DESIGN AND CONSTRUCTION CRITERIA AND GUIDELINES
METROPOLITAN GOVERNMENT OF NASHVILLE AND DAVIDSON COUNTY
DEPARTMENT OF GENERAL SERVICES
Revised January 5, 2015

TABLE OF CONTENTS

Specification Sections Provided for Inclusion in Contract Documents

01 70 00	BIM Requirements	
01 78 23	Operations & Maintenance Data	[Dated September 2014]
01 81 13	Sustainable Design Requirements	[Dated September 2014]
01 91 00	General Commissioning Requirements	[Dated January 2014]

Criteria and Guidelines (Table format) [Revised January 5, 2015]

01 00 00	General Requirements
03 00 00	Concrete
04 00 00	Masonry
05 00 00	Metals
06 00 00	Wood, Plastics, and Composites
07 00 00	Thermal and Moisture Protection
08 00 00	Openings (See Door Hardware Attachment)
09 00 00	Finishes (See Paint and Coating Attachement)
10 00 00	Specialty
11 00 00	Equipment
12 00 00	Furnishings
14 00 00	Misc Criteria for Divisions 14, 27, 28

Guide Specifications (Provided for conveyance of intent only)

14 00 00	Hydraulic Elevators

Criteria and Guidelines (First Issuance Table Format) [January 5, 2015]

21 00 00	Fire Suppression Guidelines
22 00 00	Plumbing Guidelines
23 00 00	HVAC Guidelines

Guide Specifications (Provided for conveyance of intent only)

23 08 00	Commissioning for HVAC	[Dated 09/15/2014]

Criteria and Guidelines (First Issuance Table Format) [January 5, 2015]

25 00 00	Building Automation System Guidelines
26 00 00	Electrical Guidelines

Guide Specifications (Provided for conveyance of intent only)

26 08 00	Commissioning for Electrical Systems	[Dated 09/15/2014]
27 00 00	ITS Wiring Policy	
27A	ITS General Requirements for UPS, ATS, TVSS and Generators	
27B	ITS SOP low voltage- new construction	
27C	ITS Approved Cable Vendors	[March 2014]
28 00 00	Security Guidelines	
32 00 00	Landscape Manual Guidelines	

Attachments:

A. 8-Core Key Box (diagram and product data sheet)
B. AED Plus Brochure and Defibrilator Cabinet data sheet
C. Coffee and Ice Maker connection
D. CT4000 – Car Charing Station Data Sheet
E. Outdoor Personal Hydration System
F. Summit ADA Appliance
G. Typical Break Room & Coffee Gallery Matrix
H. Typical Restroom Toilet Accessory Matrix
I. AIA Standards for Lactation Room Design
J. Civil Service rules for Lactation Rooms
K. Aluminum Flag Pole Installation Instructions
L. LEED Submittal Form (for Reference/Insertion)

How to use the Design and Construction Criteria and Guidelines Document:

This document is updated frequently to identify criteria and issues that arise from the design, construction and management of buildings under Metro General Services. This document identifies project process/ construction/maintenance procedural items as well as materiality criteria to be consider for all projects. The document shall be a guide for the Design-Builder Team, to help identify criteria unique to Metro General Services Projects. The Design-Builder Team shall follow the criteria within this document when preparing drawings and specifications, reviewing criteria with Metro as noted in the document.

Identifying Changes from Previous Issuance:

- Text that has a strike-through has been deleted since the previous issuance and will be deleted from the document at the next issuance.
- *Italic text* has been added or modified since the previous issuance and will be "un-italicized" for the next issuance.
- Punctuation, grammer and spelling corrections are not indicated.
- Numbering Revisons can occur between issuances due to other modifcations.

Additions and Revisions:

Metro Project Managers can propose additions and revisions via the "Amendment Form." Proposed Amendments will be collected by the Manager of Design and Construction, reviewed as necessary, at staff meetings with all Metro Project Managers and delivered to the Assistant Director of General Services for signature approval or recommendation. Once approved, the amendments will be incorporated into the next issuance. If any proposed amendment will effect projects currently in design and construction, a "Directive Memo" will be issued to all project teams.

BIM/CAFM Utilization

Overview:
Leverage BIM Data for post construction use within facilities systems, creating an interactive operations and maintenance manual between the BIM model and FIM software product.

Goals:
Accurately capture building asset information (manufacturer, model, location, etc.)

General Requirements:
BIM Models shall be a supplemental component of traditional O&M deliverable
Revit 2012
Multiple Models- Trade Specific
Final model(s) to be delivered in As-built condition

Models:
All models to be delivered stand alone unless otherwise specified. FIM software product can pull information from unbound models.

Expected models to be received:

- Architectural
    - Core and Shell
    - Interior Fit-out
    - Combined Architectural *(Core and Shell + Interior Fit-out)*
- Mechanical
- Electrical
- Plumbing
- Food Service
- Data

Modeling Requirements:

- Standardized naming conventions for cross software scalability
- File Names: Building number- Year - Trade
- Asset Naming
    - Families
    - Elements
    - Attributes/Properties
- All assets to have at minimum a detail level of: Manufacturer, Model, and Serial number.
- All assets to be accompanied by their appropriate; Spec sheets, Installation Manuals and Operation and Maintenance manuals in PDF format
- All assets to be placed dimensionally accurate; assets not directly bound within a room will be captured via the nearest room's area boundary

Exclusions: What information is too much information?

Model Management:
Who is responsible for the following:

- Model storage
- Model Coordination
    - Communicating model issues cross (company) team
    - Managing version control
    - Keeping file naming accurate

    - Transferring modeling content from one party to another
    - Validating content; the level of detail, naming and controls as defined in the asset list
    - Combining or linking of models
- <u>If applicable</u>
    - Coordination
    - Scheduling information
    - Sequencing
    - Estimating
    - Take-offs

Asset Requirements

Mechanical

- Air Handler
    - Manufacturer
    - Model
    - Serial Number
    - Size
    - CFM
    - Flow Ft/Min
    - Motor
        - Size
        - Amperage
        - Voltage
        - Shiv Type
    - Frame Type
    - Return/Discharge opening
- VAV Boxes
    - Manufacturer
    - Model
    - Serial Number
    - Size
    - CFM Mid/Max
    - Motor
        - Size
        - Amperage
        - Voltage
        - Shiv Type
        - Frame Type
    - Decibels
- Pumps
    - Manufacturer
    - Model
    - Serial Number
    - Size
    - Voltage
    - Amperage
    - HP
    - RPM
    - Safe Factor

    - Impeller Type
    - Shaft Size
    - Coupling
    - Seal type
    - Inlet/Outlet Size
- Diffusers
    - Manufacturer
    - Model
    - Serial Number
    - Size
    - Type
    - Adjustments
    - Rated CFM
- Thermostats
    - Action
    - Type
- Fan Power Boxes
    - Manufacturer
    - Model
    - Serial Number
    - Size
    - Rated CFM
    - Mid/Max
    - Motor
        - Size
        - Amperage
        - Voltage
        - Shiv Type
        - Frame Type
    - Blower Wheel Size
    - Transformer Volts/amps
- Absorbers
    - Manufacturer
    - Model
    - Serial Number
    - Tonnage
    - Refrigerant Type
    - Purge System
    - Electrical Feed
        - Amperage
        - Voltage
        - Tube Count
            - Condenser
            - Evaporator
    - Inlet/Outlet
- Chillers
    - Manufacturer
    - Model
    - Serial Number
    - Tonnage
    - Refrigerant Type
    - Purge System

    - Electrical Feed
        - Amperage
        - Voltage
        - Tube Count
            - Condenser
            - Evaporator
    - Inlet/Outlet
- Heat Exchangers
    - Manufacturer
    - Model
    - Serial Number
    - Type
    - Size
    - Capacity
- Cogeneration Turbines
- Condenser Boilers
    - Manufacturer
    - Model
    - Serial Number
    - Type
    - Size
    - Capacity
    - BTU's
        - Input
        - Output
    - Stack Size
    - Mod Motor Size
    - Voltage
    - Amperage
- Packaged RTU's
    - Manufacturer
    - Model
    - Serial Number
    - Type
    - Fuel Source
    - Refrigerant type
    - Size
    - Tonnage
    - Voltage
    - Amperage
- Exhaust Fans
    - Manufacturer
    - Model
    - Serial Number
    - CFM
    - Voltage
    - Amperage
    - Drive Type
- Control Valves
    - Manufacturer
    - Model
    - Serial Number

    - Type
    - Drive
    - Actuators
    - Voltage
    - Amperage
    - Flow
- Cooling Tower
    - Manufacturer
    - Model
    - Serial Number
    - Size
    - Type
    - Voltage
    - Amperage
    - Flow Rate
    - Chemical Treatment
    - Motor
- CRAC [Computer Room Air Conditioning] Units
    - Manufacturer
    - Model
    - Serial Number
    - Type
    - Size
    - Voltage
    - Amperage
    - Motor
        - Size
        - Belts
        - Filters
    - Refrigerant Type
- Chilled Beam
    - Manufacturer
    - Model
    - Serial Number
    - Type

Fire Protection

- Tamper VLV
    - Manufacturer
    - Model
    - Serial Number
    - Size
    - Type
- Flow Switch
    - Manufacturer
    - Model
    - Serial Number
    - Size
    - Type
- Dampers
    - Manufacturer
    - Model
    - Serial Number

    - Size
    - Type
- Smoke Detectors
    - Manufacturer
    - Model
    - Serial Number
    - Type
- Smoke Evacs
    - Manufacturer
    - Model
    - Serial Number
    - Size
    - Type
    - CFM
    - Voltage
    - Amperage
- Duct Detectors
    - Manufacturer
    - Model
    - Serial Number
    - Size
    - Type
    - CFM
    - Voltage
    - Amperage
- Heat Detector
    - Manufacturer
    - Model
    - Serial Number
    - Rating
- Exit Signs
    - Manufacturer
    - Model
    - Serial Number
    - Model
    - Type
    - Voltage
    - Amperage
- Pull Stations
    - Manufacturer
    - Model
    - Serial Number
- Sprinkler Heads
    - Manufacturer
    - Model
    - Serial Number
    - Type
- Fire Pumps
    - Manufacturer
    - Model
    - Serial Number
    - Size

    - Voltage
    - Amperage
    - GPM
    - Bearing Max Temp
    - Control Panel
- Fire Alarm Panel
    - Manufacturer
    - Model
    - Serial Number
    - Size
    - Type
    - Zones

Plumbing

- Fixtures
    - Manufacturer
    - Model
    - Serial Number
    - GPF/GPM
    - Type
    - Control Type
- Pumps
    - Manufacturer
    - Model
    - Serial Number
    - Size
    - Voltage
    - Amperage
    - HP
    - Rpm
    - Safe Factor
    - Impeller Type
    - Shaft Size
    - Coupling
    - Seal type
    - Inlet/Outlet Size
- Water Heaters
    - Manufacturer
    - Model
    - Serial Number
    - Size
    - Capacity
    - Drafted
    - Relief Size
    - Leak Senor/Flood Stopper
        - Manufacturer
        - Model
        - Serial Number
        - Type
- Back-Flow preventer
    - Manufacturer
    - Model
    - Serial Number

    - Size
    - Capacity
    - Pressure Differential
- Flow Regulator
    - Manufacturer
    - Model
    - Serial Number
    - Size

Electrical

- Fixtures
    - Manufacturer
    - Model
    - Serial Number
    - Lamp type
        - Quantity per fixture
        - Size
        - Wattage
        - Color
    - Ballast
        - Quantity per fixture
        - Voltage
        - Ballast Factor
    - Circuitry
    - Switch/Zone
- Occupancy Sensors
    - Manufacturer
    - Model
    - Serial Number
    - Mount type
    - Voltage
    - Amperage Rating
    - Circuitry
    - Switch/Zone
- Circuitry (Outlets, Fixtures)
- Control Panels
    - Manufacturer
    - Model
    - Serial Number
    - Quantity of circuits
        - Number Used
        - Number Available
- Switch Gear
    - Manufacturer
    - Model
    - Serial Number
    - Amps
    - Volts
    - Feeds
    - Circuit Size
    - Metered
        - Yes/no
    - Fuses

        - Size
        - Amps
        - Type
    - Wire size
- UPS
    - Manufacturer
    - Model
    - Serial Number
    - Size
        - KVA
        - KWH
    - Battery Type
    - Batter Quantity
- PDU Modules
    - Manufacturer
    - Model
    - Serial Number
    - Amps
    - Volts
    - Feeds
    - Circuit Size
    - Metered
        - Yes/no
    - Fuses
        - Size
        - Amps
        - Type
    - Wire size
- Panels
    - Manufacturer
    - Model
    - Serial Number
    - Amps
    - Volts
    - Feeds
    - Circuit Size
    - Metered
        - Yes/no
    - Fuses
        - Size
        - Amps
        - Type
    - Wire size
- Transformers
    - Manufacturer
    - Model
    - Serial Number
    - KVA
    - Wire Size
- Transfer Switches Generators
    - Manufacturer
    - Model

    - Serial Number
    - Type
    - Voltage
    - Amperage
    - Wire Size
- Generator
    - Manufacturer
    - Model
    - Serial Number
    - Fuel Type
    - Fuel Tank Size
    - Run Hours
    - KWH
    - Wire Size
- Co-Generation Equipment
    - Manufacturer
    - Model
    - Serial Number
    - Fuel Type
    - Fuel Tank Size
    - Run Hours
    - KWH
    - Wire Size

Food Service

- Sinks
    - Manufacturer
    - Model
    - Serial Number
    - GPM
    - Type
    - Control Type
- Disposals
    - Manufacturer
    - Model
    - Serial Number
    - HP
    - Voltage
    - Amperage
    - Wattage
- Refrigerators/Chillers
    - Type
    - Manufacturer
    - Model
    - Serial Number
    - Blower Coil
    - Condensing Unit
    - Refrigerant Type
    - Voltage
    - Amperage
    - Wattage
- Freezers
    - Type

    - Manufacturer
    - Model
    - Serial Number
    - Blower Coil
    - Condensing Unit
    - Refrigerant Type
    - Voltage
    - Amperage
    - Wattage
- Ice Machines
    - Type
    - Manufacturer
    - Model
    - Serial Number
    - Blower Coil
    - Condensing Unit
    - Refrigerant Type
    - inlet/outlet size
        - Cold Water
            - Domestic or Filtered
        - Waster size
    - Voltage
    - Amperage
    - Wattage
- Large Appliances –Fixed-
    - Type
    - Manufacturer
    - Model
    - Serial Number
    - Gallons Per minute
    - Inlet/outlet size
        - Hot Water
        - Cold Water
            - Domestic or Filtered
        - Gas
        - Waste
    - BTU's
    - Wattage
    - Horse Power
    - Amperage
    - Voltage
- Dispensers
    - Type
    - Manufacturer
    - Model
    - Serial Number
    - Gallons Per minute
    - PSI
    - Inlet/outlet size
        - Hot Water
        - Cold Water
            - Domestic or Filtered

            - Waste
        - Voltage
        - Amperage
- Exhaust
    - Manufacturer
    - Model
    - Serial Number
    - CFM
    - Voltage
    - Amperage
    - Drive Type
    - Stack height, Diameter
- Grease Separator
    - Type
    - Manufacturer
    - Model
    - Serial Number
    - GPH
    - Inlet/Outlet Sizes
- Ansul Unit
    - Manufacturer
    - Model
    - Serial Number
- Atlas Water System
    - Manufacturer
    - Model
    - Serial Number
    - Size
    - Type
    - Tank Sizes
    - Filters
    - Pump
        - HP
        - Flow
- Small Appliances
    - Type
    - Manufacturer
    - Model
    - Serial Number
    - Wattage
    - Horse Power
    - Amperage
    - Voltage
    - Wattage

Architectural

- Room Tags
    - MW Standard
        - Directional (ie. “NW###”)
- Areas

Architectural Finishes

- Floor Finish

    - Manufacturer
    - Model
    - Serial Number
    - Type
        - Carpet- Tile
        - Carpet- Roll
        - Ceramic- Tile
        - Concrete
        - Rubber- Tile
        - Rubber- Roll
        - Stone
        - Vinyl- Roll
        - Vinyl- Tile
        - Wood
- Wall Base
    - Manufacturer
    - Model
    - Serial Number
    - Type

- Furniture
    - Manufacturer
    - Model
    - Serial Number
    - Type/Standard
- Doors
    - Manufacturer
    - Model
    - Serial Number
    - Type
- Hardware Schedule
    - Manufacturer
    - Model
    - Serial Number
    - Type
- Window Treatment
    - Manufacturer
    - Model
    - Serial Number
- Ceiling Tile
    - Manufacturer
    - Model
    - Serial Number
    - Type
    - Size
- Paint
    - Manufacturer
    - Model
    - Color

01 78 23 - OPERATIONS AND MAINTENANCE DATA

PART 1 - GENERAL

1.01 SUMMARY

A. Section includes administrative and procedural requirements for preparing operation and maintenance manuals, including the following:

1. Operation and maintenance documentation directory.
2. Emergency manuals.
3. Operation manuals for systems, subsystems, and equipment.
4. Product maintenance manuals.
5. Systems and equipment maintenance manuals.

B. Related Requirements:

1. Division 01 Section "Multiple Contract Summary" for coordinating operation and maintenance manuals covering the Work of multiple contracts.
2. Division 01 Section "Submittal Procedures" for submitting copies of submittals for operation and maintenance manuals.
3. Division 01 Section "General Commissioning Requirements" for verification and compilation of data into operation and maintenance manuals.
4. Divisions 02 through 33 Sections for specific operation and maintenance manual requirements for the Work in those Sections.

1.02 DEFINITIONS

A. System: An organized collection of parts, equipment, or subsystems united by regular interaction.

B. Subsystem: A portion of a system with characteristics similar to a system.

1.03 CLOSEOUT SUBMITTALS

A. Manual Content: Operations and maintenance manual content is specified in individual Specification Sections to be reviewed at the time of Section submittals. Submit reviewed manual content formatted and organized as required by this Section.

1. Architect and Commissioning Authority (CxA) will comment on whether content of operations and maintenance submittals are acceptable.
2. Where applicable, clarify and update reviewed manual content to correspond to revisions and field conditions.

B. Format: Submit operations and maintenance manuals in the following format:

1. PDF electronic file. Assemble each manual into a composite electronically indexed file. Submit on digital media acceptable to Architect.

   a. Name each indexed document file in composite electronic index with applicable item name. Include a complete electronically linked operation and maintenance directory.

b. Enable inserted reviewer comments on draft submittals.

2. One paper copy. Include a complete operation and maintenance directory. Enclose title pages and directories in clear plastic sleeves.

C. Initial Manual Submittal: Submit a draft paper copy of the manual at least thirty (30) days before commencing demonstration and training. Architect and CxA will comment on whether general scope and content of manual are acceptable.

D. Final Manual Submittal: Submit each manual in final form prior to requesting inspection for Substantial Completion and at least fifteen (15) days before commencing demonstration and training. Architect and Commissioning Authority will return copy with comments.

1. Correct or revise each manual to comply with Architect's and Commissioning Authority's comments. Submit copies of each corrected manual within fifteen (15) days of receipt of Architect's and Commissioning Authority's comments and prior to commencing demonstration and training.

PART 2 - PRODUCTS

2.01 REQUIREMENTS FOR OPERATION AND MAINTENANCE MANUALS

A. Organization: Unless otherwise indicated, organize each manual into a separate section for each system and subsystem, and a separate section for each piece of equipment not part of a system. Each manual shall contain the following materials, in the order listed:

1. Title page.

2. Table of contents.

3. Manual contents.

B. Title Page: Include the following information:

1. Subject matter included in manual.

2. Name and address of Project.

3. Name and address of Owner.

4. Date of submittal.

5. Name and contact information for Contractor.

6. Name and contact information for Construction Manager.

7. Name and contact information for Architect.

8. Names and contact information for major consultants to the Architect that designed the systems contained in the manuals.

9. Cross-reference to related systems in other operation and maintenance manuals.

C. Table of Contents: List each product included in manual, identified by product name, indexed to the content of the volume, and cross-referenced to Specification Section number in Project Manual.

1. If operation or maintenance documentation requires more than one volume to accommodate data, include comprehensive table of contents for all volumes in each volume of the set.

D. Manual Contents: Organize into sets of manageable size. Arrange contents alphabetically by system, subsystem, and equipment. If possible, assemble instructions for subsystems, equipment, and components of one system into a single binder.

E. Manuals, Electronic Files: Submit manuals in the form of a multiple file composite electronic PDF file for each manual type required.

1. Electronic Files: Use electronic files prepared by manufacturer where available. Where scanning of paper documents is required, configure scanned file for minimum readable file size.

2. File Names and Bookmarks: Enable bookmarking of individual documents based on file names. Name document files to correspond to system, subsystem, and equipment names used in manual directory and table of contents. Group documents for each system and subsystem into individual composite bookmarked files, then create composite manual, so that resulting bookmarks reflect the system, subsystem, and equipment names in a readily navigated file tree. Configure electronic manual to display bookmark panel on opening file.

F. Manuals, Paper Copy: Submit manuals in the form of hard copy, bound and labeled volumes.

1. Binders: Heavy-duty, three-ring, vinyl-covered, loose-leaf binders, in thickness necessary to accommodate contents, sized to hold 8-1/2-by-11-inch (215-by-280-mm) paper; with clear plastic sleeve on spine to hold label describing contents and with pockets inside covers to hold folded oversize sheets.

a. If two or more binders are necessary to accommodate data of a system, organize data in each binder into groupings by subsystem and related components. Cross-reference other binders if necessary to provide essential information for proper operation or maintenance of equipment or system.

b. Identify each binder on front and spine, with printed title "OPERATION AND MAINTENANCE MANUAL," Project title or name, and subject matter of contents, and indicate Specification Section number on bottom of spine. Indicate volume number for multiple-volume sets.

2. Dividers: Heavy-paper dividers with plastic-covered tabs for each section of the manual. Mark each tab to indicate contents. Include typed list of products and major components of equipment included in the section on each divider, cross-referenced to Specification Section number and title of Project Manual.

3. Protective Plastic Sleeves: Transparent plastic sleeves designed to enclose diagnostic software storage media for computerized electronic equipment.

4. Supplementary Text: Prepared on 8-1/2-by-11-inch (215-by-280-mm) white bond paper.

5. Drawings: Attach reinforced, punched binder tabs on drawings and bind with text.

a. If oversize drawings are necessary, fold drawings to same size as text pages and use as foldouts.

b. If drawings are too large to be used as foldouts, fold and place drawings in labeled envelopes and bind envelopes in rear of manual. At appropriate locations in manual, insert typewritten pages indicating drawing titles, descriptions of contents, and drawing locations.

2.02 SYSTEMS MANUALS

A. Content: In addition to requirements in this Section, include operation data required in individual Specification Sections and the following information:

1. System, subsystem, and equipment descriptions. Use designations for systems and equipment indicated on Contract Documents.
2. Approved submittals for equipment and components for each system.
3. Performance and design criteria.
4. Operating standards.
5. Operating procedures.
6. Operating logs.
7. Wiring diagrams.
8. Control diagrams.
9. Piped system diagrams.
10. Precautions against improper use.
11. License requirements including inspection and renewal dates.

B. Descriptions: Include the following:

1. Product name and model number. Use designations for products indicated on Contract Documents.
2. Manufacturer's name.
3. Equipment identification with serial number of each component.
4. Equipment function.
5. Operating characteristics.
6. Limiting conditions.
7. Performance curves.
8. Engineering data and tests.
9. Complete nomenclature and number of replacement parts.

C. Operating Procedures: Include the following, as applicable:

1. Startup procedures.
2. Equipment or system break-in procedures.
3. Routine and normal operating instructions.
4. Setpoints for normal (“occupied”) and/or set back (“unoccupied”) conditions
5. Regulation and control procedures.
6. Instructions on stopping.

7. Normal shutdown instructions.

8. Seasonal and weekend operating instructions.

9. Required sequences for electric or electronic systems.

10. Special operating instructions and procedures.

D. Systems and Equipment Controls: Describe the sequence of operation, and diagram controls as installed.

E. Piped Systems: Diagram piping as installed, and identify color-coding where required for identification.

2.03 PRODUCT MAINTENANCE MANUALS

A. Content: Organize manual into a separate section for each product, material, and finish. Include source information, product information, maintenance procedures, repair materials and sources, and warranties and bonds, as described below.

B. Source Information: List each product included in manual, identified by product name and arranged to match manual's table of contents. For each product, list name, address, and telephone number of Installer or supplier and maintenance service agent, and cross-reference Specification Section number and title in Project Manual and drawing or schedule designation or identifier where applicable.

C. Product Information: Include the following, as applicable:

1. Product name and model number.

2. Manufacturer's name.

3. Color, pattern, and texture.

4. Material and chemical composition.

5. Reordering information for specially manufactured products.

D. Maintenance Procedures: Include manufacturer's written recommendations and the following:

1. Inspection procedures.

2. Types of cleaning agents to be used and methods of cleaning.

3. List of cleaning agents and methods of cleaning detrimental to product.

4. Schedule for routine cleaning and maintenance.

5. Repair instructions.

E. Repair Materials and Sources: Include lists of materials and local sources of materials and related services.

F. Warranties and Bonds: Include copies of warranties and bonds and lists of circumstances and conditions that would affect validity of warranties or bonds.

1. Include procedures to follow and required notifications for warranty claims.

2.04 SYSTEMS AND EQUIPMENT MAINTENANCE MANUALS

A. Content: For each system, subsystem, and piece of equipment not part of a system, include source information, manufacturers' maintenance documentation, maintenance procedures, maintenance and service schedules, spare parts list and source information, maintenance service contracts, and warranty and bond information, as described below.

B. Source Information: List each system, subsystem, and piece of equipment included in manual, identified by product name and arranged to match manual's table of contents. For each product, list name, address, and telephone number of Installer or supplier and maintenance service agent, and cross-reference Specification Section number and title in Project Manual and drawing or schedule designation or identifier where applicable.

C. Manufacturers' Maintenance Documentation: Manufacturers' maintenance documentation including the following information for each component part or piece of equipment:

1. Standard maintenance instructions and bulletins.

2. Drawings, diagrams, and instructions required for maintenance, including disassembly and component removal, replacement, and assembly.

3. Identification and nomenclature of parts and components.

4. List of items recommended to be stocked as spare parts.

D. Maintenance Procedures: Include the following information and items that detail essential maintenance procedures:

1. Test and inspection instructions.

2. Troubleshooting guide.

3. Precautions against improper maintenance.

4. Disassembly; component removal, repair, and replacement; and reassembly instructions.

5. Aligning, adjusting, and checking instructions.

6. Demonstration and training video recording, if available.

7. List of cleaning agents and methods of cleaning detrimental to equipment.

E. Maintenance and Service Schedules: Include service and lubrication requirements, list of required lubricants for equipment, and separate schedules for preventive and routine maintenance and service with standard time allotment.

1. Scheduled Maintenance and Service: Tabulate actions for daily, weekly, monthly, quarterly, semiannual, and annual frequencies.

2. Maintenance and Service Record: Include manufacturers' forms for recording maintenance.

F. Spare Parts List and Source Information: Include lists of replacement and repair parts, with parts identified and cross-referenced to manufacturers' maintenance documentation and local sources of maintenance materials and related services.

G. Maintenance Service Contracts: Include copies of maintenance agreements with name and telephone number of service agent.

H. Warranties and Bonds: Include copies of warranties and bonds and lists of circumstances and conditions that would affect validity of warranties or bonds.

1. Include procedures to follow and required notifications for warranty claims.

PART 3 - EXECUTION

3.01 MANUAL PREPARATION

A. Emergency Manual: Assemble a complete set of emergency information indicating procedures for use by emergency personnel and by Owner's operating personnel for types of emergencies indicated.

B. Product Maintenance Manual: Assemble a complete set of maintenance data indicating care and maintenance of each product, material, and finish incorporated into the Work.

C. Operation and Maintenance Manuals: Assemble a complete set of operation and maintenance data indicating operation and maintenance of each system, subsystem, and piece of equipment not part of a system.

1. Engage a factory-authorized service representative to assemble and prepare information for each system, subsystem, and piece of equipment not part of a system.

2. Prepare a separate manual for each system and subsystem, in the form of an instructional manual for use by Owner's operating personnel.

D. Manufacturers' Data: Where manuals contain manufacturers' standard printed data, include only sheets pertinent to product or component installed. Mark each sheet to identify each product or component incorporated into the Work. If data include more than one item in a tabular format, identify each item using appropriate references from the Contract Documents. Identify data applicable to the Work and delete references to information not applicable.

1. Prepare supplementary text if manufacturers' standard printed data are not available and where the information is necessary for proper operation and maintenance of equipment or systems.

E. Drawings: Prepare drawings supplementing manufacturers' printed data to illustrate the relationship of component parts of equipment and systems and to illustrate control sequence and flow diagrams. Coordinate these drawings with information contained in record Drawings to ensure correct illustration of completed installation.

1. Do not use original project record documents as part of operation and maintenance manuals.

2. Comply with requirements of newly prepared record Drawings in Division 01 Section "Project Record Documents."

F. Comply with Division 01 Section "Closeout Procedures" for schedule for submitting operation and maintenance documentation.

END OF SECTION

SECTION 01 8113 - SUSTAINABLE DESIGN REQUIREMENTS

PART 1 GENERAL

1.01 RELATED DOCUMENTS

A. Drawings and general provisions of the Contract, including General and Supplementary Conditions and other Division 01 Specification Sections, apply to this Section.

1.02 SUMMARY

A. Section includes general requirements and procedures for compliance with certain USGBC LEED prerequisites and credits needed for Project to obtain LEED Silver certification based on the most applicable LEED rating system.
   1. Other LEED prerequisites and credits needed to obtain LEED certification depend on product selections and may not be specifically identified as LEED requirements. Compliance with requirements needed to obtain LEED prerequisites and credits may be used as one criterion to evaluate substitution requests and comparable product requests.
   2. Additional LEED prerequisites and credits needed to obtain the indicated LEED certification depend on Architect's design and other aspects of Project that are not part of the Work of the Contract.
   3. A copy of the LEED Project checklist is attached at the end of this Section for information only.

B. Specific requirements for LEED are included in greater detail in other Sections.

1.03 ADMINISTRATIVE REQUIREMENTS

A. Metro General Services will complete LEED project registration for the Project and “invite” designated project team members to join the LEED Online portal.

B. A design phase Integrated Design Charrette shall be conducted prior to the Construction Documents Phase.

C. Metro General Services will provide a LEED Project Administrator that will manage the completion of all LEED Online templates. Design team cooperation in this effort is required including provision of design calculations or other documentation required to demonstrate compliance with identified LEED credits.

D. Prior to the start of construction, conduct a pre-construction LEED coordination meeting to review expectations and requirements. Project team members including key sub-contractor trades are required to attend.

E. This project will include building systems commissioning activities which are also required for the LEED certification process. Metro General Services will provide a commissioning agent (CxA). Contractor is required to coordinate and include activities in the construction schedule.

F. Metro General Services will conduct Air Contaminant Testing after construction but prior to occupancy. Contractor is required to coordinate and include activities in the construction schedule.

G. With assistance from the Project Team, Metro General Services will develop an Owner’s Project Requirements (OPR) document for Project Team review and action.

H. The Project Team is required to provide a written response to the issued Owner’s Project Requirements (OPR) document in the form of a Basis of Design (BoD) document. Project Team shall address how each item in the OPR will be addressed in the project design. Update the BoD as required.

I. Respond to questions and requests from Architect and the USGBC regarding LEED credits that are the responsibility of the Contractor, that depend on product selection or product qualities, or that depend on Contractor's procedures until the USGBC has

made its determination on the project's LEED certification application. Document responses as informational submittals.

J. A LEED Project Responsibility Matrix is included at the end of this Section.

1.04 ACTION SUBMITTALS

A. General: Submit additional LEED submittals required by other Specification Sections.

B. LEED submittals are in addition to other submittals and shall be submitted concurrent with the shop drawing/product data review process. If submitted item is identical to that submitted to comply with other requirements, highlight requested information to verify compliance with indicated LEED requirements.

1.05 INFORMATIONAL SUBMITTALS

C. Project Materials Cost Data: Provide statement indicating total cost for materials used for Project. Costs exclude labor, overhead, and profit. Include breakout of costs for the following categories of items:
   1. Furniture.
   2. Plumbing.
   3. Mechanical.
   4. Electrical.
   5. Specialty items such as elevators and equipment.

D. LEED Action Plans: Provide preliminary submittals within 30 days of date established for commencement of the Work indicating how the following requirements will be met:
   1. Credit MR 4, MR5 [MR 6 & MR 7, if applicable] : Recycled content and Regional Materials, [Rapidly Renewable, Certified Wood]
      a. List of proposed materials with recycled content. Indicate cost, post-consumer recycled content, and pre-consumer recycled content for each product having recycled content.
      b. List of proposed regional materials. Identify each regional material, including its source,cost, and the fraction by weight that is considered regional.
   2. Credit MR 2: Waste Management Plan
      a. Waste Management Plan: Include the following information:
         1. Analysis of the trash and waste projected to be generated during the entire project construction cycle, including types and quantities.
         2. Landfill Options: The name, address, and telephone number of the landfill(s) where trash/waste will be disposed of, the applicable landfill tipping fee(s), and the projected cost of disposing of all project trash/waste in the landfill(s).
         3. Landfill Alternatives: List all waste materials that will be diverted from landfills by reuse, salvage, or recycling.
         4. Meetings: Describe regular meetings to be held to address waste prevention, reduction, recycling, salvage, reuse, and disposal.
         5. Materials Handling Procedures: Describe the means by which materials to be diverted from landfills will be protected from contamination and prepared for acceptance by designated facilities; include separation procedures for recyclables, storage, and packaging.
      b. Waste Disposal Reports: Submit at specified intervals, with details of quantities of trash and waste, means of disposal or reuse; show both totals to date and since last report.

1. Submit updated Report with each Application for Progress Payment or at an agreed to time-point on a monthly basis; failure to submit Report will delay payment.
2. Submit Report on a form acceptable to Owner.
3. Landfill Disposal: Include the following information:
    a. Identification of material.
    b. Amount, in tons or cubic yards, of trash/waste material from the project disposed of in landfills.
    c. State the identity of landfills, total amount of tipping fees paid to landfill.
    d. Include manifests, weight tickets, receipts, and invoices as evidence of quantity.
4. Recycled and Salvaged, Re-Used Materials: Include the following information for each:
    a. Identification of material, including those retrieved by installer for use on other projects.
    b. Amount, in tons or cubic yards, date removed from the project site, and receiving party.
    c. Include manifests, weight tickets, receipts, and invoices as evidence of quantity.
    d. Certification by receiving party that materials will not be disposed of in landfills or by incineration.

3. Credit IEQ 3.1: Construction indoor-air-quality management plan.
    a. Indoor Air Quality Management Plan: Describe in detail measures to be taken to promote adequate indoor air quality upon completion; use SMACNA IAQ Guidelines for Occupied Buildings Under Construction as a guide.
        1. Identify potential sources of odor and dust.
        2. Identify construction activities likely to produce odor or dust.
        3. Identify areas of project potentially affected, especially occupied areas.
        4. Evaluate potential problems by severity and describe methods of control.
        5. Describe construction ventilation to be provided, including type and duration of ventilation, use of permanent HVAC systems, types of filters and schedule for replacement of filters.
        6. Describe cleaning and dust control procedures.
    b. Interior Finishes Installation Schedule: Identify each interior finish that either generates odors, moisture, or vapors or is susceptible to adsorption of odors and vapors, and indicate air handling zone, sequence of application, and curing times.
    c. Air Contaminant Test Plan: Identify:
        i. Testing agency qualifications.
        ii. Locations and scheduling of air sampling.
        iii. Test procedures, in detail.
        iv. Test instruments and apparatus.
        v. Sampling methods.
    d. Air Contaminant Test Reports: Show:
        i. Location where each sample was taken, time taken, and duration of test.

ii. Test values for each air sample
iii. HVAC operating conditions.
iv. Certification of test equipment calibration.
v. Other conditions or discrepancies that might have influenced results.

PART 2 PRODUCTS

2.01 MATERIALS, GENERAL

A. Provide products and procedures necessary to obtain LEED credits required in this Section. Although other Sections may specify some requirements that contribute to LEED credits, the Contractor shall determine additional materials and procedures necessary to obtain LEED credits indicated.

2.02 RECYCLED CONTENT OF MATERIALS

A. Credit MR 4: Building materials shall have recycled content such that post-consumer recycled content plus one-half of pre-consumer recycled content for Project constitutes a minimum of 10 percent of cost of materials used for Project.
B. Cost of post-consumer recycled content plus one-half of pre-consumer recycled content of an item shall be determined by dividing weight of post-consumer recycled content plus one-half of pre-consumer recycled content in the item by total weight of the item and multiplying by cost of the item.
C. Do not include furniture, plumbing, mechanical and electrical components, and specialty items such as elevators and equipment in the calculation.

2.03 REGIONAL MATERIALS

A. Credit MR 5: Not less than 10 percent of building materials (by cost) shall be regional materials.
B. Regional Materials: Materials that have been extracted, harvested, or recovered, as well as manufactured, within 500 miles (800 km) of Project site. If only a fraction of a product or material is extracted/harvested/recovered and manufactured locally, then only that percentage (by weight) shall contribute to the regional value.

2.04 CONSTRUCTION WASTE MANAGEMENT REQUIREMENTS

A. Credit MR 2: "Construction Waste Management and Disposal."
1. Owner requires that this project generate the least amount of trash and waste possible.
2. LEED Certification for this project is dependent on diversion of not less than 50 percent, by weight or volume, of potential landfill trash/waste by recycling and/or salvage.
3. Employ processes that ensure the generation of as little waste as possible due to error, poor planning, breakage, mishandling, contamination, or other factors
4. Contractor shall submit periodic Waste Disposal Reports; all landfill disposal, incineration, recycling, salvage, and reuse must be reported regardless of to whom the cost or savings accrues; use the same units of measure on all reports.
5. Contractor shall develop and follow a Waste Management Plan designed to implement these requirements.
6. Required Recycling, Salvage, and Reuse: The following may not be disposed of in landfills or by incineration:
a. Aluminum and plastic beverage containers.
b. Corrugated cardboard.
c. Wood pallets.
d. Clean dimensional wood: May be used as blocking or furring.
e. Land clearing debris, including brush, branches, logs, and stumps

f. Metals, including packaging banding, metal studs, sheet metal, structural steel, piping, reinforcing bars, door frames, and other items made of steel, iron, galvanized steel, stainless steel, aluminum, copper, zinc, lead, brass, and bronze.
g. Glass
h. Gypsum drywall and plaster

2.05 Low Emitting Materials

A. Credit IEQ 4.1: For field applications that are inside the weatherproofing system, adhesives and sealants shall comply with the following VOC content limits when calculated according to 40 CFR 59, Subpart D (EPA Method 24):
1. Wood Glues: 30 g/L.
2. Metal-to-Metal Adhesives: 30 g/L.
3. Adhesives for Porous Materials (Except Wood): 50 g/L.
4. Subfloor Adhesives: 50 g/L.
5. Plastic Foam Adhesives: 50 g/L.
6. Carpet Adhesives: 50 g/L.
7. Carpet Pad Adhesives: 50 g/L.
8. VCT and Asphalt Tile Adhesives: 50 g/L.
9. Cove Base Adhesives: 50 g/L.
10. Gypsum Board and Panel Adhesives: 50 g/L.
11. Rubber Floor Adhesives: 60 g/L.
12. Ceramic Tile Adhesives: 65 g/L.
13. Multipurpose Construction Adhesives: 70 g/L.
14. Fiberglass Adhesives: 80 g/L.
15. Contact Adhesive: 80 g/L.
16. Structural Glazing Adhesives: 100 g/L.
17. Wood Flooring Adhesive: 100 g/L.
18. Structural Wood Member Adhesive: 140 g/L.
19. Single-Ply Roof Membrane Adhesive: 250 g/L.
20. Special-Purpose Contact Adhesive (contact adhesive that is used to bond melamine-covered board, metal, unsupported vinyl, rubber, or wood veneer 1/16 inch or less in thickness to any surface): 250 g/L.
21. Top and Trim Adhesive: 250 g/L.
22. Plastic Cement Welding Compounds: 250 g/L.
23. ABS Welding Compounds: 325 g/L.
24. CPVC Welding Compounds: 490 g/L.
25. PVC Welding Compounds: 510 g/L.
26. Adhesive Primer for Plastic: 550 g/L.
27. Sheet-Applied Rubber Lining Adhesive: 850 g/L.
28. Aerosol Adhesive, General-Purpose Mist Spray: 65 percent by weight.
29. Aerosol Adhesive, General-Purpose Web Spray: 55 percent by weight.
30. Special-Purpose Aerosol Adhesive (All Types): 70 percent by weight.
31. Other Adhesives: 250 g/L.
32. Architectural Sealants: 250 g/L.
33. Nonmembrane Roof Sealants: 300 g/L.
34. Single-Ply Roof Membrane Sealants: 450 g/L.
35. Other Sealants: 420 g/L.
36. Sealant Primers for Nonporous Substrates: 250 g/L.
37. Sealant Primers for Porous Substrates: 775 g/L.

38. Modified Bituminous Sealant Primers: 500 g/L.
39. Other Sealant Primers: 750 g/L.

B. Credit IEQ 4.2: For field applications that are inside the weatherproofing system, paints and coatings shall comply with the following VOC content limits when calculated according to 40 CFR 59, Subpart D (EPA Method 24):
1. Flat Paints and Coatings: VOC not more than 50 g/L.
2. Nonflat Paints and Coatings: VOC not more than 150 g/L.
3. Dry-Fog Coatings: VOC not more than 400 g/L.
4. Primers, Sealers, and Undercoaters: VOC not more than 200 g/L.
5. Anticorrosive and Antirust Paints Applied to Ferrous Metals: VOC not more than 250 g/L.
6. Zinc-Rich Industrial Maintenance Primers: VOC not more than 340 g/L.
7. Pretreatment Wash Primers: VOC not more than 420 g/L.
8. Clear Wood Finishes, Varnishes: VOC not more than 350 g/L.
9. Clear Wood Finishes, Lacquers: VOC not more than 550 g/L.
10. Floor Coatings: VOC not more than 100 g/L.
11. Shellacs, Clear: VOC not more than 730 g/L.
12. Shellacs, Pigmented: VOC not more than 550 g/L.
13. Stains: VOC not more than 250 g/L.

C. Carpet and Adhesive: Provide products having VOC content not greater than that required for CRI Green Label Plus certification.
1. Evidence of Compliance: Acceptable types of evidence are:
a. Current Green Label Plus Certification.
b. Report of laboratory testing performed in accordance with requirements.

D. Carpet Tile and Adhesive: Provide products having VOC content not greater than that required for CRI Green Label Plus certification.
1. Evidence of Compliance: Acceptable types of evidence are:
a. Current Green Label Plus Certification.
b. Report of laboratory testing performed in accordance with requirements.

E. Credit IEQ 4.4: Composite wood, agrifiber products, and adhesives shall not contain urea-formaldehyde resin.

PART 3 EXECUTION

3.01 CONSTRUCTION WASTE MANAGEMENT

A. Credit MR 2: "Construction Waste Management and Disposal."
1. Manager: Designate an on-site person or persons responsible for instructing workers and overseeing and documenting results of the Waste Management Plan.
2. Communication: Distribute copies of the Waste Management Plan to job site foreman, each subcontractor, Owner, and Architect.
3. Instruction: Provide on-site instruction of appropriate separation, handling, and recycling, salvage, reuse, and return methods to be used by all parties at the appropriate stages of the project.
4. Meetings: Discuss trash/waste management goals and issues at project meetings.
a. Pre-bid meeting.
b. Pre-construction meeting.
c. Regular job-site meetings.

5. Facilities: Provide specific facilities for separation and storage of materials for recycling, salvage, reuse, return, and trash disposal, for use by all contractors and installers.
   a. Provide containers as required.
   b. Provide adequate space for pick-up and delivery and convenience to subcontractors.
   c. Keep recycling and trash/waste bin areas neat and clean and clearly marked in order to avoid contamination of materials.
   d. Hazardous Wastes: Separate, store, and dispose of hazardous wastes according to applicable regulations.
6. Recycling: Separate, store, protect, and handle at the site identified recyclable waste products in order to prevent contamination of materials and to maximize recyclability of identified materials. Arrange for timely pickups from the site or deliveries to recycling facility in order to prevent contamination of recyclable materials.
7. Reuse of Materials On-Site: Set aside, sort, and protect separated products in preparation for reuse.
8. Salvage: Set aside, sort, and protect products to be salvaged for reuse off-site.

3.02 CONSTRUCTION INDOOR-AIR-QUALITY MANAGEMENT

A. Credit IEQ 3.1: Comply with SMACNA's "SMACNA IAQ Guideline for Occupied Buildings under Construction."
   1. If Owner authorizes use of permanent heating, cooling, and ventilating systems during construction period as specified in Section "Temporary Facilities and Controls," install filter media having a MERV 8 according to ASHRAE 52.2 at each return-air inlet for the air-handling system used during construction.
   2. Replace all air filters immediately prior to occupancy.
   3. Prevent the absorption of moisture and humidity by adsorptive materials by:
      a. Sequencing the delivery of such materials so that they are not present in the building until wet work is completed and dry.
      b. Delivery and storage of such materials in fully sealed moisture-impermeable packaging.
      c. Provide sufficient ventilation for drying within reasonable time frame.
   4. Air ductwork to be delivered with sealed ends and ductwork ends to be sealed as installed, until operationals and filtration media of Merv 8 can be installed.
   5. Begin construction ventilation when building is substantially enclosed.
   6. If extremely dusty or dirty work must be conducted inside the building, shut down HVAC systems for the duration; remove dust and dirt completely before restarting systems.
   7. HVAC equipment and supply air ductwork may be used for ventilation during construction:
   8. Ensure that air filters are correctly installed prior to starting use; replace filters when they lose efficiency.
   9. Where return air ducts must be used for ventilation, install auxiliary filters at return inlets, sealed to ducts; use filters with at least the equivalent efficiency as those required at supply air side; inspect and replace filters when they lose efficiency.
   10. Do not store construction materials or waste in mechanical or electrical rooms.
   11. Prior to use of return air ductwork without intake filters clean up and remove dust and debris generated by construction activities.

a. Inspect duct intakes, return air grilles, and terminal units for dust.
b. Clean plenum spaces, including top sides of lay-in ceilings, outsides of ducts, tops of pipes and conduit.
c. Clean tops of doors and frames.
d. Clean mechanical and electrical rooms, including tops of pipes, ducts, and conduit, equipment, and supports.
e. Clean return plenums of air handling units.
f. Remove intake filters last, after cleaning is complete.
g. Do not perform dusty or dirty work after starting use of return air ducts without intake filters.
h. Use other relevant recommendations of SMACNA IAQ Guideline for Occupied Buildings Under construction for avoiding unnecessary contamination due to construction procedures.

3.03 AIR CONTAMINANT TESTING

A. Air contaminant testing is required and will be conducted by Metro General Services. Contractor is required to coordination activities and scheduling for timely completion.
B. Perform air contaminant testing before occupancy.
C. Do not start air contaminant testing until:
   1. All construction is complete, including interior finishes.
   2. HVAC systems have been tested, adjusted, and balanced for proper operation.
   3. New HVAC filtration media have been installed.
D. Indoor Air Samples: Collect from spaces representative of occupied areas:
   1. Collect samples while operable windows and exterior doors are closed, HVAC system is running normally as if occupied, with design minimum outdoor air, but with the building unoccupied.
   2. Collect samples from spaces in each contiguous floor area in each air handler zone, but not less than one sample per 25,000 square feet; take samples from areas having the least ventilation and those having the greatest presumed source strength.
   3. Collect samples from height from 36 inches to 72 inches above floor.
   4. Collect samples for 4-hour durations.
   5. When retesting the same building areas, take samples from at least the same locations as in first test.
E. Outdoor Air Samples: Collect samples at outside air intake of each air handler at the same time as indoor samples are taken.
F. Analyze air samples and submit report.
G. Air Contaminant Concentration Determination and Limits:
   1. Carbon Monoxide: Not more than 9 parts per million and not more than 2 parts per million higher than outdoor air.
   2. Airborne Mold and Mildew: Measure in relation to outside air; not higher than outside air.
   3. Formaldehyde: Not more than 27 parts per billion (max.)
   4. Total Volatile Organic Compounds (TVOC): Not more than 500 micrograms per cubic meter.
   5. Particulates (PM10): Not more than 50 micrograms per cubic meter.

P	Primary Role
S	Support Role
R	Review Only

Department of General Services
LEED Project Responsibility Matrix

Reference	Task	Metro General Services	Metro - LEED Consultant	Design-Build Team	Commissioning Agent
1.02	Prepare Preliminary LEED Project Checklist		R	P	
1.03	Complete LEED project registration with GBCI		P		
1.03	Respond to questions from GBCI/USGBC during Review Process		P	S	S
1.03	Manage completion of LEED Online Templates		P	S	S
1.03	Conduct Pre-Construction LEED Coordination meeting with key trades and sub-contractors		P	S	
1.03	Include Commissioning and Air Contaminant Testing activities in construction schedule	R	R	P	S
1.03	Initiate a draft Owner's Project Requirements (OPR) document and distribute to Project team	S	S	S	P
1.03	Provide a written Basis of Design (BoD) document at the end of DDP and CDP (with updates as needed) with project team responses to items included in the OPR	R	R	P	R
1.05	Provide completed LEED Submittal Form concurrent with shop drawing/product data review process		R	P	
1.05	Prepare Action Plan indicating plan for achieving Recycled Content, Regional Materials, and Certified Wood credit thresholds		R	P	
1.05	Prepare Waste Management Plan		R	P	
1.05	Submit waste and landfill diversion summary reports		R	P	
1.05	Prepare Construction Indoor Air Quality Management Plan		R	P	
1.05	Prepare Air Contaminant Test Plan	P	S	R	
3.02	Implement Construction Indoor Air Quality Plan			P	
3.03	Conduct Air Contaminant Testing after construction is complete but prior to occupancy	P		S	

END OF SECTION

01 91 00 - GENERAL COMMISSIONING REQUIREMENTS

PART 1 - GENERAL

1.01 RELATED DOCUMENTS

A. Drawings and general provisions of the Contract, including General and Supplementary Conditions and other Division 1 Specification Sections, apply to this Section.

B. OPR and BoD documentation are included by reference for information only.

1.02 SUMMARY

A. Section includes general requirements that apply to implementation of commissioning without regard to specific systems, assemblies, or components.

B. Related Sections:

1. Division 1 Section 23 08 00 Commissioning for HVAC for commissioning process activities for HVAC systems, assemblies, equipment, and components.

2. Division 1 Section 26 08 00 Electrical Systems Commissioning for commissioning process activities for electrical systems, assemblies, equipment, and components

1.03 DEFINITIONS

A. BOD: Basis of Design. A document that records concepts, calculations, decisions, and product selections used to meet the OPR and to satisfy applicable regulatory requirements, standards, and guidelines. The document includes both narrative descriptions and lists of individual items that support the design process.

B. Commissioning Plan: A document that outlines the organization, schedule, allocation of resources, and documentation requirements of the commissioning process.

C. CxA: Commissioning Authority.

D. OPR: Owner's Project Requirements. A document that details the functional requirements of a project and the expectations of how it will be used and operated. These include Project goals, measurable performance criteria, cost considerations, benchmarks, success criteria, and supporting information.

E. Systems, Subsystems, Equipment, and Components: Where these terms are used together or separately, they shall mean "as-built" systems, subsystems, equipment, and components.

1.04 COMMISSIONING TEAM

A. Members Appointed by Contractor(s): Individuals, each having the authority to act on behalf of the entity he or she represents, explicitly organized to implement the commissioning process through coordinated action. The commissioning team shall consist of, but not be limited to, representatives of the General Contractor, including Project superintendent and subcontractors, installers, suppliers, and specialists deemed appropriate by the CxA.

B. Members Appointed by Owner:

1. CxA: The designated person, company, or entity that plans, schedules, and coordinates the commissioning team to implement the commissioning process. Owner will engage the CxA under a separate contract.

2. Representatives of the facility user and operation and maintenance personnel.

3. Architect and engineering design professionals.

1.05 OWNER'S RESPONSIBILITIES

A. Provide the OPR documentation to the CxA and General Contractor for information and use.

B. Assign operation and maintenance personnel and schedule them to participate in commissioning team activities.

C. Provide the BoD documentation, prepared by Architect and approved by Owner, to the CxA and General Contractor for use in developing the commissioning plan, systems manual, and operation and maintenance training plan.

1.06 GENERAL CONTRACTOR'S RESPONSIBILITIES

A. General Contractor shall assign representatives with expertise and authority to act on its behalf and shall schedule them to participate in and perform commissioning process activities including, but not limited to, the following:

1. Evaluate performance deficiencies identified in test reports and, in collaboration with entity responsible for system and equipment installation, recommend corrective action.

2. Cooperate with the CxA for resolution of issues recorded in the Issues Log.

3. Attend commissioning team meetings held as scheduled by the CxA.

4. Integrate and coordinate commissioning process activities with construction schedule.

5. Review and accept construction checklists provided by the CxA.

6. Complete construction checklists as Work is completed and provide to the Commissioning Authority on a weekly basis.

7. Review and accept commissioning process test procedures provided by the Commissioning Authority.

8. Complete commissioning process functional test procedures.

9. Complete Owner training as described in the contract documents; provide documentation of completed training to the CxA.

10. Assist the CxA in the procurement of operations and maintenance documents, closeout documentation, warranty information, etc. as described in the closeout procedures in the contract documents.

1.07 CxA'S RESPONSIBILITIES

A. Organize and lead the commissioning team.

B. Provide Commissioning Plan.

C. Convene commissioning team meetings.

D. Provide Project-specific construction checklists and commissioning process functional test procedures.

E. Verify the execution of commissioning process activities using random sampling. The sampling rate may vary from 1 to 100 percent, and will be specified in the Commissioning Plan for each system.

F. Prepare and maintain the Commissioning Issues Log.

G. Witness systems, assemblies, equipment, and component startup and/or functional performance tests as specified in the Commissioning Plan.

H. Compile test data, inspection reports, and certificates; include them in the systems manual and final commissioning report.

END OF SECTION

Division 01	GENERAL REQUIREMENTS	Attachment
010000.1	**GENERAL COORDINATION**	
010000.1.1	Design-Build Teams are required to use Constructware File Management System.	
010000.1.2	BIM Standard: COBie Standards for BIM model Reporting; Section 01 70 00	
010000.1.3	Design-Build Teams are required to use Metro Standard Room Numbering Conventions and Naming Conventions for cameras, card readers and door numbering.	**TBD**
010000.1.4	Metro General Services to provide Interior Design Services for material finish selections; Design-Build Team to indicate selections on drawings, specify and coordinate.	
010000.1.5	Metro General Services to provide Commissioning Agent.	
010000.1.6	Metro General Services to provide LEED Facilitator to oversee LEED Certification Process.	
010000.2	**LEED COORDINATION**	
010000.2.1	LEED Coordination and Documentation: Indicate in product sections the required documentation needed from sub-contractors to fulfill achievement of points indicated on LEED Scorecard. GC to submit Action Plans and LEED Updates per section 01 81 13.	
010000.2.2	LEED Silver Certification Required, Minimum. Design-Build Team to prepare initial scorecard; Once team is selected scorecard will be reviewed with Metro in detail.	
010000.2.3	Team to abide by LEED Criteria set forth in the LEED Scorecard.	
010000.2.4	Architect INSERT 01 81 13 in full to Specifications Manual.	**01 81 13**
010000.2.5	Architect INSERT "LEED SUBMITTAL FORM" into Specifications Manual after section 01 81 13.	**L**
010000.2.6	COMMISSIONING Fundamental and Enhanced: Include **Section 01 91 00** in Project Manual	**01 91 00**
010000.3	**ADDITIONAL PROGRAMMING AND COORDINATION REQUIREMENTS**	
010000.3.1	CONTROLS: The controls subcontractor is to conform to the control points naming standard provided by Metro.	
010000.3.2	IP Addresses: Determine Quantity early in design process; Identify MEP Subcontractors and the Controls Subcontractor to identify how many IP addresses will be required. [Refer to Controls Section for additional information]	
010000.3.3	Sequencing Schedule for all Low Voltage (including security) is required by the Contractor at the end of Design Development for Metro Review.	
010000.3.4	Attic Stock: On the drawings or Specifications; Architect to coordinate Attic Stock percentages required by Metro. No Paint is required.	
010000.3.5	LACTATION ROOM Per AIA Standards and Civil Service Rules	**I, J**
010000.3.6	No space to be unconditioned. All spaces to have some form of tempering from extreme temperature changes.	
010000.3.7	Knox Box: Coordinate location and data required. Show location on drawings.	
010000.4	**SCHEDULING**	
010000.4.1	Scheduling: Air Sampling (Pursued regardless of LEED); Contact your Metro Project Manager; GC to carry cost of Air Sampling in Construction Budget.	

Division 01	GENERAL REQUIREMENTS	Attachment
010000.4.2	Completion of the Equipment Barcoding Spreadsheet. Metro provides the bar codes and standard form. Design-Build Team to provide equipment data. Equipment to be barcoded as it is installed. Equipment includes, but is not limited to, elevators, lighting controls, water control valves, fire extinguishers, heaters, cameras, card readers, etc. The Bar Code Number and equipment data to be included.	**TBD**
010000.4.3	PUNCH LIST WALK-THROUGH: Maintenance Staff (Metro will specify and invite) shall be included in the punch list walk through.	
010000.4.4	45 DAY NOTICE : Trigger date for GC to indicate to Metro Project Manager that the project is to be complete in 45 days. METRO coordination of scheduled items to occur. Contact your Metro Project Manager.	**TBD**
010000.4.5	KEYING: All keys, except furniture keys, (elevators, generators, etc.) to be delivered to Metro General Services for recording. Provide to your Metro Project Manager.	
010000.4.6	KEY BOXES: General Contractor to Install and Label Keys	**A**
010000.5	**PROJECT CLOSE-OUT**	
010000.5.1	ATTIC STOCK: Contractor to deliver all attic stock to MSE Warehouse (no attic stock of paint)	
010000.5.2	AS-BUILT DRAWINGS: Ensure that Dimensioned Underground Utilities are included with all record drawings.	
010000.5.3	PHOTO DOCUMENTATION REQUIRED: For all underground utilities and Electrical and Plumbing located inside walls and above ceiling.	
010000.6	**WARRANTY [REFER TO GENERAL CONDITIONS OF THE CONTRACT]**	
010000.6.1	Metro requires a one year warranty on the project and this includes landscaping. The one year warranty includes everything the General Contractor provided.	
010000.6.2	Design- Builder Price to include the 3 year extended warranty for mechanical, electrical and controls. [REFER TO THE 3-YEAR WARRANTY DOCUMENT] Include the following items:	
	Air handling units	
	Roof top units	
	VAV boxes	
	Make up air units	
	Variable refrigerant systems	
	Boilers	
	Chillers	
	Pumps	
	Cooling Towers	
	Geo-thermal loop equipment	
	Water filtration equipment	
	Lighting Panels	
	Building Automation Systems	
	Fire and security panels	
	Sprinkler systems	
	Elevator equipment	
	Irrigation equipment	

Division 01	GENERAL REQUIREMENTS	Attachment
	Parking and security gate equipment	
	Generators	
	UPS equipment	

Division 03	CONCRETE	Attachment
030000.	GENERAL: Include complete sections in the specifications for this division of the Work, in addition to notes indicated on drawings. The Design-Build Team is responsible for complete coordination of statements in the specifications and the notes on the drawings.	
030000.1	SCOPE-OF-WORK: Furnishing all labor, materials, permits, and related miscellaneous work necessary to complete the work as indicated by requirement below or as shown on the drawings. The concrete work under shall include all clearing and grubbing, preparation of subgrade, furnishing and placing concrete, shouldering, and construction of fills embankments, unless such items appear of the proposal to be bid separately.	
030000.2	Contractor shall be responsible for performance of all contract work in accordance with Metro and State of Tennessee building codes for all work. Contractor will be responsible for procurement, coordination of all permitting requirements. Copies of secured permits shall be submitted with application for payment.	
030000.3	CODES AND STANDARDS: American Concrete Institute (ACI) and American Society for Testing and Materials (ASTM) latest versions shall be used as standards and guidelines. If areas are not specifically covered under these specifications then the current version of ACI and ASTM standards apply.	
030000.4	QUALITY ASSURANCE Concrete Mixing: Ready-mixed concrete, measure, batch, mix and deliver concrete according to ASTM C 94 and furnish batch ticket information.	
030000.5	QUALITY ASSURANCE: The contractor is responsible for quality control (process control) and will submit a QA/QC plan for review and acceptance to Metro General Services. Metro General Services reserves the right for review and acceptance of processes, placement and quality of work.	
030000.6	ON SITE SUPERVISION: The Design-Builder shall observe the placing of all concrete and shall report non-compliance with specifications and drawings to Metro General Services. Metro Project Manager to observe placement of concrete, Design-Builder to coordinate communication.	
030000.7	LAYOUT: Contractor shall be responsible for notification of Metro General Service's representatives to review forms layout 24 hours prior to the placement of concrete. Contractor shall furnish data sheets at time of inspection for verification of contract compliance with codes, ACI and industry standards. All work shall conform to industry standards, manufacture's recommendations and the ACI manual of concrete practice.	
030000.8	THIRD PARTY TESTING is required for all Division 3 components. Vendor provided by Metro, Vendor is coordinated on-site by the Design-Builder. Design-Builder does not carry a budget in his contract.	
030000.8.1	Sampling, testing and inspection for process control of the concrete at the placement site shall be performed by an ACI certified technician, grade 1 or higher. A technician shall be present at each placement site during all concrete placements.	
030000.8.2	All necessary equipment required for process control shall be furnished by the Contractor and shall be at the plant and at the placement site at all times during concrete placement.	
030000.8.3	A copy of all concrete test reports shall be furnished to Metro General Services as soon as they are complete. The Design-Builder to be copied on reports.	

Division 03	CONCRETE	Attachment
030000.9	TESTS: Four (4) concrete test cylinders will be cast for every 50 Cu Yds., or no fewer than four (4) cylinders for each site each day prepared by an independent testing agency in accordance with ASTM C495. Concrete test cylinders will be tested at 7, 14 and 28 day durations, with reports sent immediately via fax or email to Metro General Services. Tests shall be made by a testing laboratory contracted by Metro General Services. Written reports of the tests shall be sent direct to the Design-Builder, with a copy to Metro General Services. Laboratory shall make test for wet density, dry density and compressive strength of each specimen.	
030000.10	TESTING SCHEDULE is required for 7, 14, and 28 day breaks.	
30000.10.1	All cylinders, including 28 day acceptance test cylinders, for compression tests in accordance with ASTM standards.	
030000.11	SLAB FLATNESS VERIFICATION: Verify with Metro Project Manager if record of interior floor slab flatness is required. Required for specialty project types such as Ice Rinks.	
030000.12	GENERAL: Ambient temperature of the air at the placing site and the temperature of surfaces to receive concrete shall comply with ACI 306R-10.	
030000.13	GENERAL: The temperature of the concrete when placed shall not be less than 55 degrees F per ACI 306R-10. Materials entering the mixer shall be free from ice, snow or frozen lumps. Salt, chemicals or other material shall not be incorporated in the concrete to prevent freezing. Calcium chloride shall not be used at any time.	
030000.14	GENERAL: Contractor shall be responsible for providing and placement of covering and other means shall be provided for maintaining the concrete at a temperature of at least ~~50~~ 55 degrees F per ACI 306R-10 for not less than 72 hours after placing, and at a temperature above freezing for the remainder of the curing period. Concrete damaged by freezing shall be completely removed and replaced at the contractor's expense.	
030000.15	GENERAL: Cement concrete and vertical structures shall be vibrated by mechanical means.	
030000.16	FINISHING: The concrete shall be struck-off with a transverse template resting upon the side forms. After concrete has been struck-off to the required cross section, it shall be finished with floats and straight edges until the required surface requirements have been obtained. When the surface of the concrete is free from water and just before the concrete obtains its initial set, it shall be finished and swept lightly with a broom in order to produce a sandy texture (unless smooth finish is required). The longitudinal surface variations shall not be more than ¼ inch under a 12 foot straightedge, nor more than 1/8 inch on a 5 foot transverse section. The surface of the concrete shall be so finished as to drain complete at all times.	
030000.17	FINISHING: The edges of the vehicle ramp pavement shall be carefully finished and rounded with an edging tool having a radius of ¼ inch. All marks caused by edging shall be removed with a wetted brush or wooden float. The top and ends of expansion joint material shall be cleaned of all concrete, and the expansion joint material shall be so trimmed as to be slightly below the surface of the concrete.	
030000.18	PROTECTION AND CURING: Forms may be removed at any time that removal will not damage the concrete. No pressure shall be exerted upon the concrete in removing forms.	
030000.19	PROTECTION AND CURING: Curing and protection during cold weather shall be performed as provided in accordance with ACI 306R-10.	

Division 03	CONCRETE	Attachment
030000.20	PROTECTION AND CURING: The contractor shall protect concrete has attained sufficient strength for such loads per the testing requirements. The contractor shall construct and place such barricades and protection devised as are necessary to keep pedestrians and other traffic off the flatwork, sidewalk, driveway, or median. Any sidewalk, driveway, or flooring damaged prior to final acceptance of the project shall be repaired, at the Contractor's expense, by removing concrete within groove limits and replacing it with concrete of the type and finish in the original construction.	
030000.21	BACKFILLING: Immediately after removing the side forms, the spaces along the edges of sidewalk or driveway shall be filled with suitable topsoil grade organic material. This material shall be placed in layers not exceeding 4 inches in loose thickness, and compacted until firm and stable. Slope grades away from pavement to develop positive drainage away from slab edge. Roll landscaped areas for compaction. Place Sod as required to restore areas disturbed by project construction. Landscaping and Sod Placement.	
030000.22	FINAL CLEANUP: Final Cleanup shall be performed to restore the project site to its original condition or as accepted by Metro General Services.	
033000.	**CAST-IN-PLACE CONCRETE**	
033000.1	SPECIFICATIONS: Shall meet current standard specification for architectural concrete as published by ACI and ASTM.	
033000.2	TEST REPORTS: A copy of all concrete test reports shall be furnished to the University Construction Coordinator.	
033000.3	STRUCTURAL DESIGN OF SLABS: Construction shall be given in the design of floor and roof slabs to provide exposed construction which can be used as finished ceilings insofar as practicable. Such construction, however, shall be planned only if requirements for limits in heat losses and for noise control can be met.	
033000.4	FIRE STATION BAY and DRIVE DESIGN MIX: Submit mix design for design engineerapproval of concrete mix design.	
033000.5	INTERIOR BUILDING CONCRETE: Specify a mix which will give compressive strength of not less than 3,500 psi in 28 days.	
031000.6	INTERIOR BUILDING CONCRETE: Integral Finish shall be specified for all floors. No separate topping. All finished floors that will be left exposed shall receive a hardening treatment by means of power troweling or a chemical hardener.	
031000.7	CONCRETE FOOTINGS: Tops of footings for exterior foundations should be at least 3'-0" below finish grade. 2,500 psi concrete or flowable fill may be specified for filling over-excavations for footings.	
031000.8	EXTERIOR CONCRETE: An approved air-entraining admixture shall be used for all concrete exposed to weather complying with ASTM C 260. Concrete shall have a minimum compressive strength shall be 4000 psi or appropriate psi for the intended use based on design specifications. Use air entraining admixtures in all exterior exposed concrete.	
031000.9	ROOF FILL: Lightweight concrete for roof fill shall be determined by the Structural Engineer. The Structural Engineer shall submit the recommendation with complete back-up documentation, in writing, to the Architect of Record and to Metro General Services.	
031000.10	PLACEMENT OF GEOTEXTILE: Geotextile material will be fitted longitudinal in the bottom of excavated areas. Sheet widths will be lapped 24 inches and extend up the sides of the trenches full height. Geotextile Materials used in this work shall meet the requirements for the class of material names, and as provided in the specifications.	

Division 03	CONCRETE	Attachment
031000.11	REINFORCING STEEL: Materials shall be manufactured from new billet steel, intermediate graded, deformed bars, in accordance with the standard specs in ASTM, current edition.	
31000.11.1	PLACEMENT OF REINFORCING STEEL: Reinforcement shall be positioned on suitable plastic chairs securely fastened to the sub grad prior to concrete placement.	
031000.12	PLACEMENT OF CONTRACTION JOINTS STEEL: Dowels in longitudinal and transverse contraction joints within the paving shall be held securely in place by means of rigid metal basket assemblies. The basket assemblies shall be held securely in the proper location by means of suitable anchors for the bars and sleeve assemblies.	
031000.13	PLACEMENT OF JOINTS-FIX/EXPANSION JOINT: Installation of dowels shall be by the bonded-in-place method, supported by means of devices fastened to the forms. Installation by removing and replacing in preformed holes will not be permitted.	
031000.14	EXPANSION JOINTS: A premolded expansion joint will be installed at the facility grade beam and the vehicle ramp and at the termination of ramps and access aprons, and as indicated by the design. Premolded expansion joint filler, ½ inch in thickness, shall be place at the locations and in line with expansion joints in the adjoining pavement, gutter or curb. All pre-molded expansion joint filler shall be cut to full width or length of the proposed construction and shall extend to within ½ inch of the top or finished surface. All longitudinal expansion joints shall be placed as indicated on the plans or as direction by the Architect. All expansion joints shall be true, even and present a satisfactory appearance.	
031000.15	TRANSVERSE CONSTRUCTION JOINTS: Transverse Construction joints will be installed utilizing a Metal Keyed Joint and 18 inch deformed #8 reinforcing bars placed on 18 inch centers. Construction joints are to be the layout equal distance, but no greater than 12 feet on center.	
031000.16	ISOLATION JOINTS: Construction joints shall be formed around all appurtenances, such as manholes, utility poles, etc. , extending into and through the sidewalk or median area. Pre-molded expansion joint filler, ½ thick, shall be installed in these joints. Expansion joint filler of the thickness indicated shall be installed between concrete sidewalks and any fixture structure, such as a building or bridge. One half inch (1/2) thick expansion joint filler shall be installed between concrete curb and median pavement and, unless otherwise specified, between concrete curb and sidewalk. This expansion joint material shall extend for the full depth of the walk or median pavement.	
031000.17	LONGITUDINAL CONTRACTION JOINT: Smooth 18 inch long dowel bars will be installed at the center of slab sections. Saw cut joint and fill with joint sealer.	
031000.18	ADMIXTURES: Use admixtures according to manufactures' written instructions. Use water reducing and retarding admixture when required by temperatures, low-humidity, or other adverse placement conditions. Use water-reducing admixture in pumped concrete, concrete for heavy industrial slabs and parking structure slabs, concrete required to be watertight and concrete in water-cementitious materials ration below 0.5. Air entrained concrete; the water cement ratio (including free surface moisture on the aggregates but not included moisture absorbed by the aggregates) shall not exceed. 0.49. The percentage of air entrained in the mix shall be six percent, with a tolerance of plus one or minus one	

Division 03	CONCRETE	Attachment
033300.	**ARCHITECTURAL CONCRETE**	
033300.1	Specifications shall meet current standard for architectural concrete as published by the current standards of the American Concrete Institute.	
033300.2	SAMPLE PANEL 4' by 8' in size shall be erected at the site when cast-in-place architectural concrete is to be used. Panel shall be protected from construction operations, but shall be left exposed to the elements. Apply curing compound if specified for the final product. Panel shall be left in place until all have approved the architectural concrete.	
033300.3	SAMPLE PANEL of at least 5' by 10' in size shall be produced to illustrate each floor finish stamped, stain or polish for interior conditions.	
033900.	**CONCRETE CURING**	
033900.1	Specify non-staining type, required to meet ASTM Standards.	
033900.2	CURING COMPOUNDS require a manufacturer's certification that the compounds used for architectural concrete are non-yellowing and non-staining. Curing Compounds manufacturer is to provide certification that their product is compatible with the resilient flooring or carpet adhesive scheduled for the space.	
	CHEMICAL HARDENER TREATMENT: Verify that the chemical hardener used is compatible with the finish material curing requirements as listed by the manufacturer.	
033400.	**PRECAST CONCRETE**	
033410.	PRECAST STRUCTURAL CONCRETE: Base design and specifications on recommendations of the American Concrete Institute, ASTM test and the Precast/Prestressed Concrete Institute.	
033411.	PRECAST CONCRETE PANELS: Base design and specifications on recommendations of the American Concrete Institute, ASTM test and the Precast/Prestressed Concrete Institute.	
033450.	PRECAST ARCHITECTURAL CONCRETE: Follow the design and specification recommendations of the Precast/Prestressed Concrete Institute for architectural precast concrete.	
035000.	**CEMENTITIOUS DECKS**	
	Upon completion of the installation, a certificate from the manufacturer of insulating materials used, stating that materials were installed by an approved applicator and that materials were installed in accordance with the drawings and specifications, shall be furnished to the Design-Builders.	
321343.	**PERVIOUS CONCRETE PAVING**	
321343.1	Comply with current ASTM Standards	
321443.	**POROUS UNIT PAVING AND PERMEABLE CONCRETE PAVERS**	
321443.1	Belguard Commercial Systems, such as Aqualine and ModuLine, suitable for intended load and stormwater management. Metro to approve equivalent products.	

Division 04	MASONRY	Attachment
040000.	GENERAL: Include complete sections in the specifications for this division of the Work, in addition to notes indicated on drawings. The Design-Build Team is responsible for complete coordination of statements in the specifications and the notes on the drawings.	
040000.1	A TESTING SCHEDULE is required and a copy of all grout test reports shall be furnished to the Metro General Services in the monthly progress reports.	
040000.3	USE OF INK MARKING PENS ON SURFACES of any kind of materials is prohibited. Experience has shown that such marks bleed through paint and other finishes.	
040000.4	BRICK SURFACE TREATMENT: Treating of brick surface with stain or other surface treatment or simulation to obtain a color blend is prohibited.	
040000.5	Non-ACID FOR MASONRY CLEANING: The cleaning solution must be included in applicable sections of the Specifications.	
040000.6	Brick: Include $400/1000 unit brick allowance.	
040000.7	SAMPLE PANEL: Quantity as specified by Architect for brick color selection and mortar color selection.	
041000.	**MORTAR**	
041000.1	MORTAR FOR LAYING MASONRY: May be ready-mixed or job mixed. Specify by types listed in ASTM C-270 3. Do not specify mortar which may corrode steel reinforcement or structure.	
041000.2	POINTING MORTAR: Pointing mortar for clay facing tile masonry shall be made with white silica sand and white Portland cement. Tool finish joints are required unless otherwise directed by Metro.	
041000.3	THIRD PARTY TESTING is required for Mortar Components. Vendor provided by Metro; Vendor is coordinated on-site by the Design-Builder. Design-Builder does not carry a budget in his contract.	
041000.5	Colored cement product must be packaged blend made from masonry cement and mortar pigments all complying with specified requirements.	
041000.6	Formulate blend as required to produce color as selected from manufacturer's standard colors.	
041000.7	Pigments should not exceed 10 percent of Portland cement by weight.	
041500.	**MASONRY ACCESSORIES**	
041500.1	WALL TIES: For masonry veneer or facing to metal stud wall back-up may be stainless steel bolts and nuts and stainless steel washers. Sheet metal screws and similar attachments are not acceptable. Verify the need for seismic clips and anchoring for masonry veneer.	
041500.2	JOINT REINFORCEMENT: Wire mesh type prohibited. Trussed type is preferred over ladder type. Provide ladder type joint reinforcement at vertically reinforced masonry walls and truss type in non-reinforced walls.	
041500.3	WEEP HOLES: Stamped aluminum louvered vents or plastic of size to fit head joints in brickwork. Mortar Net or a comparable mortar collection product shall be added at the base of the veneer and single wythe concrete masonry walls to prevent clogged weep holes.	
041500.4	PLUG ANCHORAGE by use of wood, lead, or plastic is prohibited.	

Division 04	MASONRY	Attachment
042000.	**UNIT MASONRY**	
042100.	**BRICK MASONRY**	
042100.1	BRICK MASONRY: Color and blend of face brick shall generally be approved by Metro General Services.	
042100.2	EFFLORESCENCE Test for Face Brick: Submit to Metro General Services the manufacturer's certification that bricks show no efflorescence when tested in accordance with ASTM Method C67.	
042100.3	SAMPLE PANEL for Constructability and Color Range Review of selected products: Before starting work, Design-Builder shall build one sample panel for inspection and approval. Build panel on a firm foundation, in location indicated by the Design Builder. Panel shall be L-shaped, with long side a minimum of 5 feet 4 inches long by 3 feet 4 inches high, with one corner return at least 2 feet long. Construct long side and return of 8 inch concrete block and face brick. Panel shall show color range and texture of masonry units, bond, mortar joints, and workmanship. Completed masonry work in the building shall be equal to that shown in the approved panel. Do not remove panel until masonry work is completed or until removal is authorized.	
042100.4	COURSING: Brick shall be laid with modular coursing, three (3) courses to 8 inches, unless otherwise approved.	
042100.5	DESIGN: Face brick elevations shall include structural considerations for division of such elevations into panels to accomplish structural support of the brick face and expansion joints for control of thermal expansion damage. Designs, which include brick roof construction, shall not be used.	
042100.6	NON-STANDARD BRICK is prohibited.	
042100.7	CLAY FACING TILE: Select quality ceramic glaze, 8 W Series	
042100.8	REINFORCEMENT: Structural facing tile partitions shall be reinforced every second course with approved joint reinforcement.	
042200.	**CONCRETE UNIT MASONRY**	
042200.1	CONCRETE UNIT MASONRY: Concrete block shall be used wherever possible interior wall finish if approved by the Metro General Services. ASTM tests shall be indicated on all materials used below per International Building Code.	
042200.2	CONCRETE BLOCK, Types and Uses: a. LOAD BEARING - normal weight, standard size. b. NON-LOAD BEARING - lightweight, made with expanded shale aggregate and of a standard size. c. EXPOSED EXTERIOR - Washed crushed limestone course aggregate and washed limestone sand, only, shall be used.	
044000.	**STONE**	
044313.	**LIMESTONE**	
044313.1	Buff Indiana Oolitic limestone shall be used, except where other types might be required to match existing stone.	
044313.2	Backs and Bonding Faces shall be damp proofed with a water barrier as recommended by the Indiana Limestone Institute of America, Inc.	
044313.3	Limestone Shall Be No Closer Than 4-Inches to Grade, when adjacent to lawns and planting areas.	

Division 04	MASONRY	Attachment
044313.4	Sealant: Use a two-component, non-staining urethane elastomeric joint sealant for pointing stonework. Specify products that do not require priming of joint surfaces.	
044313.5	Anchors, Dowels, and Other Accessories used in setting stone shall be stainless steel.	
044313.6	Handling, Protection, and Installation shall comply with the recommendations of the Indiana Limestone Institute.	
044314.	**MARBLE**	
044314.1	Marble shall be domestic.	
044314.2	Edges of marble window stools shall be eased.	
044315.	**GRANITE**	
044315.1	Granite shall be domestic.	
044315.2	Granite may be specified for exterior stair treads when heavy traffic is anticipated.	

Division 05	METALS	Attachment
050000.	GENERAL: Include complete sections in the specifications for this division of the Work, in addition to notes indicated on drawings. The Design-Build Team is responsible for complete coordination of statements in the specifications and the notes on the drawings.	
051200.	**STRUCTURAL STEEL FRAMING**	
051200.1	THIRD PARTY TESTING is required. Vendor provided by Metro; Vendor is coordinated on-site by the Design-Builder. Design-Builder does not carry a budget in his contract.	
051200.2	TESTING SCHEDULE is required and a copy of all steel test reports shall be furnished to the Metro General Services in the monthly progress reports.	
051200.3	AFFIDAVIT FROM ERECTOR: The General Contractor shall be required to provide an affidavit, at the completion of the job that the structural steel frame is plumb and level within the normal tolerances specified in the code.	
051200.4	RECORD OF ERECTION: The General Contractor shall provide a certified survey by a registered Civil Engineer showing the exact location of the centers and elevations of the columns at their topmost level, exactly as installed. This information shall be incorporated into the "record" drawings.	
052000.	**METAL JOISTS**	
052000.1	MANUFACTURER'S CERTIFICATE OF COMPLIANCE with Steel Joist Institute Specifications is required.	
052000.2	PRIME COAT AND TOUCH-UP PAINTING Will be considered adequate for joists, except where subjected to moisture or where exposed to view. Asphalt coatings are not permitted on metal joists that are to remain exposed and receive painted finish.	
053000.	**METAL DECKING**	
053000.1	MANUFACTURER'S CERTIFICATE OF COMPLIANCE with Steel Deck Institute Specifications is required.	
053000.2	PRIME COAT AND TOUCH-UP PAINTING Will be considered adequate for metal deck, except where subjected to moisture or where exposed to view.	
054000.	**COLD FORM METAL FRAMING**	
054000.1	MANUFACTURER'S CERTIFICATE OF COMPLIANCE with American Iron & Steel Institute (AISI) specifications SG02-1 North American Specifications for the Design of Cold-Formed Steel Structural /Members and SG-973 Cold –Formed Steel Design Manual is required.	
054000.2	Metal stud and furring strips shall be spaced 16 inches on center, maximum.	
055000.	**METAL FABRICATIONS**	
055000.1	WELDER CERTIFICATION: The General Contractor or Construction Manager is responsible for obtaining and retaining welder certifications for any person performing on-site welded steel fabrication or erection. The certifications must be current and validated by welding logs or certification test(s) conducted within the last two (2) years.	
055000.2	GALVANIZING REQUIREMENTS: All exterior ferrous metals shall be hot-dip galvanized after fabrication.	

Division 05	METALS	Attachment
055000.3	MISCELLANEOUS METAL FRAMING for electrical support systems: If electrical equipment is attached to support framing, the Electric Contractor will provide and install that metal framing.	
055000.4	USE OF INK MARKING PENS ON SURFACES of any kind of materials is prohibited. Experience has shown that such marks bleed through paint and other finishes.	
055000.5	LINTELS FOR PLUMBING, HVAC, AND ELECTRICAL INSTALLATIONS: Provide lintels for all openings through load bearing walls when openings are required. All such plumbing, HVAC, electrical, and sprinkler openings must be coordinated and shown on the Architectural and/or Structural Drawings.	
055000.6	GRATINGS: Ferrous gratings shall be hot-dip galvanized. Galvanized hardware cloth shall be installed under all areaway gratings.	
055000.7	MANUFACTURER'S CERTIFICATE OF COMPLIANCE with ANSI/NAAMM National Association of Architectural Metal Manufacturer's MGB531 Metal Bar Grating Manual materials, construction and installation specification is required.	
055000.8	MANUFACTURER'S CERTIFICATE OF COMPLIANCE with ANSI/NAAMM National Association of Architectural Metal Manufacturer's MGB531 Metal Bar Grating Manual materials, construction and installation specification is required.	

Division 06	WOOD, PLASTICS, & COMPOSITES	Attachment
060000.	GENERAL: Include complete sections in the specifications for this division of the Work, in addition to notes indicated on drawings. The Design-Build Team is responsible for complete coordination of statements in the specifications and the notes on the drawings.	
061100.	**WOOD FRAMING (Interior and Exterior)**	
061100.1	Stud and furring strip spacing shall be 16 inches on center, maximum.	
061326.	**HEAVY TIMBER CONSTRUCTION (Use only if Approved By** Metro**)**	
061326.1	TIMBER TRUSSES: With the shop drawings, a complete design analysis of structural components shall be submitted. Data shall bear the seal and signature of a professional engineer, registered in Tennessee, attesting that the design of trusses meets requirements of the International Building Code and design loadings.	
062000.	**FINISH CARPENTRY**	
062000.1	MATERIALS AND FABRICATION: Conform to Architectural Woodwork Institute specifications for Custom quality work.	
062000.2	USE OF INK MARKING PENS ON SURFACES of any kind of materials is prohibited. Experience has shown that such marks bleed through paint and other finishes.	
062200.	**MILLWORK**	
062200.1	Architectural Woodwork Institute “Quality Standards”, latest edition.	
062200.2	“Custom Grade” for standard woodwork.	
062200.3	“Premium Grade” for unique and special projects or wood veneer features within a project, such as at circulation desks or other features indicated in the RFQ/RFP documents.	
062200.4	Solid Surface at ALL Wet Areas.	
063000.	**WOOD TREATMENT**	
063000.1	PROTECTION AGAINST DECAY: Wood used in conjunction with roofing installations and wood which is installed in contact with concrete or masonry shall be pressure treated with an approved preservative to meet AWPS Standards. Other installations shall receive prime coats suitable for finishes specified as soon as installations are completed. Back prime where dampness or warping is anticipated. Wood preservatives containing arsenic such as CCA for exterior construction above ground on in ground contact or fresh water is prohibited.	
064000.	**ARCHITECTURAL WOODWORK**	
064100.1	CABINET WORK: Materials and fabrication shall conform to Architectural Woodwork Institute specifications for Premium quality work.	
064193.	**CABINET AND DRAWER HARDWARE**	
064193.1	Hinges: Five (5) knuckle in schools, day cares, fire stations; and high abuse areas.	
064193.2	Drawer Glides: Full extension, quiet-type (nylon)	
064193.3	Locks on cabinet doors: Library, Teen Spaces, Cubbies, Community Centers, Lockers	
064193.4	Drawer Weight Capacity: 25 pounds, minimum	
064193.5	Edge Banding: Two (2) millimeter PVC; No laminated self-edging allowed.	

Division 07	THERMAL & MOISTURE PROTECTION	Attachment
070000.	GENERAL: Include complete sections in the specifications for this division of the Work, in addition to notes indicated on drawings. The Design Team is responsible for complete coordination of statements in the specifications and the notes on the drawings.	
070000.1	EXTERIOR INSULATION AND FINISH SYSTEMS (EIFS): Not allowed for use on Metro General Service projects without written consent from Metro General Services.	
071000.	**DAMPPROOFING AND WATERPROOFING**	
071000.1	Calculations shall be provided to demonstrate that the dew point of all foundations/roofs/walls with waterproofing falls on the outside of the building.	
071000.2	Foundation Waterproofing shall be provided at all below grade vertical and horizontal surfaces.	
071000.3	Exposed Bituminous Waterproofing shall not be allowed on surfaces of exterior walls and walls below grade.	
071000.4	WATER REPELLENT COATINGS: Exposed surfaces of exterior brick, concrete block, and Precast concrete shall be coated with a penetrating colorless, non-staining, mildew-resistant water repellent applied by an applicator experienced with the material applied. Will be vapor permeable to allow moisture to escape from inside the wall. The product shall include a ten (10) year warranty.	
071000.5	WATERPROOFING: The following are minimum requirements to assure adequately designed waterproof floors for equipment rooms and other areas subject to flooding from equipment failure or see page from exterior sources:	
071000.5.1	Drawings shall fully detail the installation of the membrane. Continuous membrane risers shall be provided above the finished floor surface at vertical walls, pads, curbs, pipes, and ducts through the slab.	
071000.5.2	All floor penetrations must be sleeved to a height of 4” above the finished floor. Risers shall be at least as high as the lowest curb and shall be bonded to the vertical surface.	
071000.5.3	Concrete foundation walls around elevator pits and around basements, from grade to footings, shall be treated with membrane waterproofing.	
071000.5.4	Specifications shall provide for a heavy duty, permanent waterproofing type of membrane capable of adjusting to building movements without breaking the membrane seal.	
071000.5.5	When rubber or plastic membranes are specified, a five (5)-year experience clause with written documentation by the installer shall be required.	
072000.	**THERMAL PROTECTION**	
072100.	Wall Insulation: A minimum R-Value of 19 is required.	
072200.	Roof Deck Insulation: A minimum R-Value of 30 is required.	
072200.1	All insulating materials, including cant strips and tapered edge strips, shall be non-hygroscopic. Wood fiber composite insulation is prohibited. A suitable cover board as recommended by the National Roofing Contractors Association (NRCA) shall be installed over all polyisocyanurate type insulation board. Compatibility with roofing materials or separation is mandatory for wood, treated wood, fibrous materials, insulation, etc.	
075000.	**ROOF SYSTEMS**	

Division 07	THERMAL & MOISTURE PROTECTION	Attachment
075000.1	In coordination with the Design-Builder, architect of record, Metro General Services representative and Roof Resources, Inc. will review and concur with the roof design criteria at project conception, schematic and final design phases. Metro General Services representative and Roof Resources, Inc. conduct will be included in all roof design reviews, review and approve all roofing material submittals and ensure all manufacturer's installation requirements, warranties and maintenance procedures are included in the roof scope of work. Metro General Services representative and Roof Resources, Inc. will assist the architect of record in developing a specific Scope of Work on a project by project basis. Metro General Services representative and Roof Resources, Inc. will schedule and conduct a roof pre-construction meeting, schedule and conduct roof installation progress inspections, punch list development/correction and final inspection to include the manufacturer representative (if required).	
075000.2	Roofing Design shall comply with Metro Insurer's requirements; concurrent with the Design-Build Team's recommendations, manufacturer warranty and installation methods.	
075000.3	Fluid Applied Roofing will not be permitted.	
075000.4	Roof system sheet metal flashings, membrane flashings, design and detailing, at a minimum, shall comply with the requirements and recommendations of the following standards:	
075000.4.1	National Roofing Contractors Association (NRCA), Roofing and Waterproofing Manual, most current edition.	
075000.4.2	Architectural Sheet Metal Manual, most current edition, Sheet Metal and Air Conditioning Contractors National Association, Inc. (SMACNA).	
075000.4.3	Detailed according to NRCA and SMACNA standards and installed per the roof manufacturer's instructions.	
075000.5	DESIGN REQUIREMENTS FOR MEMBRANE ROOFING: Roof decks must be built with a slope of at least 1/4 in. per ft. toward drains. Dead level roofs are prohibited. Use of Emergency relief drains is prohibited. Scupper openings shall be provided through parapet walls complying with all applicable requirements of the IBC in lieu of relief drains. Ensure that drains are truly at low points of roofed area. Install "crickets or saddles" to divert water flow around curbs so as to avoid interference with designed drainage system. "Crickets and saddles" shall be installed behind curbs with a dimension of 24 inches or greater measured perpendicular to the slope of the roof.	
075000.6	DRAINAGE: Ponding is defined as standing water on roofs for more than 72 hours and frequent source of leaks and cause of premature failure of roof systems. Ponding water is not acceptable and the new roof systems are to be designed to drain properly in all areas. All roof drains, through wall scuppers and drip edges are to be slumped with tapered insulation and tapered edge strips.	
075000.7	STORAGE OF MATERIALS: Roofing felts, membranes and insulation are to be stored in a dry trailer or inside a dry building. Exterior storage on skids or tarpaulin coverage is unacceptable. Asphalt or coal tar pitch may be stored outside if kept under a tarpaulin or plastic film.	
075000.8	MAINTENANCE AND WARRANTY: The General Contractor, manufacturer and installing subcontractor shall furnish a written three (3) year guarantee on the complete membrane waterproofing installation. Submit the guarantee in triplicate. The guarantee shall begin when the space is completed and accepted for use by Metro General Services. The guarantee shall cover, at no cost to the Owner, all labor and materials required for repair or replacement to correct leaks, faulty materials or workmanship.	

Division 07	THERMAL & MOISTURE PROTECTION	Attachment
075000.9	ROOFING AND FLASHING GUARANTEE: The manufacturer(s) of materials used shall furnish a written twenty (20) year guarantee on the complete roof installation. Submit the guarantee in triplicate. The guarantee shall begin when the project is completed and accepted by The Metro General Services.	
075000.10	ROOFING AND FLASHING GUARANTEE: The general contractor and the roofing subcontractor shall furnish a five (5) year maintenance warrantee on the total roofing system. The guarantee shall cover, at no cost to the Metro General Services all labor and materials required to repair or replace roofing, flashings, sheet metal and copings as necessary to fully correct leaks, faulty workmanship or defective materials. Flashing guarantee requirements, including curb heights, must comply with manufacturer's requirements for warranty of roofing systems.	
075000.11	WET MATERIALS: Roofing felts or insulation which became wet before or after installation must be removed and replaced. Wet materials shall not be dried and reused. Wetted membrane materials must be thoroughly evaluated to determine the effect on adhesion, lap seals or blister potential. Remove any such material if there is any possibility of failure.	
075000.12	CLEAN UP: Emphasize that debris not be allowed to accumulate on roof during construction. All debris to be totally removed at completion of project.	
075000.13	COORDINATION OF INSTALLATION: The roofer shall install all flashings and insulation required to make a complete waterproof installation. Although certain counter flashings or similar materials may be provided by other contractors, the roofer shall be made responsible for their proper installation.	
075000.13.1	INSTALLATION: When surface applied membrane waterproofing is specified, installation is prohibited until after the major work of all other trades has been completed. Inaccessible surfaces under equipment and housing foundations, pads, and curbs shall be waterproofed in advance of floor areas. Surface membrane must be protected until acceptance of the space by Metro General Services. Surface applied membrane, except under equipment, must be accessible for repair.	
075000.14	FIELD QUALITY CONTROL: Testing of waterproofed membrane floors is required by flooding. Floors shall be filled with water to within 1/4 in. of top of lowest curb for a period of 6 hours and closely inspected for leaks. Tests shall be witnessed by designated representatives of Metro General Services. The test shall not relieve the contractor of maintaining a leak free floor until the end of the warranty period.	
075000.14.1	FIELD QUALITY CONTROL: Metro General Services shall be given 2 weeks advance notice of intent to start installation of roofing materials. Designated Metro General Services personnel must be permitted to perform a pre-installation inspection of roofing materials and equipment, to be present throughout roofing installation to observe installation techniques for compliance with specifications and to participate in final inspection. Questionable installations will be brought to the attention of the Designer who shall take immediate action to correct any deficiencies in materials or installation. Failure of Metro General Service personnel to call attention to deficiencies shall not relieve the contractor of responsibilities stipulated in the Maintenance Guarantee.	
075000.14.2	CUTTING OF TEST PANELS: Metro General Services reserves the right to cut test panels from the finished roof in order to determine that minimum requirements have been met. The roofer shall repair the roof where test panels were taken.	
075000.15	UNUSED ROOFTOP EQUIPMENT: Locate and remove all unused roof top equipment on the roof. Verify abandoned equipment with representative of Metro General Services.	
075100.	**BUILT-UP BITUMINOUS ROOFING**	

Division 07	THERMAL & MOISTURE PROTECTION	Attachment
075100.1	Composed of four plies of Type VI fiberglass felts layered in cold applied membrane adhesive or hot applied asphalt bitumen.	
075113.	**BUILT-UP ASPHALT ROOFING**	
075113.1	No less than four (4) ply construction may be specified.	
075113.2	Conform strictly with the manufacturer's recommendations for installation.	
075113.3	A fume control system approved by Metro General Service's project representative is required.	
075200.	**MODIFIED BITUMINOUS ROOFING**	
075200.1	Systems composed of at least three plies, one of which can be a heavy base sheet, are preferred. Mineral (granule) surface weathering is preferred.	
075300.	**ELASTOMERIC MEMBRANE ROOFING**	
075300.1	Fully Adhered 50 mil Elvaloy Ketone Ethylene Ester (KEE) roofing membrane system by FiberTite, Garland Company, DuPont Elvaloy, or approved equal KEE roof manufacturer is recommended.	
075323.	**MEMBRANE ROOFING (EPDM)**	
075323.1	115 mil. fleece backed, fully adhered.	
075400.	**THERMOPLASTIC MEMBRANE ROOFING**	
075400.1	Heat weld seams recommended. No ballasted roof systems permitted.	
075400.2	Other types allowed with written approval from Metro General Services.	
076000.	**FLASHING AND SHEET METAL**	
076000.1	GENERAL REQUIREMENT: Plug Anchorage by use of wood, or plastic is prohibited.	
076000.2	METAL FLASHING: Copper, soft tempered stainless steel, tern coated or stainless steel. No aluminum or galvanized steel.	
076000.3	PITCH AND PAN POCKETS: Use of pitch pans or pockets only if approved by the Metro General Services. Items penetrating roofing must be flashed with sheet metal secured with clamps or with box curbs welded, or otherwise secured, to the penetrating items. See flashing materials above for acceptable metals.	
076000.4	FABRICATION AND INSTALLATION: Conform to the Sheet Metal and Air Conditioning Contractors National Association, Inc. (SMACNA) Architectural Sheet Metal Manual recommendations. Copper, when used, to conform to SMACNA and Revere Copper Products Copper & Common Sense recommendations.	
077000.	**ROOF AND WALL SPECIALTIES AND ACCESSORIES**	
077000.1	GUTTERS AND DOWNSPOUTS: Copper, stainless steel, or baked enamel steel. No aluminum or galvanized steel.	
077000.2	FACIAS AND GRAVEL STOPS: Fabricated from aluminum, copper, stainless steel, or baked enamel coated steel. New fascias and gravel stops shall be adequately sized to cover perimeter wood nailers minimally 1 ½ inches.	
077000.3	ROOF HATCHES: With internal ladder.	
077000.4	PARAPET CAP FLASHING: Fabricated from aluminum, copper, stainless steel, or baked enamel coated steel. Parapet cap flashings shall have standing seam or drive cleat joints and designed to drain back on roofs.	

Division 07	THERMAL & MOISTURE PROTECTION	Attachment
077000.5	EMERGENCY OVERFLOW PROTECTION: All roof areas shall have a secondary means of evacuating water from the surface of the roof in the event the primary drainage system is blocked. The secondary drainage system shall be totally independent of the primary drainage system and may consist of overflow scuppers through walls.	
077000.6	ROOF EXPANSION JOINTS: Fabricated from aluminum, copper, stainless steel, or baked enamel coated steel.	
077000.6.1	Install two (2) piece expansion joint covers over existing roof curbs and new wood nailers (if needed to meet the 8 in. base flashing height requirement).	
077000.6.2	The expansion joint covers shall be installed over exterior continuous cleat on one side and fastened 8 in. on center with stainless steel gasketed sheet metal fasteners on the other side.	
077000.6.3	All joints of the cap are to be standing seam and each seam is to have a concealed cleat.	
077000.6.4	Seal all seams with concealed caulk.	
077000.7	Fabricate drive cleat type relief joints in the new expansion joint covers at 30 ft. on center to compensate for lateral expansion and contraction movement.	
077000.8	Install new EPDM cradle and fiberglass batt insulation inside each expansion joint curb.	
077000.9	WALKWAYS: Provide per roof system manufacturer's specifications. 30”x30”x minimum thickness per manufacturers recommendation	
077000.1	ROOF JOINTS AND PROTECTION: Continue building expansion joints through roof using bellows type expansion joint system. System to be specified by Designer and approved by Metro General Services. Provide roofing area control joints as required by roofing manufacturer. Designer to incorporate expansion and control joint protection system into design specifications and documents. System to be submitted for review and approval by Metro General Services.	
079000.	**JOINT PROTECTION**	
079000.1	JOINT PROTECTION GUARANTEE: Provide written guarantee that the General Contractor and sealant installer jointly guarantee to replace, at no cost to Metro Nashville Government, any or all joints which fail to establish and maintain airtight and watertight continuous sealed joints without staining or deteriorating joint substrates within 5 years after acceptance.	
079000.2	QUALIFICATIONS OF APPLICATOR: Sealants shall be applied by specialists in the application of sealants; minimum 5 years experience required. Applicator is subject to Metro General Services approval.	
079000.3	RESPONSIBILITY FOR SATISFACTORY APPLICATION: Inspect work of other trades prior to application of sealing material. If any joint or space cannot be put into proper condition to receive the material by specified methods, immediately notify Metro General Services in writing, or assume responsibility for and rectify unsatisfactory results from improper application.	
079000.4	TIME AND TEMPERATURE REQUIREMENTS: Apply sealants as late as possible in the construction, preceding painting, and following cleaning operations. Do not apply sealants when air temperature is below 40 degrees F.	
079000.5	SEALANTS INTERIOR: Use acrylic type suitable for application of paint.	
079000.6	SEALANTS EXTERIOR: Use two-part polyurethane. Prior to construction, require manufacturer’s compatibility and adhesion test results for exterior elastomeric joint sealants on building materials which are subject to significant movement.	
079000.5	SEALANTS INTERIOR: Use acrylic type suitable for application of paint.	

Division 07	THERMAL & MOISTURE PROTECTION	Attachment
079000.6	SEALANTS EXTERIOR: Use two-part polyurethane. Prior to construction, require manufacturer's compatibility and adhesion test results for exterior elastomeric joint sealants on building materials which are subject to significant movement.	

Division 08	OPENINGS	Attachment
080000.	GENERAL: Include complete sections in the specifications for this division of the Work, in addition to notes indicated on drawings. The Design Team is responsible for complete coordination of statements in the specifications and the notes on the drawings.	
080000.1	EXTERIOR DOORS shall be metal or Storefront with glass, where possible.	
080000.2	MULTIPLE EXTERIOR DOORS shall have fixed mullion separations except that at least one pair of doors shall have a removable mullion for equipment access as specified by Metro General Services.	
080000.3	DOORS FOR USE BY PERSONS WITH DISABILITIES: Confer with Metro General Services and the ADA Specialist on Power Door Operators. Revolving doors at entrances and other restrictive locations require provision for alternative means of access.	
080000.4	LABELED CONSTRUCTION AND LABELS shall be provided where required by the building code.	
080000.5	TRASH ROOM DOORS and Recycle Room Doors shall be no less than 3'-6" wide.	
080000.6	DATA CLOSET DOORS are required to have 1 Hour Fire Rating on Doors/Door Hardware	
080000.7	USE OF INK MARKING PENS ON SURFACES of any kind of materials is prohibited. Experience has shown that such marks bleed through paint and other finishes.	
080000.8	DOORS AND FRAMES Include wall stops, door silencers and door frame protection.	
080000.9	WINDOWS to be designed for energy conservation. See GLAZING	
080000.10	ROOF WINDOWS AND SKYLIGHTS: Skylights are prohibited unless special permission is received from Metro General Services.	
080000.11	CLAD WINDOWS (clad with vinyl or aluminum on the exterior) are prohibited unless special permission is received from Metro General Services in writing.	
	GLAZING: Glass in entrances and storefronts shall be fully tempered (FT).	
080000.12	**REFERENCE STANDARDS**	
080000.12.1	EXTERIOR DOORS Shall Meet ASTM A653.	
080000.12.2	HOLLOW METAL FRAMES shall meet ASTM A653.	
080000.12.3	ALUMINUM WINDOWS shall have a thermal barrier and be certified and labeled with AAMA certification.	
080000.12.4	ALL LOCKSETS AND LATCH SETS must conform to ANSI A156.13, Series 1000, Operational Grade 1 and Security Grade 2 and be listed by UL.	
	GUARANTEE: Interior doors, except some fire rated doors, shall be flush type, solid core, and hardwood, with lifetime guarantee. Guarantee shall include removal, new door finishing, and hanging of doors at no cost to Metro General Services.	
081200.	**HOLLOW METAL FRAMES**	
081200.1	GENERAL: Comply with ANSI/SDI A250.8 and with details indicated for type and profile.	
081200.2	EXTERIOR FRAMES: All frames shall be one-piece, welded frames of not less than 16-gauge hot dipped zinc-coated steel sheets (Galvannealed) meeting ASTM A653, zinc-iron alloy-coated. All entrance door frames shall be heavily reinforced at hinge, strike and closer locations for “High Frequency” use. Fabricate frames with mitered or coped corner. Fabricate frames as full profile welded unless otherwise indicated.	
081200.3	INTERIOR FRAMES: One-piece, welded frames of not less than 16-gauge hot dipped zinc-coated steel sheets (Galvannealed) meeting ASTM A653, zinc-iron alloy-coated. Frames in interior walls through 8-inch thickness shall be full width of wall. Fabricate frames with mitered or coped corner. Fabricate frames as full profile welded unless otherwise indicated. Hardware Reinforcement: Fabricate according to ANSI/SDI A250.6 with reinforcement plates from same material as frames.	

Division 08	OPENINGS	Attachment
081300.	**HOLLOW METAL DOORS**	
081300.1	EXTERIOR DOORS shall be not less than 16-gauge hot dipped zinc-coated steel sheets (Galv-annealed), zinc-iron alloy-coated, with A60 coating. The top channel of each metal door shall be turned web up, to avoid a dirt pocket or moisture trap. Full glazed doors shall have 12-inch bottom rails. "High Frequency" hinged reparation and reinforcement is required.	
081300.2	INTERIOR DOORS (for mechanical rooms) shall be not less than 16-gauge metal. Full glazed doors shall have 12-inch bottom rails.	
082000.	**WOOD AND PLASTIC LAMINATE FACED DOORS**	
082000.1	WOOD DOORS shall be at least 1-3/4" thick.	
082000.2	FIRE RATED DOORS: 2 hr. (120-minute), 1-1/2 hr. (90-minute), 3/4 hr. (45-minute) and 20-minute doors must have a U.L. label per NFPA Pamphlet 80. Mineral Core labeled doors are prohibited because the narrow rails and stiles required to obtain U.L. approval, are expected to reduce the service life and security of these doors in rigorous service.	
082000.3	WOOD VENEERS: Judicious selection of face veneers shall be exercised. The Contractor shall be required to make a grain selection, prior to placing wood doors in the more prominent or public places, subject to the approval of the Metro General Services. Wood doors in, or adjacent to, wood paneling will have veneers to match the paneling.	
083000.	**SPECIAL DOORS**: Access doors shall be provided to equipment spaces, plumbing chases, etc. The doors shall be metal doors in 4-sided steel frames. Coordinate with Plumbing and HVAC Contractors. Type to be reviewed and approved by Metro General Services. Minimum size 2'-0" by 4'-0", with the approval of Metro General Services. All lockable access doors shall be equipped with Metro General Service Best Access Systems cylinders.	
084000.	**ALUMINUM ENTRANCES AND STOREFRONTS**	
084000.1	ALL PRODUCTS listed in this section shall be by the same manufacturer.	
084000.2	ALUMINUM DOORS AND FRAMES shall be factory finished.	
084000.3	Test reports shall be accompanied by the entrance door manufacturer's letter of certification stating that the tested door meets or exceeds the referenced criteria for the appropriate AAMA door type.	
084000.4	Narrow stile and narrow top and bottom rail aluminum doors are prohibited. Dimensions of components shall be at least: Metal thickness - 1/8 inch Head rail size - 6-1/2 x 1-3/4 or 6 x 2 inches Stile size - 5-1/2 x 1-3/4 or 5 x 2 inches Bottom rail size - 12-1/2 x 1-3/4 or 12 x 2 inches Hardware reinforcement - 1/4 inch thick metal material	
084000.5	Doors shall be fully glazed.	
084000.5.1	Doors may have a mid-rail located at the center of the exit device.	
084000.6	ENTRANCE FRAMES: Dimensions of components shall be at least: Metal thickness - 1/8 inch Head size - 4-1/2 x 1-3/4 or 4 x 2 inches Jamb size - 4-1/2 x 1-3/4 or 4 x 2 inches Hardware reinforcement - 1/4 inch thick metal material	

Division 08	OPENINGS	Attachment
085000.	**WINDOWS**	
085000.1	PERFORMANCE REQUIREMENTS: The manufacturer shall submit copies of reports of tests made on previously manufactured windows of the same type to be furnished for this project, made or witnessed by an independent testing laboratory and showing conformance to the following performance standards: Air infiltration of an assembled sash and frame shall not exceed 0.15 cubic feet per minute, per foot of sash perimeter, when the window is subjected to a static pressure equivalent to a wind velocity of 50 miles per hour. There shall be no apparent water leakage to the interior side of the window when tested for fifteen minutes with water spray at a rate of five gallons per square foot per hour under a pressure equivalent to a wind velocity of 50 miles per hour.	
085000.2	All aluminum windows shall have a thermal barrier and be certified and labeled with AAMA certification.	
085000.3	GLAZING METHOD: Windows shall preferably be designed for glazing from inside only; for other methods of glazing, confer with Metro General Services.	
085000.4	DESIGN: Avoid sliding and double-hung sash; use hoppers and types with compression gaskets.	
085000.5	TESTING: Field testing of non-standard installed windows may be required by Metro General Services.	
	WINDOW GUARANTEE: Provide a written guarantee that all parts of the installation will meet specified performance requirements and will be free from defects in materials and workmanship for a period of five years following acceptance. Weather stripping shall be guaranteed for a period of five years. Guarantee shall certify that all work is in accordance with the Contract Documents and shall contain a statement that, should any defects develop during the guarantee period, caused by improper workmanship or materials, such defects will be repaired or windows will be replaced at no expense to Metro General Services and the Library Project Team.	

Division 08	OPENINGS	Attachment
087000.	**FINISH HARDWARE**	**Follows**
087000.1	HARDWARE ALLOWANCE: Consult Metro General Services regarding provisions for a contingency allowance to cover items inadvertently omitted in hardware schedules. Provisions for this allowance might be particularly desirable for remodeling projects in which some existing hardware is scheduled for reinstallation. Allowance stipulated should not exceed 1/2 of 1 percent of the estimated cost of contract subdivision for finish hardware. Permission to specify this allowance shall in no way relieve the Designer Builder of responsibility to furnish a complete and accurate hardware schedule.	
087000.2	FINISH HARDWARE GUARANTEE : All mortise locksets must have a minimum 3 year manufacturer's warranty. All door closers must have a minimum 10-year manufacturer's warranty. All exit devices must have a minimum 3-year manufacturer's warranty.	
087000.3	POWER DOOR OPERATOR MANUALS in triplicate shall be provided to Metro General Services and the Library Project Team showing templates, wiring diagrams and full maintenance instructions.	
087000.4	INSTALLATION: ALL HARDWARE to be installed per manufacturers specifications. Failure to follow specifications will result in door hardware and security system malfunctions. Door hardware, electrical, and security contractors shall coordinate the installation and adjustment of door hardware components to perform as part of an integrated Card Access and Alarm Monitoring System.	
087000.5	CONSTRUCTION: A COORDINATION MEETING for the electrical contractor, security vendor and the hardware supplier is required prior to the creation of shop drawings on projects that require card readers or similar electronic access devices.	
087000.6	CLOSERS FOR INTERIOR DOORS shall be installed on room side of doors and shall not be visible from corridors, lobbies, and other public spaces.	
087000.7	THE BUILDER SHALL INSTALL THE FINAL KEY CORES in lock sets during the construction period. Provide an allowance for this work after consulting with Metro General Services for current/projected charges per core.	
088000.	**GLAZING**	
088000.1	Use Fire Resistant Glass in lieu of wire glass	
088000.2	Glass for exterior aluminum doors shall be 1/4 inch thick laminated safety glass, or an approved equal.	
088000.3	Design to eliminate partial shading of insulating glass. Avoid partial shading of large panes which can cause stress breakages. Manufacturers consider this to be a design error and will not replace glass broken by temperature differential stresses.	
088000.4	INSULATING GLASS: The following paragraph shall be included in the specifications; edit the heading to apply to the particular type of glass specified.	
088000.5	"Insulating and Reflective Insulating Glass, Guarantee: Provide manufacturer's written guarantee that, for ten years from date of building completion, a replacement will be provided for any unit which develops edge separation or other defects which materially obstruct vision through the glass or safety or affects the insulating qualities; except, that guarantee shall not cover glass breakage from physical abuse, earthquake, storm, or similar causes."	
088000.5.1	"Insulating and Reflective Insulating Glass, Guarantee: Provide manufacturer's written guarantee that, for ten years from date of building completion, a replacement will be provided for any unit which develops edge separation or other defects which materially obstruct vision through the glass or safety or affects the insulating qualities; except, that guarantee shall not cover glass breakage from physical abuse, earthquake, storm, or similar causes."	

DIVISION 08 - HARDWARE

PART 1 - GENERAL

A. HARDWARE

1. Specifications Format: It is preferred that this section include all items of finish hardware, including items listed in the CSI MASTERFORMAT, with the exception of window operators, which should be included with section in which windows are specified.
2. Such a format will facilitate the writing of hardware specifications in the form usually used by Architectural Hardware Consultants.
3. Hardware for Entrance Doors:
   a. All hardware for such doors shall be furnished by the hardware supplier.
   b. Weather seals for aluminum entrance doors shall be provided by the door supplier.
   c. With the exception of hardware furnished and installed by the door manufacturer, all hardware for such doors shall be furnished under this section.
   d. The hardware supplier shall furnish, to the door manufacturer, templates or the actual items of hardware for which cutouts and sink ages are required.
4. Pulls:
   a. Bases for grips shall project straight out, perpendicular to face of door.
      1) No curved bases.
5. Removable Mullions: A minimum of one pair of exterior double doors shall have a keyed, removable mullion with lock strike unless approval is given by Metro General Services to deviate from this requirement.

B. FINISH HARDWARE

1. Butts:
   a. Five-knuckle, wrought-steel.
   b. Specify ball bearing butts for doors equipped with closers.
   c. Butts shall be heavy duty, with 4 bb for exterior doors and interior doors over 3 feet wide; use standard weight butts with 2 bb for interior doors up to 3 feet wide.
   d. Specify non-bb for all doors without closers.
2. Stainless Steel Butts must be used on exterior doors.
   a. Continuous stainless steel hinges may also be used, except at security/electrified doors.
3. Locks:
   a. Locksets and latchsets shall be BEST with heavy duty mortise type with hinged, anti– friction, ¾ inch throw latchbolt with anti-friction piece made of self lubricating stainless steel.
   b. Deadbolt function shall be 1-inch projection with two hardened steel roll pins.
   c. All locksets to be supplied by the same manufacturer.
   d. Unless instructed otherwise by Metro General Services, select locksets and latchsets having the following functions, specifications, or door schedules shall show both the Building Hardware Manufacturers Association (BHMA) and the manufacturer's numbers to aid checking of documents and reduce the opportunity for error in function.

Door Location or Usage	BHMA No.	Function
High Security	F12	Latch bolt by lever either side unless outside lever locked by stop button; when outside lever locked, latch bolt by key outside and lever inside; dead bolt by key outside and turn piece inside; continuous turn of key retracts both latch and dead

		bolt.
Normal Office	F04	Latch bolt by lever either side unless outside lever locked by stop button; when outside lever locked, latch bolt by key outside and lever inside; auxiliary latch deadlocks latch bolt.
Private Office Door	F07	Latch by lever inside and key Mechanical Equipment outside; outside lever rigid; Rooms, Storage auxiliary latch deadlocks Closets latch bolt.
Communicating Doors	F01	Latch bolt by lever either side.
Pipe Chase	* *	Classroom Function Deadbolt By key outside; turnpiece inside will retract dead bolt but will not project it; no levers.
Outside Entrance Door	** **	Verify function with GS Lockshop Outside by key only; pull handle outside with no thumb piece; panic bar with dogging by keyed cylinder; latch bolt, no vertical rod.
Bath/Privacy	F22	Latchbolt retracted by lever or knob from either side unless outside is locked by inside turn piece. Operating inside lever/knob or closing door unlocks lever/knob. To unlock from outside, remove emergency button, insert emergency turn (furnished) in access hole and rotate.

4. Keying:
   a. Include the following paragraph in the specifications:

   "Locking Devices shall be equipped with Metro General Service Best Access Systems cylinders for security while the building is under construction, locks shall be equipped with temporary keyed brass construction cores furnished by the Best Access Systems and installed by the General Contractor. Following approval by Metro General Services the Using Agency of the final keying schedule. Metro General Services will combinate permanent cores, cut, and tag keys and deliver cores and keys directly in exchange for temporary cores removed by Metro General Services and returned to the General Contractor"
5. Cylinders for Miscellaneous Locks: Specify Metro General Services Best Systems for all locking devices specified in any division of the specifications.
   a. Ascertain that locking devices will accept Metro General Services BEST access cylinders.
6. Lever Handles shall be wrought brass, bronze or stainless steel of simple design, heavy duty, and must have inside lever handle secured in place by a dowel screw and the outside lever handle (secure side) pinned to the spindle.
7. Closers shall be surface mounted, non-handed, with full rack and pinion hydraulic action.
   a. Provide very heavy-duty type with broad range of adjustments permitting adjustment of door.
   b. Open pressure of 8 pounds to 15 pounds.
   c. Covers shall be of clean line design with lacquer finish and shall be type that does require removal to make adjustments.
   d. Closers for interior doors shall be installed on room side of doors and shall not be visible from corridors, lobbies, and other public spaces.
8. Stops: Wall mounted convex rubber bumpers, with concealed fasteners.
   a. Provide blocking in wall as required for bumper installation
9. Overhead Stops and Holders: Size as recommended by the manufacturer.
   a. Degree of opening, as determined by building conditions.

10. Flush Bolts: Specify extension type, top and bottom; avoid the use of vertical bars, either concealed or exposed.
11. Kick Plates: Plastic laminate, stainless steel and bronze kick plates are acceptable for wood doors.
12. Finishes:
    a. Closers shall be finished to suit room decor.
    b. For all other hardware, specify US-10 or US-26D.
    c. Other finishes may be used only where necessary to match materials to which hardware is applied.

C. POWER DOOR OPERATORS

1. Power Door Operators providing access for individuals with disabilities may be surface-mounted.
    a. Concealed operators are not permitted.
    b. All operator switches providing access for individuals with disabilities shall be 6 inches in diameter with the handicapped logo.
2. Electric Operator Switches may be wall-mounted or post-mounted.
3. Installation and Equipment shall be provided by a factory authorized and trained distributor.
4. Operator System - As approved by Metro General Services ADA Specialist.
5. Automatic Reset is required.
    a. If the door is locked or if door encounters an obstacle when the operator is activated, the operator system will do one of the following:
        1) Continue to push gently on the door until the time delay period expires, then close.
        2) Sense the resistance, shut off power and close.
6. Operator Systems shall have:
    a. Adjustable time delay period (opening time plus hold-open time) shall be approximately 20 seconds, adjustable from at least 40 seconds to 7 seconds minimum.
    b. Adjustable opening speed (time from activation until door is fully open) shall be approximately 7 seconds, adjustable from at least 11 seconds to 5 seconds minimum.
    c. Slow closing speed of approximately 7 seconds.
        1) Adjustability is desirable but not mandatory.
    d. Full compliance with ANSI/BHMA A156.10 and the International Building Code
    e. Weatherproof controls and circuitry.
    f. Low voltage current from operators to controls.
    g. Heavy-duty "supermarket" quality.
    h. Easy manual door operation.
        1) In event of power failure or pedestrian impatience, pressure on strike side of door equal to that required to open a conventional 36" wide door with closer shall be adequate to open the door manually.
        2) Maximum of 15lbs. Opening pressure.
    i. Easy access for maintenance. Access covers, if provided, must also have vandal resistant screw attachment.
    j. Operation must be smooth and quiet.
    k. Closer shall be spring type which functions with power on or off.
7. Provisions for Noise Control: On mechanical room doors, quiet study rooms, young adult room, story time room, multipurpose, and other doors where excessive noise is anticipated, the following shall be specified
    a. Door silencers
    b. Weatherstripping at heads and jambs and surface applied automatic door bottoms
8. Access Control/Central Security System – Doors, Frames and Hardware
    a. All card reader and/or electrically unlocked or monitored doors shall be equipped with Request to Exit functions and latchbolt monitoring integral to the door hardware.

b. Door position switches required for each door.
c. Card reader and/or electrically unlocked doors shall be operated as pairs where applicable.
d. Wiring in door frames shall be in conduit from the transfer hinge location to a junction box external to the frame for connection to the Metro General Services Access System.
e. Hardware equipped with a cylinder/core shall be installed such that the key retracts the latch only and the key action will not permit the door hardware to remain in an unlocked condition.
f. Continuous hinges/doors shall utilize Von Duprin EPT- 10 or equivalent power transfer hinges that are independent of the continuous hinge.
    1) No wired continuous hinges are permitted.

9. Door Application / Hardware Requirements - Central System Doors
    a. Exterior Doors with exit devices:
        1) Exit devices shall be equipped with
            a) Electric latch retract
            b) Cylinder dogging
            c) Pull handle (no thumb latch)
            d) Request to exit
            e) Latchbolt monitoring
            f) Door position
    b. Interior Doors with exit devices:
        1) Exit devices shall be equipped with
            a) Electric latch retract or electrically unlocking (fail secure) lever trim
            b) Request to exit
            c) Latchbolt monitoring
            d) Door position
    c. Fire Exit Doors: Exit device doors –
        1) Electrically locking lever trim (fail safe)
        2) Request to exit
        3) Latchbolt monitoring
        4) Door position
    d. Mortise lock doors:
        1) Electrically locking fail safe
            a) Temperature control devices may be required by some manufacturers
        2) Request to exit
        3) Latchbolt monitoring
        4) Door position
    e. Mortise Lock Doors:
        1) Fail Secure
        2) Request to exit
        3) Latchbolt monitoring
        4) Door position
    f. Power Transfer Hinges on Exit Devices –
    g. Mortise Locks - wired ball bearing transfer hinges.
    h. Delayed Egress Devices:
        1) Interior doors - Lever trim
        2) Exterior doors - Exit only function.
    i. Power Supplies:
        1) Per manufacturer's specifications.
    j. Auto opener/card reader operated door:
        1) Access system shall enable outside button upon authorized card swipe as determined by the card access system.
        2) A successful card readers shall not automatically energize the automatic opener.
        3) The interior button shall remain active at all times and provide a request to exit signal to the access system as well as initiate the auto opener.

4) There shall be a delay in the auto opener activation such that the door hardware latches are retracted fully before the auto opener begins the door open cycle.

PART 2 - PRODUCT

1.02 MATERIALS

A. PROHIBITED MATERIALS AND INSTALLATIONS:

1. Thresholds Raised Above Floof Levels at doors to trash and receiving rooms and over 1/2-inch high at doors along routes that are otherwise accessible or those intended for use of persons with disabilities.
2. Floor Mounted Doorstops.
3. Doorknobs or Levers Containing Lock Cores or Keying Devices.
4. Floor Closers and Closers Concealed in Doors Heads.
5. Door Closers With Integral Smoke Detectors: Smoke detection systems must be made a part of the documents for fire protection work.
6. All Surfaces Mounted and Concealed Vertical Rod Exit Devices unless approval is received from the Department of Physical Facilities Lock Shop.
7. Passive Infrared (PIR) Motion Detectors at door location for request to exit on alarmed doors.
8. Sectional Trim on mortise locksets.

B. PROHIBITED HARDWARE

1. No Vertical Rod hardware to be utilized on any card access system operated or monitored door.
2. No magnetic locks.

C. WIRED GLASS is not allowed.

D. QUALITY AND DESIGN:

1. Hardware must be adequate for the intended use and must satisfy code requirements, but shall not be excessively sophisticated or unnecessarily expensive.
2. Specifications for finish hardware shall be reviewed with Metro General Services and the using agency prior to completion of construction documents.
3. Make submittal at a time that will allow for adequate review and for making required changes before final printing.

E. STANDARDS AND APPROVED EQUALS:

1. For each item, specify and schedule products of one manufacturer as the standard and, whenever possible, name two other manufacturers whose products are proven equal.
2. A complete list of items proposed as the standards, together with manufacturers' names and with the names of manufacturers whose products are proposed as equals must be included in the outline specifications for the Basic Submittal.
   Approval of the items must be obtained from the Owner (Metro) before their inclusion in the hardware schedule in final documents. When the hardware schedule is approved, it must be marked Approved and signed by Metro before the Dealer will order. I schedule of locks must be sent to the Owner (Metro) for inclusion in their key control program.

1.03 MANUFACTURERS

A. LOCKSETS:

1. Stanley Security Solutions – Best Access Solutions – No Substitutions
   a. Cylindrical Locks
      93K Series
      15 Lever Style
      D Rose Style
      Plated finishes (per Metro/ Project Architect)
   b. Mortise Locks
      45H Series
      15 Lever
      J Escutcheon (per Metro/Project Architect)
      H Rose (per Metro/Project Architect)
      Plated finishes (per Metro/Project Architect)

B. CLOSERS:

1. Stanley Security Solutions – Best Access Solutions – No Substitutions
   a. Stanley Door Closers
      Exterior Doors – D4551 Series with EDA Arms
      Interior Doors – D3551 Series with Standard Arms on Interior or Extra Duty Arms where needed
      Painted finishes (per Metro/Project Architect)

C. EXIT DEVICES:

1. Stanley Security Solutions – Best Access Solutions – No Substitutions
   a. Precision Exit Devices
      Exterior (Aluminum Storefront Narrow Stile Doors)
      Apex Series – 2400 Series Rim
      Apex Series – 2600 Series Concealed Veritcal Rod
   b. Precision Exit Devices
      Interior (Hollow Metal and Wood Doors)
      Apex Series – 2100 Series Rim
      Apex Series – 2200 Series Surface Vertical Rod
      Apex Series – 2300 Series Mortise
      Apex Series – 2700 Series Concealed Vertical Rod (Wood Doors)
      Apex Series – 2800 Series Concealed Vertical Rod (Metal Doors)
   c. Finishes – standard – Plated or Stainless Steel (per Metro/Project Architect)

D. HANDICAP AUTOMATIC OPENERS:

1. Stanley Access Technologies – No Substitutions
   a. Stanley Magic Force Series
   b. Finishes – standard painted (per Metro/Project Architect)

E. ACCESS CONTROL/CENTRAL SECURITY SYSTEM – Doors, Frames and Hardware

1. Johnson Controls Inc. Pegasus P2000 Access Control System
2. Accepted equivalent equal.

F. POWER TRANSFER HINGES on Exit Devices:

1. Stanley Security Solutions – Best Access Systems – No Substitutions
   a. EPT-5 Power Transfer

G. DELAYED EGRESS EXIT DEVICES:

1. Stanley Security Solutions – Best Access Systems – No Substitutions
   a. Precision Exit Devices – available for all Precision Apex Series Exit Devices

H. BATTERY POWERED STAND-ALONE LOCKSET

1. Stanley Security Solutions – Best Access Systems – No Substitutions
   a. Cylindrical Locks
      1) 93KZ EZ Keypad Series
      2) 15 Lever Style
      3) Plated finishes (per Metro/Project Architect)
   b. Mortise Locks
      1) 45HZ EZ Keypad Series
      2) 15 Lever
      3) Plated finishes (per Metro/Project Architect)
   c. Exit Device
      1) EXZ EZ Keypad Series (to work with Precision Exit Device as Mfg. Stanley Security Solutions)
      2) 15 Lever

I. FIRE RESISTANT GLASS:
1. InfernoLite FRP 200 and 400 by Globe Amerada,
2. PyroEdge and Pyrobel by Interedge Technologies,
3. SuperLite I and SuperLite I-XL by SAFTI Division of O'Keefe's Inc.
4. FireLite and Pilkington Pyrostop by Technical Glass Products.

PART 3 - EXECUTION

1.04 INSTALLATION

A. ALL HARDWARE under this section to be installed per manufacturers specifications.

1. Failure to follow specifications will result in door hardware and security system malfunctions.
2. Door hardware, electrical, and security contractors shall coordinate the installation and adjustment of door hardware components to perform as part of an integrated Card Access and Alarm Monitoring System.

1.05 CONSTRUCTION

A. A COORDINATION MEETING for the electrical contractor, security vendor and the hardware supplier is required prior to the creation of shop drawings on projects that require card readers or similar electronic access devices.

B. CLOSERS FOR INTERIOR DOORS shall be installed on room side of doors and shall not be visible from corridors, lobbies, and other public spaces.

C. THE BUILDER SHALL INSTALL THE FINAL KEY CORES in lock sets during the construction period.

1. Provide an allowance for this work after consulting with Metro General Services for current/projected charges per core.

END OF DIVISION 08

Division 09	FINISHES	Attachment
090000.	GENERAL: Include complete sections in the specifications for this division of the Work, in addition to notes indicated on drawings. The Design-BuildTeam is responsible for complete coordination of statements in the specifications and the notes on the drawings.	
090000.1	GENERAL REQUIREMENTS	
090000.1.2	SUBMITTALS: Include physical samples (each product): all colors and patterns.	
090000.1.3	All materials, colors, finishes, product specifications, applications and details are to be selected by Metro General Services prior to the final development of the Construction Documents.	
090000.1.4	The Design-Builder Team shall clearly note all finishes and their extent of coverage on the drawings and specifications using room finish schedules and include notations on elevations and details. Architect to document material extents and selected finishes on Finish Plan for Metro Review at DD.	
090000.1.5	The Design-Builder shall prepare a schedule listing all surfaces in generic terms, coating or finish operations, the types of finish materials and number of coats of each material.	
090000.1.6	ATTIC STOCK: All attic stock shall be clearly marked as to what it is and where it is installed.	
090000.2	QUALITY ASSURANCE	
090000.2.1	PLASTER ASSEMBLIES: The use of plaster for ceilings and of stucco for exterior finish, including canopy soffits, is prohibited without written permission of Metro General Services.	
090000.2.2	REPAIR/ RESTORATION: The use of plaster for ceilings and of stucco for exterior finish, including canopy soffits, is permitted, with written permission of Metro General Services, for patching existing plastered surfaces. The Design-Builder may request permission to use these materials in limited areas, only if the situation is unique and architecturally demanding.	
090000.2.3	QUALITY ASSURANCE FLOORING: The Contractor shall include standard testing methods for determining Relative Humidity in concrete flooring and Moisture Vapor Emission Rate of concrete sub-floor per manufacturer's recommended testing procedure and manufacturer acceptable ranges are met. The Design-Builder shall outline Contractor responsibility for conducting the tests prior to installation.	

Division 09	FINISHES	Attachment
093000.	**TILING**	
093000.1	For designs where floor and wall tile indicate a pattern of colors, details shall be clearly detailed on the Construction Drawings using specific tile sizes, dimensions and details of all surfaces to receive tile. Architect to issue pattern drawings to Metro for review at DD.	
093000.2	All floor tile grout shall be sealed.	
093000.3	In frequently wet areas such as shower pools areas and kitchens, floor and wall grout shall be epoxy.	
093000.4	Grout joints shall be held between 1/8 inch, but not to exceed 1/4 inch. Follow ASTM Standards and TCA Standards for tile type and application.	
093000.5	ACCEPTABLE MANUFACTURERS: Crossville Tile, StonePeak, DalTile or approved equal by Metro General Services	
095000.	**CEILINGS**	
095000.1	All ceilings shall be designed to be easily accessible for maintenance and other access needs such as technology installations. Limited exceptions to this are special feature areas or specialized function areas where no accessibility is required.	
095000.2	Fire code gypsum board or fire rated acoustic tile with rated suspension assembly shall be used for fire-rated ceilings.	
095000.3	Drywall Ceilings: Hard gypsum ceilings shall be used in Fire Stations and in all project type public restrooms. Proper access doors, size and location, shall be installed to access above ceiling work.	
095100.	**ACOUSTICAL CEILINGS**	
095100.1	Mineral fiber lay-in type acoustic ceilings shall be specified.	
095100.2	Panels shall be a minimum of 5/8 inch thick and standard panel size of 2 ft x 2 ft is preferred; 2 ft x 4 ft is acceptable in back-of-house spaces. Coordinate above ceiling access.	
095100.3	A maximum of two types and sizes of acoustic ceiling panel shall be used throughout a building to minimize maintenance and repair costs. Label Attic Stock	
095100.4	The use of 3 foot tile and other non standard tile sizes is prohibited.	
095100.5	Flat or Tegular are acceptable.	
095100.6	Color should be white [Manufacturer's Standard White]	
095100.7	Recycled content: 25% Preconsumer, 100% Recyclable content, 0% Formaldehyde emissions.	
095300.	**ACOUSTICAL CEILING SUSPENSION ASSEMBLIES**	
095300.1	The requirements for independent supports for ceiling grid systems shall be repeated in the applicable sections of the specifications.	
095300.2	If patented ceiling suspension systems are required for plaster, gypsum board, and acoustic ceilings, a separate section may be written for the systems; or each separate system may be specified in the section for the particular ceiling material; however, it is preferred that suspension systems for acoustic ceilings be specified with the ceiling materials to avoid divided responsibilities.	
095300.3	Stainless steel hanger wires must be specified for canopy suspension systems and for other systems in locations subject to moisture penetration or condensation	

Division 09	FINISHES	Attachment
095300.4	CONSTRUCTION: Ceiling suspension assemblies shall be supported directly from the building structure, lay-in fluorescent light fixtures shall be supported at all four corners from the building structure.	
095300.4.1	Ceilings shall not be supported from ductwork, electrical conduit, heating or plumbing lines, and vice versa.	
095300.4.2	Each utility system and the ceiling grid system shall be a separate installation and each shall be independently supported from the building structure.	
095300.4.3	Where interferences occur, provide trapeze type hangers or other suitable supports for each system.	
095300.4.4	Locate hangers and supports where they will not interfere with access to mixing boxes, fire dampers, valves, and other appurtenances requiring servicing.	
096000.	**FLOORING**	
096000.1	INSTALLATION CONDITIONS: The Design-Builder shall specify critical Flooring Substrate Conditions appropriate to the material specified.	
096000.2	VCT must not be used unless approved by Metro.	
096223.	**BAMBOO FLOORING**	
096223.1	Species: Moso – Harvested between 5 ½ & 6 years.	
096223.2	Grain: Flat bamboo slats are laminated face up to form a three-ply solid plank with no internal voids.	
096223.3	Tongue & groove with micro beveled edges & ends. Sealed with factory applied seal coat.	
096223.4	ACCEPTABLE MANUFACTURERS Teragren or approved equal by Metro General Services	
096500.	**RESILIENT FLOORING [General Requirements]**	
096500.1	PERFORMANCE REQUIREMENTS: Provide products which have been tested and which meet or exceed the following slip resistant requirements under dry conditions: Floor and ground surfaces shall be stable, firm and slip resistant. a. Conform to the following fire test data: 1) Flame Spread: 75 or less 2) Smoke Density: 450 or less	
096500.2	WARRANTY: Meet or exceed 10 year material warranty.	
096500.3	CLEANING Immediately prior to final inspection, resilient flooring and base shall be cleaned as per the manufacturer's recommended guidelines and ready for final finishes.	
096500.4	Primers and Adhesives: Water-resistant, low VOC-emitting type, solvent-free, stabilized type recommended by flooring manufacturer compatible with substrate.	
096513.	**RESILIENT BASE MATERIALS**	
096513.1	Base to be 1/8 inch thick, rounded top edge and 4-inch minimum height.	
096513.2	Specify coved wall base with toe for all areas	
096513.3	Specify that internal and external corners be formed on the job with ~~joints~~ seems no less than 18-inches from corners.	

Division 09	FINISHES	Attachment
096513.4	Terminal ends of base shall be beveled and toes rounded.	
096513.5	Color to be integrated with the material.	
096513.6	Material must be rubber.	
096513.7	Manufacturer's standard coil lengths ONLY; 4 foot strips are prohibited.	
096513.8	ACCEPTABLE MANUFACTURERS: Roppe, Burke, Johnsonite, Armstrong	
096516.	**RUBBER SHEET FLOORING MATERIALS**	
096516.1	48 inch rolls	
096516.2	9mm thick	
096516.3	30 – 95% EPDM content [Ethylene Propylene Diene Monomer; a synthetic rubber]	
096516.4	ACCEPTABLE MANUFACTURERS: Everlast or approved equal by Metro General Services	
096519.	**RUBBER TILE MATERIALS**	
096519.1	Size: 18 x 18 tile	
096519.2	Thickness: 1/8" gauge	
096519.3	Oil and grease resistant	
096519.4	ACCEPTABLE MANUFACTURERS: Flexco, Roppe, Armstrong or approved equal by Metro General Services	
096519.	**LUXURY VINYL TILE MATERIALS**	
096519.1	Wear Layer Thickness: 20 mil (0.5mm) minimum.	
096519.2	10 year warranty	
096519.3	ACCEPTABLE MANUFACTURERS: Amtico/Estrie, Shaw, Mannington, Decoria or approved equal by Metro General Services	
096800.	**CARPET AND CARPET TILE**	
096800.1	MATERIALS: Commercial face fibers: 100% Nylon 6 for General space and Type 6,6 for High Traffic areas	
096800.2	CONSTRUCTION: Tufted, Textured or Level Loop Pile	
096800.3	PILE DENSITY: 20 oz Min / Pile Density 5,500 or higher	
096800.4	GAUGE: 1/10 gauge, minimum	
096800.5	DYE: Solution or Yarn Dyed	
096800.6	BACKING: Recyclable, non-pvc thermoplastic/polyolefin composite or approved equal.	
096800.7	RECYCLED CONTENT (1/2 Pre-consumer plus full value Post-Consumer), not less than the minimums listed below: Broadloom: minimum of 10%; Modular Tile: minimum of 30%.	
096800.8	Warranty: meet or exceed 10 year warranty	
096800.9	ACCEPTABLE MANUFACTURERS: Shaw, Mohawk, Mannington, or approved equal by Metro General Services	
096800.10	CARPET ADHESIVE Waterproof cement of type recommended by the manufacturer of the carpet tile.	
096800.11	CARPET RECLAMATION of existing carpet to be determined with potential vendor. When carpet is replaced, submit certification documentation from the reclamation facility to Metro General Services	

Division 09	FINISHES	Attachment
096800.12	INSTALLATIONS: In normal installations, carpet shall be glued to the substrate with no cushion or pad using premium quality waterproof non-flammable adhesive. Install carpet tile in strict accordance with the manufacturer's recommended methods of installation as approved by Metro. Install all required transition strips between every change in flooring type.	
096800.13	LOW EMITTING MATERIALS:	
096800.13.1	The carpet and floor adhesive (for glue-down installations) must meet the Green Label Plus (GLP) and floor adhesive (for direct glue down) must meet the requirements of the Carpet and Rug Institute (CRI).	
096800.13.2	GLP number must be provided.	
096800.14	Carpet and all installation components including adhesives, sealers, seam welds and seam sealers must meet the Low Emitting Materials standards as outlined in USGBC LEED criteria	
096800.15	Walk-Off Carpet TILE shall be provided at each main entry utilized by public and/or staff and walk-off mats (roll-out) must be provided at man-doors at loading dock areas or other entries. Walk-Off Carpet Tile shall be provided at floors of elevator cabs with Metro Approval. Walk-Off Carpet extends 10 feet in the direction of travel from the interior side of the entry door. Walk-Off Carpet shall be specifically designed for entryways i.e. not conventional carpet. A good entryway system should perform these three tasks: 1) Remove soil from the shoe. 2) Absorbs large amounts of dirt, slowing the rate of transfer onto interior carpet or surfaces. 3) Absorbs excess moisture from wet shoes, thereby reducing soiling on the interior carpet or surfaces.	
096800.16	CLEANING: Immediately prior to FF&E installation, all carpeted areas shall be cleaned and vacuumed of all construction debris and made ready for installation of FF&E. CONTRACTOR shall clean and vacuum.	
096800.17	FULL FLOOR PROTECTION: Ram Board to be used only; No tape or self-adhesive file permitted.	
099000.	**WALL FINISHES [Vinyl Wall Coverings, Only if specifically required by Metro]**	
099000.1	Selections shall be based on extra heavy-duty commercial wall finish, rated for intended use by the manufacturer.	
099000.2	Custom materials and colorations are prohibited as they increase later costs for repair and renovations.	
099000.3	All materials, colors, finishes, product specifications, applications and details are to be selected by Metro General Services prior to the final development of the Construction Documents.	
099000.4	The Design-Builder shall provide detailed specifications of at least 3 colors selections in 2 different color schemes to be selected and approved by Metro.	
099000.5	The Design-Builder shall specify products that can be obtained and installed by Contractors of an established firm, experienced in the installation of the specified product.	
099000.6	The specifications shall request Contractors to have completed at least three projects of equal size, material and complexity to verify experience.	

Division 09	FINISHES	Attachment
099000.7	VOC content limits per LEED requirements.	
099100.	**PAINTING AND COATING**	
099100.1	Preferred Brand Sherwin Williams: ProMar [SEE PAINT SCHEDULE]	
099100.2	**INTERIOR PAINTING**	
099100.2.1	TOP AND BOTTOM EDGES OF WOOD DOORS shall be sealed after fitting and finished with at least two coats of varnish or paint.	
099100.2.2	TOPS AND BOTTOMS OF METAL DOORS shall be painted with the same materials and number of coats as used on the door faces.	
099100.2.3	DRY FILM THICKNESSES shall be specified for all coats of paint on metals.	
099100.2.4	COLOR CODING FOR PIPING: Include finish painting of insulated and uninsulated piping in the General Construction Documents and include color banding of finished piping in the appropriate locations. See divisions in the Facilities Services Subgroup.	
099100.2.5	INTERIOR WOODWORK: Painted finish -- primer and 2 coats semi-gloss alkyd enamel.	
099100.2.6	METAL DOORS AND FRAMES: Shop coat, touch up and two coats semi-gloss enamel.	
099100.2.7	NEW GYPSUM WALLBOARD OR PLASTER: Spackle as required, primer and 2 coats semi-gloss alkyd enamel or 2 coats semi-gloss latex, unless otherwise specified by Metro General Services.	
099100.2.8	INTERIOR CONCRETE OR CONCRETE BLOCK (Unpainted): 1 coat self-sealing heavy filler-type primer and 2 coats semi-gloss alkyd enamel or 2 coats semi-gloss latex. For any areas requiring chemical resistance, replace the alkyd or latex paint with epoxy two-component finish. For corridors or abuse areas, replace the semi-gloss alkyd or latex paint with high gloss alkyd enamel.	
099100.3	**STAINING AND TRANSPARENT FINISHING**	
099100.3.1	INTERIOR WOODWORK: Stain; 2 coats sanding sealer, 2 coats semi- gloss varnish. If polyurethane varnish is used, delete sanding sealer.	
099100.3.2	TOP AND BOTTOM EDGES OF WOOD DOORS shall be sealed after fitting and finished with at least two coats of varnish or paint.	
099100.4	**HIGH PERFORMANCE COATINGS**	
099100.4.1	FIRE RETARDANT COATINGS	
099100.4.1.1	Materials shall be applied by applicators franchised and approved by manufacturers of materials approved for use.	
099100.4.1.2	General Contractor shall furnish the manufacturer's certification that materials delivered to the project meet requirements specified.	
099100.4.1.3	Certification shall be countersigned by the General Contractor, who shall assume the responsibility of complying with the manufacturer's specifications.	
099100.4.1.4	Materials and application equipment shall be of type approved by the manufacturer.	
099100.4.2	ELASTOMERIC COATINGS	
099100.4.2.1	If coatings specified can be applied with equipment ordinarily used by painters, these coatings may be specified in the section entitled, PAINTING.	
099100.4.3	SPECIAL COATINGS	
099100.4.3.1	CONCRETE AND MASONRY COATINGS	
099100.4.3.2	Mechanical Room and other Service Room floors in all buildings shall be completely sealed from water and moisture penetration to the floors below.	
099100.5	**SEE PAINT PRODUCT SCHEDULE ATTACHMENT**	**Follows**

DIVISION 09 – PAINTS AND COATINGS

A. WALL FINISHES
1. Sherwin Williams, Low VOC and/or NO VOC, - 2 Finish Coats
A. S-W ProMar 200 Zero VOC Interior Latex Paint
(Flat, B30-2600) (EgShel, B20-2600) (Semi-Gloss, B31-2600)
B. S-W Harmony Interior Latex Paint
(Flat, B5-500) (EgShel, B9-500) (Semi-Gloss, B10-500)

Both products are Zero VOC, Anti-Microbial, Tint with Zero VOC Tints systems, PM 200 has no color limitations, Harmony does not allow for some deep accent colors, Harmony reduces ambient room odors.
2. Or accepted equivalent equal as approved by Metro General Services..

1. INTERIOR PAINTING
a. TOP AND BOTTOM EDGES OF WOOD DOORS shall be sealed after fitting and finished with at least two coats of varnish or paint.
1) Clear Sealer:
a) 2 Finish Coats: S-W WoodClassics Waterborne Polyurethane Varnish, A68 series (Satin 309 g/l voc or Gloss 312 g/l voc)
2) Painted system:
a) 1 Finish Coat: S-W Multi-Purpose Zero VOC Int. / Ext. Latex Primer / Sealer, B51 Series (0 g/l voc)
b) 2 Finish Coats: S-W ProMar 200 Interior Waterbased Acrylic-Alkyd (Semi-Gloss, B34 Series 78 g/l voc) (Gloss, B35 Series (76 g/l voc)

b. TOPS AND BOTTOMS OF METAL DOORS shall be painted with the same materials and number of coats as used on the door faces.
1) Primer (if required)
a) 1 Finish Coat: S-W Pro Industrial Pro-Cryl Universal Water Based Primer, B66-310 Series (<100 g/l voc)
b) 2 Finish Coats: S-W Pro Industrial 0 VOC Acrylic, B66-600 Series (Semi-Gloss, B66-650 0 g/l voc) (Gloss, B66-600 0 g/l voc)

c. DRY FILM THICKNESSES shall be specified for all coats of paint on metals.

d. COLOR CODING FOR PIPING: Include finish painting of insulated and uninsulated piping in the General Construction Documents and include color banding of finished piping in the appropriate locations. See divisions in the Facilities Services Subgroup.
e. INTERIOR WOODWORK: Painted finish -- primer and 2 coats semi-gloss alkyd enamel.
a) 1 Finish Coat: S-W Multi-Purpose Zero VOC Int. / Ext. Latex Primer / Sealer, B51 Series (0 g/l voc)
b) 2 Finish Coats: S-W ProMar 200 Interior Waterbased Acrylic-Alkyd (Semi-Gloss, B34 Series 78 g/l voc) (Gloss, B35 Series (76 g/l voc)

f. METAL DOORS AND FRAMES: Shop coat, touch up and two coats semi-gloss enamel.
a) 1 Finish Coat: S-W Pro Industrial Pro-Cryl Universal Water Based Primer, B66-310 Series (<100 g/l voc)
b) 2 Finish Coats: S-W Pro Industrial 0 VOC Acrylic, B66-600 Series (Semi-Gloss, B66-650 0 g/l voc) (Gloss, B66-600 0 g/l voc)

g. NEW GYPSUM WALLBOARD OR PLASTER: Spackle as required, primer and 2 coats semi-gloss alkyd enamel or 2 coats semi-gloss latex, unless otherwise specified by Metro General Services.
   1) Primer: S-W ProMar 200 Zero VOC Interior Latex Primer, B26-2800 (0 g/l voc)
      a) 2 Finish Coats: S-W ProMar 200 Interior Waterbased Acrylic-Alkyd (Semi-Gloss, B34 Series 78 g/l voc)
   Or b) 2 Finish Coats: S-W ProMar 200 Zero VOC Interior Latex Paint (Semi-Gloss, B31-2600)

h. INTERIOR CONCRETE OR CONCRETE BLOCK (Unpainted): 1 coat self-sealing heavy filler-type primer and 2 coats semi-gloss alkyd enamel or 2 coats semi-gloss latex. For any areas requiring chemical resistance, replace the alkyd or latex paint with epoxy two-component finish. For corridors or abuse areas, replace the semi-gloss alkyd or latex paint with high gloss alkyd enamel.
   1) Block Filler: S-W PrepRite Interior / Exterior Block Filler, B25W25 (<50 g/l voc)
      a) 2 Finish Coats: S-W ProMar 200 Interior Waterbased Acrylic-Alkyd (Semi-Gloss, B34 Series 78 g/l voc)
   Or b) 2 Finish Coats: S-W ProMar 200 Zero VOC Interior Latex Paint (Semi-Gloss, B31-2600)

Epoxy Finish systems:
   1) Block Filler: S-W PrepRite Interior / Exterior Block Filler, B25W25 (<50 g/l voc)
      a) 2 Finish Coats: Pro Industrial Pre-Catalyzed Waterbased Epoxy (EgShel, K45W151 143 g/l voc) (Semi-Gloss, K46W151 145 g/l voc)
   Or b) 2 Finish Coats: Pro Industrial Zero VOC Waterborne Catalyzed Epoxy (EgShel, B73-360 series 0 g/l voc) (Gloss, B73-300 series 0 g/l voc) (Hardener, B73V300)
      Optional Block filler: S-W Heavy Duty Block Filler, B42W46 (<50 g/l voc)

B. STAINING AND TRANSPARENT FINISHING

1. INTERIOR WOODWORK:
   a. Stain: S-W WoodClassics Interior Wood Stain, A49 Series (524 g/l voc)
      Or S-W WoodClassics “250” Interior Wood Stain, A49-800 (<250 g/l voc)
   b. 2 coats sanding sealer, S-W WoodClassics FastDry Sanding Sealer, B26V43 (522 g/l voc)
   c. 2 coats semi- gloss varnish.
      S-W WoodClassics Waterborne Polyurethane Varnish, A68 series (Satin 309 g/l voc or Gloss 312 g/l voc)
      1) If polyurethane varnish is used, delete sanding sealer.
   d. TOP AND BOTTOM EDGES OF WOOD DOORS shall be sealed after fitting and finished with at least two coats of varnish or paint.
      1) Clear Sealer:
         a) 2 Finish Coats: S-W WoodClassics Waterborne Polyurethane Varnish, A68 series (Satin 309 g/l voc or Gloss 312 g/l voc)
      2) Painted system:
         a) 1 Finish Coat: S-W Multi-Purpose Zero VOC Int. / Ext. Latex Primer / Sealer, B51 Series (0 g/l voc)
         b) 2 Finish Coats: S-W ProMar 200 Interior Waterbased Acrylic-Alkyd (Semi-Gloss, B34 Series 78 g/l voc) (Gloss, B35 Series (76 g/l voc)

2. EXTERIOR WOOD PLATFORMS OR BENCHES:
   a. Use Behr plus 10 Solid Color Stain
   b. S-W DeckScapes Exterior Waterborne Solid Color Stain, A15 Series
   c. Or approved equal in accordance with manufacturer's directions.

C. HIGH PERFORMANCE COATINGS

1. FIRE RETARDANT COATINGS
   a. Materials shall be applied by applicators franchised and approved by manufacturers of materials approved for use.
   b. General Contractor shall furnish the manufacturer's certification that materials delivered to the project meet requirements specified.
   c. Certification shall be countersigned by the General Contractor, who shall assume the responsibility of complying with the manufacturer's specifications.
   d. Materials and application equipment shall be of type approved by the manufacturer.

2. ELASTOMERIC COATINGS
   a. If coatings specified can be applied with equipment ordinarily used by painters, these coatings may be specified in the section entitled, PAINTING.
      S-W Products as standards of performance
      1) S-W Sherlastic Elastomeric Coating, A5-100 applied as per data page
      2) S-W Conflex XP High Performance Elastomeric, A5-400 applied as per data page
      3) S-W Loxon XP Zero VOC Waterproofing System, A24 Series applied as per data page

3. SPECIAL COATINGS
   a. CONCRETE AND MASONRY COATINGS
      1) Mechanical Room and other Service Room floors in all buildings shall be completely sealed from water and moisture penetration to the floors below.
      2) 1 coat: ArmorSeal Tread-Plex Primer (optional)
         2 Finish Coats: ArmorSeal Tread-Plex Water Based Acrylic Floor Coating, B90-100 Series (<100 g/l voc)

END OF DIVISION 09

Division 10	SPECIALTIES	Attachment
100000.	GENERAL: Include complete sections in the specifications for this division of the Work, in addition to notes indicated on drawings. The Design-Builder Team is responsible for complete coordination of statements in the specifications and the notes on the drawings.	
100000.1	GENERAL PROVISIONS	
100000.2	DESIGNS: The Design-Builder shall provide layouts of all Specialties to determine function and space use for the project. Submittals are required as outlined in the Design-Builder Agreement for Basic Services.	
100000.3	CONSTRUCTION COORDINATION: The Design-Builder shall clearly define Contractor responsibilities relative to receiving, storage and installing all items in this Division.	
100000.4	The Design-Builder is to locate and coordinate all blocking, support and services for installation of all items in this Division.	
101123.	**TACKBOARDS [Locations and Sizes Provided on the Equipment / Furnishing Schedule]**	
101123.1	DESIGNS: In public corridors and lobbies, the Designer-Builder shall make provisions for tack board and display areas as required by the project. These tack boards and display areas shall be integrated into the architectural design of the building. The Designer-Builder shall be alerted to coordinate room signage, donor plaques, artwork and other graphics if these are scheduled to be in the same location. All product specifications, accessory items, colors, finishes, applications and details are to be reviewed and approved by Metro General Services prior to the final development of the Construction Documents.	
101123.2	BUDGET ALLOCATIONS: Tackboards are considered Fixed Equipment and are funded within the Construction Budget.	
101123.3	MATERIALS AND CONSTRUCTION: Tackboards shall be fabric faced or cork laminated to 1/2" thick mineral fiber board. Provide fabric and tackable core to meet all current flame-spread rating standards.	
101400.	**SIGNAGE**	
101400.1	DESIGNS: The Design-Builder shall provide the functional and code signage needed for the Project. All signage will be reviewed and approved by Metro General Services' Project Team. All signage will be ADA Compliant.	
101400.2	Building identification sign - At least one (1) sign at the primary entrance to the building and two (2) site signs. The Designer-Builder shall design all building and site signage with review and approval by Metro General Services. A sign will be placed near the main entrance in landscaped area or lawn, oriented in such a way that the faces of the signs are perpendicular to the flow of traffic. Other site signage locations shall be determined during the project's design. Building ID Sign to contain the Street Number. Street Number to be provided above the front door.	
101400.3	Building Signs – Designed to meet community guidelines and to identify the full name of the building on prominent exterior sides.	
101400.4	Interior Signs – required at each room including room number, room name and Braille identification to meet all ADA Requirements. Note: Metro to provide and review all room numbering per the Metro Room Numbering System.	
101400.4.1	Handicapped Parking designation to be painted on pavement.	
101400.4.2	Where applicable in scope: Include site, directional and assigned parking.	

Division 10	SPECIALTIES	Attachment
101400.5	MATERIALS: Materials used to create signs will produce a uniform look throughout the facility and must withstand general facility use. The materials must be nonporous, easy to maintain and be cleaned with a nonabrasive cleaner. Individually glued on or hand positioned letters and Braille cells are unacceptable.	
101400.6	INSTALLATION: All signage will be installed by the Designer/Builder on the latch side of the door if practical. No signage will be installed on the doors or the door frame. The Designer/Builder will need to determine appropriate installation methods upon review of adjacent wall finish and in review with Metro General Services.	
101400.7	Life Safety Signage – required per code.	
101400.8	BUDGET ALLOCATIONS: All signage is considered Specialty items or Fixed Equipment and shall be included in the Construction Documents unless otherwise directed.	
101400.9	ALLOWANCES: Reference inclusions within various sections of the Design Criteria Package, Program Matrix and attachments for allowances.	
101416.	**PLAQUES**	
101416.1	DESIGNS: Each new or renovated building shall have at least one Building Dedication Plaque and may have numerous Recognition plaques or areas of recognition. Consult with Metro General Services and the Project Team for details applicable to each project.	
101416.2	BUILDING DEDICATION PLAQUE: For new buildings, the Designer/Builder shall make provisions for a wall area in the main lobby or in the vestibule to the main lobby to be used for installation of an 18-inch x 24-inch bronze dedication plaque. The wall area shall be architecturally designed to provide an aesthetic setting for the plaque and shall be adequately lighted. The plaque is to be part of the Construction Documents. The Designer/Builder shall provide adequate blocking or other materials to support the Plaque as part of the Construction Documents.	
101416.3	RECOGNITION AND ROOM PLAQUES: The Designer/Builder shall be aware of and make provisions (space, applicable blocking, utilities and lighting) in the building for donor recognition areas and room plaques. Recognition items and the design of recognition graphics maybe funded outside the project budget. Metro General Services and the Project Team is responsible for directing the design and installation of recognition.	
102113.	**TOILET COMPARTMENTS**	
102113.1	DESIGNS: All product specifications, accessory items, colors, finishes, applications and details are to be reviewed and approved by Metro General Services prior to the final development of the Construction Documents.	
102113.2	MATERIALS: Sierra Series® water- and fire-resistant solid Color Reinforced Composite Toilet partitions and Urinal screens 1090 Series with GraffitiOff™ Surface or similar as approved by Metro General Services and the Project Team.	
102113.3	Anchors and fasteners: Vandal type screw anchors, toggle bolts, hollow wall anchors or other approved type to suit construction on which items are hung. Wood, lead and plastic plugs are prohibited.	
102113.4	Door latches and pulls: Specify slide latches and pulls for out-swinging doors.	

Division 10	SPECIALTIES	Attachment
102113.5	Coat Hooks: Coat hooks shall be constructed of stainless steel and shall project no more than 1-1/8" from face of door, they shall be secured to door be through-bolted, theft-resistant, pin-in-head Torx stainless steel screws. Through-bolted fasteners shall withstand a direct pull force exceeding 1,500 lbs. per fastener.	
102113.6	ADA COMPLIANT TOILET PARTITIONS: Standard ceiling mounted partitions all toilet stalls designated usable by individuals with disabilities shall meet current ADA Standards.	
102600.	**WALL PROTECTION, CORNER GUARDS**	
102600.1	Specify Acrovyn Products	
102800.	**TOILET ACCESSORIES**	**H**
102800.1	DESIGNS: All product specifications, accessory items, colors, finishes, applications and details are to be reviewed and approved by Metro General Services prior to the final development of the Construction Documents. Metro General Services has selected standard products for use. All proposals shall require approval of Metro General Services prior to finalization of the Construction Documents.	
102800.2	BUDGET ALLOCATIONS: Toilet Accessories are considered Fixed Equipment and shall be included in the Construction Documents.	
102800.3	SCHEDULE: includes but not limited to (provide Bobrick or equal if not noted on referenced Design Criteria Package Program Matrix and attachments for additional inclusions. (OFCI, CFCI) (Kimberly Clark Products) indicated.	
104413.	**FIRE EXTINGUISHER CABINETS**	
104413.1	DESIGNS: All portable fire extinguishers and non-valve cabinets shall be furnished and installed by the Designer/Builder. All portable fire extinguishers and components shall conform with National Fire Protection Association (NFPA) Pamphlet 10, latest edition. Each extinguisher shall be approved by Underwriter's Laboratory (UL) and bear their label.	
104413.1.1	Provide each locked, break glass fronted fire equipment cabinet with a knocker or other glass breaking means. Attach knocker in a manner that will allow breaking of glass without removing knocker.	
104413.1.2	An acceptable means of identifying fire extinguisher location must be done by an arrow type sign. See Appendix A, a-1-6.5 of NFPA pamphlet 10.	
104413.1.3	Cabinets shall be painted steel, flanged recessed (similar to fire hose cabinets), lockable and comparable to the preferred Duo Panel Break Glass style of cabinet manufactured by Larsen's Fire Protection and Safety Equipment. Lock shall be manufactured by Detroit Auto Specialties and shall have a CH751 key. The full fire rating and acoustical rating of the structure walls must be maintained.	
104413.1.4	Refer to NFPA pamphlet 10, chapters 2, 3, and 4. Chapter 2 is used to determine the classification of potential fires and the rating or relative fire extinguishing effectiveness of various types of extinguishers. Chapter 3 assists in selection of extinguishers which is dependent upon the character of anticipated fires, property construction and occupancy, the vehicle or hazard to be protected, ambient temperature conditions, and other factors. The maintenance of extinguishers is determined by Chapter 4.	

Division 10	SPECIALTIES	Attachment
104413.2	APPROVALS: The selection and locations of fire extinguishers are subject to the review and approval of Metro General Services personnel. Extinguishers meeting the described requirements, including those manufactured by Fire Chief, Kidde, and General, will be considered for acceptance.	
104413.3	CONSTRUCTION COORDINATION: Penetration of walls by cabinets or other penetrations, unless openings and voids are sealed with fireproof materials, is prohibited. Fire-rated walls must not have the rating reduced by penetrations or reduction of thickness.	
104416.	**FIRE EXTINGUISHERS**	
104416.1	DESIGNS: All fire extinguishers are to be complete, tested, certified, ready for use, and conform to the following:	
104416.1.1	CARBON DIOXIDE EXTINGUISHERS: Red enameled-steel or aluminum equipped with valve, discharge hose and horn, squeeze-grip lever, and mounting bracket, if not cabinet installed. Minimum rating 5 BC.	
104416.1.2	MULTI-PURPOSE EXTINGUISHERS: Red enameled-steel, pressurized type equipped with pressure gauge, discharge nozzle, squeeze-grip lever, and mounting bracket, if not cabinet installed. These extinguishers are dry chemical for Class A, B, and C fires. Minimum rating 4A 60 BC.	
104416.1.3	SPECIAL EXTINGUISHERS: Fully equipped types for use on the specific Class D combustible metal hazards and Class K Food Service Operations.	
105113.	**METAL LOCKERS**	
105113.1	Staff lockers shall be metal with 16 gauge shelf and sides. Vented door and lockable with padlock that will accept Best core.	
105113.2	Client lockers shall be built in 18 x 18 cubbies with programmable lock such as Digilock or approved equal as approved by Metro General Services. There shall be power outlet in back wall of each locker for charging of personal devices [at student cubbies in a library and cubbies indicated by user in a Community Center] .	
105113.3	Verify Numbering Scheme at Lockers with Metro Project Manager.	
107500.	**FLAGPOLES**	**K**
107500.1	Design-Builder to provide three (3) flag poles and provide associated flags (American, Metro, Service). Verify the configuration with Metro - straight line or curved configuration.	
107500.2	Style: Round Tapered Aluminum	
107500.3	Clam cleat internal lanyard using a polypropylene rope	
107500.4	No winch	
107500.5	Ground set	
107500.6	Exposed Height: 30 feet for American Flag, 25 feet for Metro and Service flags	
107500.7	Base Diameter: 6 inches	
107500.8	Wall Thickness: .188 inch	
107500.9	Finish: Anodized, clear or light bronze	
107500.10	Shoe base/Collar: manufacturer's standard spun aluminum flash collar to match flagpole	
107500.11	US Flag: 5 x 8 feet nylon	

Division 10	SPECIALTIES	Attachment
107500.12	Lighting: 20 watt double LED flagpole down light – Eagle Mountain CHFLKTDLED20 or equal as approved by Metro General Services.	
107500.13	Manufacturers to be the following or equal as approved by Metro General Services: American Flagpole; Eagle Mountain Flag & Flagpole Co., Morgan-Francis Flagpoles & Accessories.	
107500.14	Provide Barrel Lock in lieu of Tumbler Key Cores	
107500.15	Installation Instructions:	
107500.15.1	Dig foundation hole four to six times the butt diameter of the flagpole.	
107500.15.2	Set the foundation tube so that the top of the foundation tube is two inches above grade.	
107500.15.3	Plumb foundation tube and brace so that it will not move during the pouring of the concrete.	
107500.15.4	Pour concrete and trowel up even with top of foundation tube. Keep inside of foundation tube dry.	
107500.15.5	Lay pole on sawhorses and unwrap. For sectional poles check both ends for any burrs. If any are found, file them off and wipe the areas clean. Fully grease jamb sleeves. Align the arrows and/or numbers on each section and jamb together. Numbers must be identical for a proper fit.	
107500.15.6	Screw the truck into the top of the pole, using a wrench to assure a tight fit. If cap-style truck is used, be sure set screws are well tightened.	
107500.15.7	Screw ball into truck and tighten ball set screw. Ball should be tightened into truck tightly by turning stem of ball with wrench. Do not tighten by turning ball proper.	
107500.15.8	If flash collar is provided with pole, slide collar on from the bottom of pole to above cleat level and attach cleat with one screw to hold flash collar until after erection of pole. Then remove cleat, slide collar down, and replace cleat. Caulk between the collar and the pole with waterproof sealant (like roofing cement or asphalt sealant).	
107500.15.9	Thread rope through sheave (pulley) of truck and tie the ends together so that the rope will not drop out of the sheave during erection of the pole.	
107500.15.10	Erect pole into foundation tube and center it. Turn so that the cleat(s) holes are in the direction desired.	
107500.15.11	Place wood wedges (supplied by others) between the pole and the foundation tube and plumb pole.	
107500.15.12	Pack dry sand between the pole and foundation tube. Leave two inch void at the top and fill with waterproof sealant to keep water out of the sand.	
107500.15.13	Loop snaps on rope, space properly for flag size being used.	
107500.15.14	For yardarm-type flagpoles, please locate (3) pre-drilled holes approximately 1/3 down from top of pole. Take the 6” x 9” plate and attach at this point. Then attach U-bolts around the yardarm and through the plate; secure nuts and washers, including the (4) small acorn nuts for the ends of the U-bolts.	
107500.15.15	Important: When erecting sectional flagpoles, never place your sling above the joint. Sling must be positioned below the joint, thus eliminating the possibility that the two sections could separate during hoisting.	

Division 11	Equipment	Attachment
110000.	GENERAL: Include complete sections in the specifications for this division of the Work, in addition to notes indicated on drawings. The Design-Build Team is responsible for complete coordination of statements in the specifications and the notes on the drawings.	
110500.	**GENERAL PROVISIONS**	
110500.1	FIXED EQUIPMENT (Contract Equipment) is acquired through one or more of the construction contracts and is funded within the project construction budget.	
110500.2	MOVEABLE EQUIPMENT (Non-Contract Equipment) is acquired by utilizing a fund allocation within the total project funds.	
110500.3	DESIGNS: An Equipment / Furnishings Schedule is attached. The schedule indicates the Design-Builder will provide and/or install the Furniture and Equipment listed. Schedule will contain room numbers, locations, with exact cutsheets. Design-Builder to interpret quanties.	**TBD**
110500.4	The Design-Builder shall provide layouts of both Movable and Fixed Equipment and Furnishings identified in the attached schedule to ascertain function and space usage for the project.	
110500.5	The Design-Builder shall be responsible for all utility fittings and fixtures for Equipment and Furnishings.	
110500.6	CONSTRUCTION COORDINATION: The Design-Builder shall clearly define contractor responsibilities relative to receiving, storage and installing specified equipment. Installation is to include any utility connections required. The Design-Builder is to locate and coordinate all blocking, support and services for installation of all items in this Division.	
111300.	**LOADING DOCK EQUIPMENT**	
111300.1	DESIGNS: All product specifications, accessory items, applications and details are to be reviewed and approved by Metro General Services prior to the final development of the construction Documents.	
111300.1.1	Dock doors shall be at least 9'-0" wide. Pavement slope is a serious concern relative to drainage and to truck bed floor/building floor/canopy relationship. Loading docks shall be at the same elevation as a floor of the building and shall be either 44 inches minimum to 46 inches maximum above the adjacent pavement or shall be provided with a load leveler. Check height requirements with Metro General Services: A different dock height might be required if step van vehicles, only, are used. Loading docks must not be located at or near fresh air intakes for buildings. Unless this is done, the exhaust from idling vehicles will be drawn into buildings and expose inhabitants to toxic airborne contaminants.	
111300.2	BUDGET ALLOCATIONS: All Loading Dock Equipment is considered Fixed Equipment and acquired through one or more of the Construction contracts within the project budget.	
112000.	**KEY BOXES:** Locate Key Box on Plans; Power and Data Required for Access	**A**

Division 11	Equipment	Attachment
112100.	**MAINTENANCE EQUIPMENT**	
112100.1	DESIGNS: All product specifications, accessory items, applications and details are to be reviewed and approved by Metro General Services prior to the final development of the Construction Documents. The Design-Builder shall be alerted to plan for the storage and service needs of all equipment within maintenance rooms.	
112100.2	BUDGET ALLOCATIONS: Fixed maintenance equipment will be acquired through one or more of the Construction contracts within the project budget. Movable service maintenance equipment for a project is acquired by Metro General Services utilizing a fund allocation within the total project funds but independent of the construction budget.	
112123.	**VENDING EQUIPMENT**	
112123.1	DESIGNS: Vending equipment will be provided under separate contracts with a franchisee. All required power, data, plumbing, lighting and planning for these services shall be a part of the Construction Documents. Location and quantity will be included in the Equipment/Furnishing Schedule. Installation travel path consideration shall be given to the equipment size into and out of the building. Cooridnation any necessary door hardware removal required.	
112800.	**OFFICE EQUIPMENT**	
112800.1	DESIGNS: Office equipment will be provided under separate contracts with a franchisee. All required power, data, plumbing, lighting and planning for these services shall be a part of the Construction Documents.	
113000.	**APPLIANCES**	
113000.1	Coffee and Break Room Appliances and Accessories: See chart for standard products as well as installation (OFCI, CFCI)	**G**
113000.2	No Freezers in Refrigerators	
113000.3	Ice Makers are to be separate appliances	
114000.	**COMMERCIAL APPLIANCES**	
114000.1	DESIGNS: Cooking appliances, kitchen exhaust ventilation, refrigeration appliances, cleaning appliances and all blocking, infrastructure, in-wall connections and structural support shall be included in the Construction Documents.	
114000.2	CONSTRUCTION COORDINATION: Rough layouts, showing the placement of all accessories and appliances, must be submitted with the schematic and design development submittals.	
115100.	**LIBRARY EQUIPMENT**	
115100.1	BOOK DROPS/IN-WALL RETURN SYSTEMS	
115100.1.1	DESIGNS: All product specifications, accessory items, colors, finishes, applications and details are to be reviewed and approved by Metro General Services prior to the final development of construction documents.	
115100.1.2	BUDGET ALLOCATIONS: Shall be considered Fixed Equipment and are funded within the Construction Budget.	

Division 11	Equipment	Attachment
115200.	**AUDIO-VISUAL EQUIPMENT**	
115200.1	DESIGNS: The Design-Builder shall provide an Audio Visual Consultant. Audio-Visual equipment is considered Technology. Both Fixed and Movable Technology design and specifications shall be reviewed and approved by Metro General Services. Design and installation of all audio visual equipment shall be provided by one (1) company. The timing for technology design must coincide with the development of construction documents Design and Construction Documents and prior to bidding. The Design-Builder must be involved in the development of the technology design and be responsible for the coordination of equipment locations, required blocking and other construction needs, required power, data and Design-Builder services to this equipment.	
	BUDGET ALLOCATIONS: Audio-Visual Equipment shall be considered Fixed Equipment or Movable Equipment and included in the Construction budget.	
	FIXED EQUIPMENT: Examples of Fixed Audio-Visual Equipment are motorized projection screens, speakers, equipment racks and projectors which need to be provided and installed by a General Contractor.	
	MOVABLE EQUIPMENT: Examples of Movable Equipment are projectors and podiums.	
	CONSTRUCTION COORDINATION: The Design-Builder is to coordinate all required power and services leading to Fixed and Movable Audio-visual locations on the Construction Drawings. Provide detailed riser diagrams and special attention to ceiling mounted projectors locations, equipment rack locations, and podium locations.	
115213.	**PROJECTION SCREENS**	
115213.1	DESIGNS: The Design-Builder shall include projection screens as part of the AV package.	
115213.2	MOTORIZED AND RECESSED SCREENS: All motorized and recessed ceiling screens will be considered Fixed Equipment and provided as part of the Construction Documents.	
115213.3	WALL MOUNTED PROJECTION SCREENS: Conference room projection screens will be considered Fixed Equipment and provided as part of the Construction Documents.	
116600.	**ATHLETIC EQUIPMENT**	
116600.1	DESIGNS: Athletic equipment and all blocking, infrastructure, in-wall connections and structural support shall be included in the Construction Documents.	
	CONSTRUCTION COORDINATION: A list of Metro furnished items will be submitted to the Designer/Builder for appropriate Construction Document coordination of blocking or placement. Rough layouts, showing the placement of all accessories, must be submitted with the schematic and design development submittals.	

Division 12	Furnishings	Attachment
120000.	GENERAL: Include complete sections in the specifications for this division of the Work, in addition to notes indicated on drawings. The Design-Build Team is responsible for complete coordination of statements in the specifications and the notes on the drawings.	
120500.	**GENERAL PROVISIONS**	
120500.1	FIXED EQUIPMENT (Contract Equipment) is acquired through one or more of the construction contracts and is funded within the project construction budget.	
120500.2	MOVEABLE EQUIPMENT (Non-Contract Equipment) is acquired by utilizing a fund allocation within the total project funds.	
120500.3	DESIGNS: An Equipment / Furnishings Schedule is attached. The schedule indicates the Design-Builder will provide and/or install the Furniture and Equipment listed.	**TBD**
120500.4	The Design-Builder shall provide layouts of both Movable and Fixed Equipment and Furnishings identified in the attached schedule to ascertain function and space usage for the project.	
120500.5	The Design-Builder shall be responsible for all utility fittings and fixtures for Equipment and Furnishings.	
120500.6	CONSTRUCTION COORDINATION: The Design-Builder shall clearly define contractor responsibilities relative to receiving, storage and installing specified equipment. Installation is to include any utility connections required. The Design-Builder is to locate and coordinate all blocking, support and services for installation of all items in this Division.	
121000.	**ART**	
121000.1	The Design-Builder shall be aware of and make provisions for (space, applicable blocking, utilities and lighting) in the building for the installation of interior art.	
121000.2	Device free walls shall be indicated on the interior design plans for locating exhibit tack and white boards, display cabinets, etc. This lay-out needs to be coordinated with fire alarm hors, thermostats,	
122000.	**WINDOW TREATMENTS**	
122000.1	DESIGNS: The Design-Builder shall provide solar shading treatment to all windows. All window treatment, interior and exterior, is integral to the energy management of the building, the control of light and comfort of the occupants. All proposed manufacturer products and hardware must be rated for extra heavy duty commercial use.	
122000.2	MechoShade Systems Required OR Metro Approved Equal.	
122000.3	General Window treatments for the facility should be manual solar shades, MechoShade or Equal as approved by Metro General Services with chain guides.	
122000.4	Black-out window treatments should be provided in areas with projection equipment and other areas specified by Metro General Services as requiring light control with full side and base channels in addition to chain guides.	
122000.5	APPROVALS: All product specifications, accessory items, colors, finishes, applications and details are to be reviewed and approved by Metro General Services prior to the final development of the Construction Documents.	

Division 12	Furnishings	Attachment
122000.6	BUDGET ALLOCATIONS: Window treatments shall be considered Fixed equipment and funded with the Construction Budget.	
122000.7	CONSTRUCTION COORDINATION: The building design and construction documents must include all structural requirements, blocking, services and construction coordination for the installation of window treatment.	
123000.	**CASEWORK**	
123000.1	DESIGNS: All product specifications, accessory items, colors, finishes, applications and details are to be reviewed and approved by Metro General Services prior to the final development of the constructions documents. The Design-Builder shall specify all utility fittings and fixtures for Casework equal to that specified for the Plumbing, HVAC, Electrical and Data Communications.	
123000.2	BUDGET ALLOCATIONS: Casework shall be considered Fixed Equipment and funded within the Construction Budget.	
123000.3	See Division 06 for general casework construction criteria, including locations to have Solid Surface Counters	
124800.	**ENTRANCE FLOOR MATS AND FRAMES**	
124800.1	DESIGNS: At all entrance doors to buildings, including staff entry, entrance floor mats shall be carpet tile, criteria in Division 09.	
124800.2	CONSTRUCTION COORDINATION: Necessary floor preparations for Entrance Floor Mats and Frames shall be included.	

Division No.	Description and Requirements	Attachment
	SEE ADDITIONAL GUIDE SPECIFICATIONS FOR EACH DIVISION	
140000.	**Elevators:** Refer to Metro Guideline Specifications for this section for conveyance of intent. GENERAL: Include complete sections in the specifications for this division of the Work, in addition to notes indicated on drawings. The Design Team is responsible for complete coordination of statements in the specifications and the notes on the drawings.	
140000.1	Note: Metro has an on-going Service Contract with Otis Elevators	
270000.	**IT/AV MISC REQUIREMENTS:** Refer to Metro Guideline Specifications for this section for conveyance of intent. GENERAL: Include complete sections in the specifications for this division of the Work, in addition to notes indicated on drawings. The Design Team is responsible for complete coordination of statements in the specifications and the notes on the drawings.	
270000.1	Architect to provide Specification for AV Equipment unless otherwise notified by Metro (i.e. Library has AV Consultant)	
270000.2	BUILDER is to coordinate installation of Electrical and Data Conduit with AV Vendor.	
270000.3	**LAMINATED CARD**	
270000.3.1	Audio Visual: Provide Printed and Laminated User Instruction Cards for each type of operation; adequate number of copies for each set-up	
270000.4	Low Voltage cost will be an allowance in the GC contract. ITS will budget low voltage separate from equipment.	
270000.5	Include conduit from the ITS closet to the roof for radio buster. Conduit should be capped at roof.	
270000.6	Police Stations Only: Community Rooms must be on a generator	
270000.7	Police Stations Only: Community Rooms must have a minimum of 20 network drops.	
280000.	**Security Standards:** Refer to Metro Guideline Specifications for this section for conveyance of intent. GENERAL: Include complete sections in the specifications for this division of the Work, in addition to notes indicated on drawings. The Design Team is responsible for complete coordination of statements in the specifications and the notes on the drawings.	
280000.1	Security Equipment Standards: JCI & Lenel (milestone software)	

SECTION 14 24 00 - HYDRAULIC ELEVATORS

PART 1 GENERAL

1.01 SUMMARY

A. Section includes: Hydraulic passenger elevators as shown and specified. Elevator work includes:
   1. Standard pre-engineered hydraulic passenger elevators.
   2. Elevator car enclosures, hoistway entrances and signal equipment.
   3. Jack(s).
   4. Operation and control systems.
   5. Accessibility provisions for physically disabled persons.
   6. Equipment, machines, controls, systems and devices as required for safely operating the specified elevators at their rated speed and capacity.
   7. Materials and accessories as required to complete the elevator installation.

B. Related Sections:
   1. Division 3 Concrete: Installing inserts, sleeves and anchors in concrete.
   2. Division 4 Masonry: Installing inserts, sleeves and anchors in masonry.
   3. Division 5 Metals:
      a. Providing hoist beams, pit ladders, steel framing, auxiliary support steel and divider beams for supporting guide-rail brackets.
      b. Providing steel angle sill supports and grouting hoistway entrance sills and frames.
   4. Division 9 Finishes: Providing elevator car finish flooring and field painting unfinished and shop primed ferrous materials.
   5. Division 22 Plumbing:
      a. Sump pit and oil interceptor.
   6. Division 23: Heating, Ventilation and Air Conditioning
      a. Heating and ventilating hoistways and machine rooms.
   7. Division 26 Electrical:
      a. Providing electrical service to elevators, including fused disconnect switches.
      b. Emergency power supply, transfer switch and auxiliary contacts.
      c. Heat and smoke sensing devices.
      d. Convenience outlets and illumination in machine room, hoistway and pit.

C. Work Not Included: General contractor shall provide the following in accordance with the requirements of the Model Building Code and ANSI A17.1 Code. For specific rules, refer to ANSI A17.1, Section 300 for hydraulic elevators. State or local requirements must be used if more stringent.

   1. Elevator hoist beam to be provided at top of elevator shaft. Beam must be able to accommodate proper loads and clearances for elevator installation and operation.
   2. Supply in ample time for installation by other trades, inserts, anchors, bearing plates, brackets, supports and bracing including all setting templates and diagrams for placement.
   3. Hatch walls require a minimum two hours of fire rating. Hoistway should be clear and plumb with variations not to exceed 1/2" at any point.
   4. Elevator hoistways shall have barricades, as required.
   5. Install bevel guards at 75° on all recesses, projections or setbacks over 2" (4" for A17.1 2000 areas) except for loading or unloading.
   6. Provide rail bracket supports at pit, each floor and roof. For guide rail bracket supports, provide divider beams between hoistway at each floor and roof.
   7. Pit floor shall be level and free of debris. Reinforce dry pit to sustain normal vertical forces from rails and buffers.

8. Where pit access is by means of the lowest hoistway entrance, a vertical ladder of non-combustible material extending 42" minimum, (48" minimum for A17.1-2000 areas) shall be provided at the same height, above sill of access door or handgrips.
9. Machine room to be enclosed and protected.
10. Machine Room temperature must be maintained between 55º and 90º F.
11. If machine room is remote from the elevator hoistway, clear access must be available above the ceiling or metal/concrete raceways in floor for oil line and wiring duct from machine room.
12. Access to the machinery space and machine room must be in accordance with the governing authority or code.
13. Provide an 8” x 16” cutout through machine room wall, for oil line and wiring duct, coordinated with elevator contractor at the building site.
14. All wire and conduit should run remote from either the hoistways or the machine room.
15. When heat, smoke or combustion sensing devices are required, connect to elevator machine room terminals. Contacts on the sensors should be sided for 120 volt D.C.
16. Install and furnish finished flooring in elevator cab.
17. Finished floors and entrance walls are not to be constructed until after sills and door frames are in place. Consult elevator contractor for rough opening size. The general contractor shall supply the drywall framing so that the wall fire resistance rating is maintained, when drywall construction is used.
18. Where sheet rock or drywall construction is used for front walls, it shall be of sufficient strength to maintain the doors in true lateral alignment. Drywall contractor to coordinate with elevator contractor.
19. Before erection of rough walls and doors; erect hoistway sills, headers, and frames. After rough walls are finished; erect fascias and toe guards. Set sill level and slightly above finished floor at landings.
20. To maintain legal fire rating (masonry construction), door frames are to be anchored to walls and properly grouted in place.
21. The elevator wall shall interface with the hoistway entrance assembly and be in strict compliance with the elevator contractor's requirements.
22. General Contractor shall fill and grout around entrances, as required.
23. Elevator sill supports shall be provided at each opening.
24. All walls and sill supports must be plumb where openings occur.
25. For applications with jack hole, free and clear access to the elevator pit area for the jack hole-drilling rig is required.
26. Where jack hole is required, remove all spoils from jack hole drilling.
27. When not provided by Elevator Contractor, jack hole shall accommodate the jack unit. If required the jack hole is to be provided in strict accordance with the elevator contractor's shop drawings.
28. Locate a light fixture and convenience outlet in pit with switch located adjacent to the access door.
29. A light switch and fused disconnect switch for each elevator should be located inside the machine room adjacent to the door, where practical, per the National Electrical Code (NFPA No. 70).
30. As indicated by elevator contractor, provide a light outlet for each elevator, in center of hoistway (or in the machine room).
31. For signal systems and power operated door: provide ground and branch wiring circuits, including main line switch. For car light and fan: provide a feeder and branch wiring circuits, including main line switch.
32. Wall thickness may increase when fixtures are mounted in drywall. These requirements must be coordinated between the general contractor and the elevator contractor.
33. Provide supports, patching and recesses to accommodate hall button boxes, signal fixtures, etc..
34. Locate telephone and convenience outlet on control panel.

1.02 SUBMITTALS

A. Product data: When requested, the elevator contractor will provide standard cab, entrance and signal fixture data to describe product for approval.

B. Shop drawings:
   1. Show equipment arrangement in the machine room/control space, pit and hoistway. Provide plans, elevations, sections and details of assembly, erection, anchorage, and equipment location.
   2. Indicate elevator system capacities, sizes, performances, safety features, finishes and other pertinent information.
   3. Show floors served, travel distances, maximum loads imposed on the building structure at points of support and all similar considerations of the elevator work.
   4. Indicate electrical power requirements and branch circuit protection device recommendations.

C. Powder Coat Paint selection: Submit manufacturer's standard selection charts for exposed finishes and materials.

D. Plastic laminate selection: Submit manufacturer's standard selection charts for exposed finishes and materials.

E. Metal Finishes: Upon request, standard metal samples provided.

F. Operation and maintenance data. Include the following:
   1. Owners Manual and Wiring Diagrams.
   2. Parts list, with recommended parts inventory.

1.03 QUALITY ASSURANCE

A. Manufacturer Qualifications: An approved manufacturer with minimum fifteen years experience in manufacturing, installing, and servicing elevators of the type required for the project.
   1. Must be the manufacturer of the power unit, controller, signal fixtures, door operators cab, entrances, and all other major parts of the elevator operating equipment.
      a. The major parts of the elevator equipment shall be manufactured in the United States, and not be an assembled system.
   2. The manufacturer shall have a documented, on-going quality assurance program.
   3. ISO-9001:2000 Manufacturer Certified
   4. ISO-14001:2004 Environmental Management System Certified

B. Installer Qualifications: The manufacturer or an authorized agent of the manufacturer with not less than fifteen years of satisfactory experience installing elevators equal in character and performance to the project elevators.

C. Regulatory Requirements:
   1. ASME/ANSI A17.1 Safety Code for Elevators and Escalators, latest edition or as required by the local building code.
   2. Building Code: National.
   3. NFPA 70 National Electrical Code.
   4. NFPA 80 Fire Doors and Windows.
   5. Americans with Disabilities Act Accessibility Guidelines (ADAAG).
   6. CAN/CSA C22.1 Canadian Electrical Code.
   7. CAN/CSA B44 Safety Code for Elevators and Escalators.

D. Fire-rated Entrance Assemblies: Opening protective assemblies including frames, hardware, and operation shall comply with ASTM E2074, CAN4-S104 (ULC-S104), UL10(B), and NFPA 80. Provide

entrance assembly units bearing Class B or 1 1/2 hour label by a Nationally Recognized Testing Laboratory (2 hour label in Canada).

E. Inspection and testing: Elevator Installer shall obtain and pay for all required inspections, tests, permits and fees for elevator installation.
   1. Arrange for inspections and make required tests.
   2. Deliver to the Owner upon completion and acceptance of elevator work.

1.04 DELIVERY, STORAGE AND HANDLING

A. Manufacturing will deliver elevator materials, components and equipment and the contractor is responsible to provide secure and safe storage on job site.

1.05 PROJECT CONDITIONS

A. Prohibited Use: Elevators shall not be used for temporary service or for any other purpose during the construction period before Substantial Completion and acceptance by the purchaser unless agreed upon by Elevator Contractor and General Contractor with signed temporary agreement.

B. Provide the hole for the jack unit (if required by the type of jack provided), based on excavation through normal soil or clay which can be removed by manual digging or by standard truck-mounted regular drilling unit. Provide a casing if required to retain the walls of the hole. General contractor shall remove excavation spoils deposited in the elevator pit.
   1. If a physical obstruction or hindrance is encountered below the ground surface, including boulders, rock, gravel, wood, metal, pilings, sand, water, quick sand, caves, public utilities or any other foreign material, obtain written authorization to proceed with excavating using special excavation equipment.
   2. Maintain a daily log of time and material costs involved.
   3. Elevator contractor will be compensated on a time and material basis for additional costs incurred after encountering the physical obstruction or hindrance, including the cost of the special excavation equipment.

1.06 WARRANTY

A. Warranty: Submit elevator manufacturer's standard written warranty agreeing to repair, restore or replace defects in elevator work materials and workmanship not due to ordinary wear and tear or improper use or care for 12 months from date of Substantial Completion.

1.07 MAINTENANCE

A. Furnish maintenance and call back service for a period of 12 months for each elevator from date of Substantial Completion during normal working hours, excluding callbacks. Service shall consist of periodic examination of the equipment, adjustment, lubrication, cleaning, supplies and parts to keep the elevators in proper operation.

   1. Manufacturer shall have a service office and full time service personnel within a 100 mile radius of the project site.

PART 2 PRODUCTS

2.01 MANUFACTURERS

A. Manufacturer: Basis of Design: ThyssenKrupp Elevator

2.02 MATERIALS, GENERAL

A. Colors, patterns, and finishes: As selected by the Architect from manufacturer's standard colors, patterns, and finish charts.

B. Steel:
   1. Shapes and bars: Carbon.
   2. Sheet: Cold-rolled steel sheet, commercial quality, Class 1, matte finish.
   3. Finish: Factory-applied baked enamel.

C. Plastic laminate: Decorative high-pressure type, complying with NEMA LD3, Type GP-50 General Purpose Grade, nominal 0.050" thickness. As selected by the Architect from manufacturer's standard colors, patterns, and finish charts.

D. Carpet: By others.

2.03 HOISTWAY EQUIPMENT

A. Platform: Fabricated frame of formed or structural steel shapes, gusseted and rigidly welded with a wood subfloor. Underside of the platform shall be fireproofed. The car platform shall be designed and fabricated to support one-piece loads weighing up to 25% of the rated capacity.

B. Sling: Steel stiles affixed to a steel crosshead and bolstered with bracing members to remove strain from the car enclosure.

C. Guide Rails: Steel, omega shaped, fastened to the building structure with steel brackets.

D. Guide Shoes: Slide guides shall be mounted on top and bottom of the car.

E. Buffers: Provide substantial buffers in the elevator pit. Mount buffers on a steel template that is fastened to the pit floor or continuous channels fastened to the elevator guide rail or securely anchored to the pit floor. Provide extensions if required by project conditions.

F. Jack: Jack unit shall be of sufficient size to lift the gross load the height specified. Factory test jack to insure adequate strength and freedom from leakage. Brittle material, such as gray cast iron, is prohibited in the jack construction. Provide the following jack type: Twin post holeless telescopic 2-stage. Two jacks piped together, mounted one on each side of the car with each having two telescopic sections designed to extend in a synchronized manner when oil is pumped into the Assembly. Each jack section will be guided from within the casing or the plunger assembly used to house the section. Each plunger shall have a high pressure sealing system which will not allow for seal movement or displacement during the course of operation. Each Jack Assembly shall have a check valve built into the assembly to allow for automatically re-syncing the two plunger sections by moving the jack to its fully contracted position. The jack shall be designed to be mounted on the pit floor or in a recess in the pit floor. Each jack section shall have a bleeder valve to discharge any air trapped in the section.

G. Automatic Self-Leveling: Provide each elevator car with a self-leveling feature to automatically bring the car to the landings and correct for overtravel or undertravel. Self-leveling shall, within its zone, be automatic and independent of the operating device. The car shall be maintained approximately level with the landing irrespective of its load.

H. Wiring, Piping, and Oil: Provide all necessary hoistway wiring in accordance with the National Electrical Code. All necessary code compliant pipe and fittings shall be provided to connect the power unit to the jack unit. Provide proper grade oil as specified by the manufacturer of the power unit.

2.04 POWER UNIT

A. Power Unit (Oil Pumping and Control Mechanism): A self-contained unit consisting of the following items:
   1. Oil reservoir with tank cover.
   2. An oil hydraulic pump.
   3. An electric motor.
   4. Oil control valve with the following components built into single housing; high pressure relief valve, check valve, automatic unloading up start valve, lowering and leveling valve, and electro-magnetic controlling solenoids.

B. Pump: Positive displacement type pump specifically manufactured for oil-hydraulic elevator service. Pump shall be designed for steady discharge with minimum pulsation to give smooth and quiet operation. Output of pump shall not vary more than 10 percent between no load and full load on the elevator car.

C. Motor: Standard manufacture motor specifically designed for oil-hydraulic elevator service. Duty rating shall be selected for specified speed and load.

D. Control System: Shall be microprocessor based and protected from environmental extremes and excessive vibrations in a NEMA 1 enclosure.

E. Oil Control Unit: The following components shall be built into a single housing. Welded manifolds with separate valves to accomplish each function are not acceptable. Adjustments shall be accessible and be made without removing the assembly from the oil line.
   1. Relief valve shall be externally adjustable and be capable of bypassing the total oil flow without increasing back pressure more than 10 percent above that required to barely open the valve.
   2. Up start and stop valve shall be adjustable and designed to bypass oil flow during start and stop of motor pump assembly. Valve shall close slowly, gradually diverting oil to or from the jack unit, ensuring smooth up starts and up stops.
   3. Check valve shall be designed to close quietly without permitting any perceptible reverse flow.
   4. Lowering valve and leveling valve shall be adjustable for down start speed, lowering speed, leveling speed and stopping speed to ensure smooth "down" starts and stops. The leveling valve shall be designed to level the car to the floor in the direction the car is traveling after slowdown is initiated.

F. Solid State Starting: Provide an electronic starter featuring adjustable starting currents.

2.05 HOISTWAY ENTRANCES

A. Doors and Frames: Provide complete hollow metal type hoistway entrances at each hoistway opening bolted\knock down construction.
   1. Manufacturer's standard entrance design consisting of hangers, doors, hanger supports, hanger covers, fascia plates, sight guards, and necessary hardware.
   2. Main landing door & frame finish: Stainless steel panels, no. 4 brushed finish.
   3. Typical door & frame finish: Stainless steel panels with no. 4 brushed finish.

B. Interlocks: Equip each hoistway entrance with an approved type interlock tested as required by code. Provide door restriction devices as required by code.

C. Door Hanger and Tracks: Provide sheave type two point suspension hangers and tracks for each hoistway horizontal sliding door.
   1. Sheaves: Polyurethane tires with ball bearings properly sealed to retain grease.

2. Hangers: Provide an adjustable device beneath the track to limit the up-thrust of the doors during operation.
3. Tracks: Drawn steel shapes, smooth surface and shaped to conform to the hanger sheaves.

D. Hoistway Sills: Extruded metal, with groove(s) in top surface. Provide mill finish on aluminum.

2.06 CAR ENCLOSURE

A. Car Enclosure – ELEV 1:
1. Walls: Cab type TKLP, durable wood core finished on both sides with high pressure plastic laminate.
2. Canopy: Cold-rolled steel with hinged exit.
3. Ceiling: Downlight type, metal pans with suspended LED downlights.
4. Cab Fronts, Return,Transom, Soffit and Strike: Provide panels faced with brushed stainless steel..
5. Doors: Horizontal sliding car doors reinforced with steel for panel rigidity. Hang doors on sheave with polyurethane tires that roll on a polished steel track and are guided at the bottom by non-metallic sliding guides.
   a. Door Finish: Stainless steel panels: No. 4 brushed finish.
   b. Cab Sills: Extruded aluminum, mill finish.
6. Handrail: Provide 1.5" diameter cylindrical metal on side and rear walls on front opening cars and side walls only on front and rear opening cars. Handrails shall have a stainless steel, no. 4 brushed finish.
7. Ventilation: Provide one speed exhaust fan mounted on the car top.
8. Pad Buttons: By others.
9. Finished Floor: By others.

B. Car Enclosure – ELEV 2:
1. Walls: Cab type TKS, reinforced cold-rolled steel. Walls shall be constructed of stainless steel, no. 4 brushed finish.
2. Canopy: Cold-rolled steel with hinged exit.
3. Ceiling: Downlight type, metal pans with suspended LED downlights.
4. Cab Fronts, Return,Transom, Soffit and Strike: Provide panels faced with brushed stainless steel.
5. Doors: Horizontal sliding car doors reinforced with steel for panel rigidity. Hang doors on sheave type hangers with polyurethane tires that roll on a polished steel track and are guided at the bottom by non-metallic sliding guides.
   a. Door Finish: Stainless steel panels: No. 4 brushed finish.
   b. Cab Sills: Extruded aluminum, mill finish.
6. Handrail: Provide 1.5'' diameter cylindrical metal on side and rear walls on front opening cars and side walls only on front and rear opening cars. Handrails shall have a stainless steel, no. 4 brushed finish.
7. Ventilation: Manufacturer's standard exhaust fan, mounted on the car top.

C. Car Enclosure – ELEV 3:
1. Walls: Cab type TKS, reinforced cold-rolled steel. Walls shall be constructed of stainless steel, no. 4 brushed finish.
2. Canopy: Cold-rolled steel with hinged exit.
3. Ceiling: Downlight type, metal pans with suspended LED downlights.
4. Cab Fronts, Return,Transom, Soffit and Strike: Provide panels faced with brushed stainless steel..
5. Doors: Horizontal sliding car doors reinforced with steel for panel rigidity. Hang doors on sheave with polyurethane tires that roll on a polished steel track and are guided at the bottom by non-metallic sliding guides.
   a. Door Finish: Stainless steel panels: No. 4 brushed finish.
   b. Cab Sills: Extruded aluminum, mill finish.
6. Handrail: Provide 1.5" diameter cylindrical metal on side and rear walls on front opening cars and side walls only on front and rear opening cars. Handrails shall have a stainless steel, no. 4 brushed

finish.

7. Ventilation: Provide one speed exhaust fan mounted on the car top.
8. Pad Buttons: By others.
9. Finished Floor: By others.

D. Car Top Inspection: Provide a car top inspection station with an “Auto-Inspection” switch, an "emergency stop" switch, and constant pressure "up and down" direction and safety buttons to make the normal operating devices inoperative. The station will give the inspector complete control of the elevator. The car top inspection station shall be mounted in the door operator assembly.

2.07 DOOR OPERATION

A. Door Operation: Provide a direct current motor driven heavy duty operator designed to operate the car and hoistway doors simultaneously. Door movements shall be electrically cushioned at both limits of travel and the door operating mechanism shall be arranged for manual operation in event of power failure. Doors shall automatically open when the car arrives at the landing and automatically close after an adjustable time interval or when the car is dispatched to another landing. Closed-loop, microprocessor controlled motor-driven linear door operator, with adjustable torque limits, also acceptable. AC controlled units with oil checks or other deviations are not acceptable.

1. No Un-Necessary Door Operation: The car door shall open only if the car is stopping for a car or hall call, answering a car or hall call at the present position or selected as a dispatch car.
2. Door Open Time Saver: If a car is stopping in response to a car call assignment only (no coincident hall call), the current door hold open time is changed to a shorter field programmable time when the electronic door protection device is activated.
3. Double Door Operation: When a car stops at a landing with concurrent up and down hall calls, no car calls, and no other hall call assignments, the car door opens to answer the hall call in the direction of the car's current travel. If an onward car call is not registered before the door closes to within 6 inches of fully closed, the travel will reverse and the door will reopen to answer the other call.
4. Nudging Operation: The doors shall remain open as long as the electronic detector senses the presence of a passenger or object in the door opening. If door closing is prevented for a field programmable time, a buzzer will sound. When the obstruction is removed, the door will begin to close at reduced speed. If the infra-red door protection system detects a person or object while closing on nudging, the doors will stop and resume closing only after the obstruction has been removed.
5. Limited Door Reversal: If the doors are closing and the infra-red beam(s) is interrupted, the doors will reverse and reopen partially. After the obstruction is cleared, the doors will begin to close.
6. Door Open Watchdog: If the doors are opening, but do not fully open after a field adjustable time, the doors will recycle closed then attempt to open six times to try and correct the fault.
7. Door Close Watchdog: If the doors are closing, but do not fully close after a field adjustable time, the doors will recycle open then attempt to close six times to try and correct the fault.
8. Door Close Assist: When the doors have failed to fully close and are in the recycle mode, the door drive motor shall have increased torque applied to possibly overcome mechanical resistance or differential air pressure and allow the door to close.

B. Door Protection Devices: Provide a door protection system using 150 or more microprocessor controlled infra-red light beams. The beams shall project across the car opening detecting the presence of a passenger or object. If door movement is obstructed, the doors shall immediately reopen.

2.08 CAR OPERATING STATION

A. Car Operating Station, General: The main car control in each car shall contain the devices required

for specific operation mounted in an integral swing return panel requiring no applied faceplate. Swing return shall have a brushed stainless steel finish. The main car operating panel shall be mounted in the return and comply with handicap requirements. Pushbuttons that illuminate using long lasting LED's shall be included for each floor served, and emergency buttons and switches shall be provided per code. All polycarbonate pushbuttons shall be manufactured with Microban® antimicrobial protection. Switches for car light and accessories shall be provided.

B. Emergency Communications System: Integral phone system provided.

C. Auxiliary Operating Panel: Not Required

D. Column Mounted Car Riding Lantern: A car riding lantern shall be installed in the elevator cab and located in the entrance. The lantern, when illuminated, will indicate the intended direction of travel. The lantern will illuminate and a signal will sound when the car arrives at a floor where it will stop. The lantern shall remain illuminated until the door(s) begin to close.

E. Special Equipment: Not Applicable

2.09 CONTROL SYSTEMS

A. Controller: The elevator control system shall be microprocessor based and software oriented. Control of the elevator shall be automatic in operation by means of push buttons in the car numbered to correspond to floors served, for registering car stops, and by "up-down" push buttons at each intermediate landing and "call" push buttons at terminal landings.
B. Automatic Light and Fan shut down: The control system shall evaluate the system activity and automatically turn off the cab lighting and ventilation fan during periods of inactivity. The settings shall be field programmable.
C. Special Operation: Not Applicable

2.10 HALL STATIONS

A. Hall Stations, General: Provide buttons with red-illuminating LED halos to indicate that a call has been registered at that floor for the indicated direction. Provide 1 set of pushbutton risers.
Provide one pushbutton riser with faceplates having a brushed stainless steel finish.
1. Phase 1 firefighter's service key switch, with instructions, shall be incorporated into the hall station at the designated level.
2. All polycarbonate pushbuttons be manufactured with have Microban® antimicrobial protection.

B. Floor Identification Pads: Provide door jamb pads at each floor. Jamb pads shall comply with Americans with Disabilities Act (ADA) requirements.

C. Hall Position Indicator: An electronic dot matrix position indicator shall be provided and mounted for optimum viewing. As the car travels, its position in the hoistway shall be indicated by the illumination of the alphanumeric character corresponding to the landing which the elevator is stopped or passing. When hall lanterns are provided, the position indicator shall be combined with the hall lanterns in the same faceplate. Faceplates shall match hall stations. Provide at all typical landings.

D. Hall lanterns: Not Applicable

E. Special Equipment: Not Applicable

2.11 MISCELLANEOUS ELEVATOR COMPONENTS

A. Oil Hydraulic Silencer: Install an oil hydraulic silencer (muffler device) at the power unit location. The silencer shall contain pulsation absorbing material inserted in a blowout proof housing arranged for inspecting interior parts without removing unit from oil line.

PART 3 EXECUTION

3.01 EXAMINATION

A. Before starting elevator installation, inspect hoistway, hoistway openings, pits and machine rooms/control space, as constructed and verify all critical dimensions, and examine supporting structures and all other conditions under which elevator work is to be installed. Do not proceed with elevator installation until unsatisfactory conditions have been corrected in a manner acceptable to the installer.

B. Installation constitutes acceptance of existing conditions and responsibility for satisfactory performance.

3.02 INSTALLATION

A. Install elevator systems components and coordinate installation of hoistway wall construction.
   1. Work shall be performed by competent elevator installation personnel in accordance with ASME A17.1, manufacturer's installation instructions and approved shop drawings.
   2. Comply with the National Electrical Code for electrical work required during installation.

B. Jack unit excavation (if required by the type of jack provided): Drill or otherwise excavate below elevator pit construction as required to install the jack unit.
   1. Install casing for jack unit.
   2. Provide HDPE jack protection system for all in ground jacks.
   3. Set casing for jack unit assembly plumb, and partially fill with water-settled sand, eliminating voids. Back fill depth shall be sufficient to hold the bottom of the jack in place over time.

C. Coordination: Coordinate elevator work with the work of other trades, for proper time and sequence to avoid construction delays. Use benchmarks, lines, and levels designated by the Contractor, to ensure dimensional coordination of the work.

D. Alignment: Coordinate installation of hoistway entrances with installation of elevator guide rails for accurate alignment of entrances with cars. Where possible, delay final adjustment of sills and doors until car is operable in shaft. Reduce clearances to minimum safe, workable dimensions at each landing.

E. Lubricate operating parts of system where recommended by manufacturer.

3.03 FIELD QUALITY CONTROL

A. Acceptance testing: Upon completion of the elevator installation and before permitting use of elevator, perform acceptance tests as required by A17.1 Code and local authorities having jurisdiction. Perform other tests, if any, as required by governing regulations or agencies.

B. Advise Owner, Contractor, Architect, and governing authorities in advance of dates and times tests are to be performed on the elevator.

3.04 ADJUSTING

A. Make necessary adjustments of operating devices and equipment to ensure elevator operates smoothly and accurately.

3.05 CLEANING

A. Before final acceptance, remove protection from finished surfaces and clean and polish surfaces in accordance with manufacturer's recommendations for type of material and finish provided. Stainless stall shall be cleaned with soap and water and dried with a non-abrasive surface; shall not be cleaned with bleached-based cleansers.

B. At completion of elevator work, remove tools, equipment, and surplus materials from site. Clean equipment rooms and hoistway. Remove trash and debris.

3.06 PROTECTION

A. At time of Substantial Completion of elevator work, or portion thereof, provide suitable protective coverings, barriers, devices, signs, or other such methods or procedures to protect elevator work from damage or deterioration. Maintain protective measures throughout remainder of construction period.

3.07 DEMONSTRATION

A. Instruct Owner's personnel in proper use, operations, and daily maintenance of elevators. Review emergency provisions, including emergency access and procedures to be followed at time of failure in operation and other building emergencies. Train Owner's personnel in normal procedures to be followed in checking for sources of operational failures or malfunctions.

B. Make a final check of each elevator operation, with Owner's personnel present, immediately before date of substantial completion. Determine that control systems and operating devices are functioning properly.

3.08 ELEVATOR SCHEDULE

A. Elevator Qty. 1 – ELEV 1
   1. Elevator Model: AMEE 50
   2. Elevator Type: Passenger, Traction gearless
   3. Rated Capacity: 5000 lbs.
   4. Rated Speed: 110 ft/min.
   5. Operation System: TAC50
   6. Travel: 16'-0"
   7. Landings: 2 total
   8. Openings:
      a. Front: 2
      b. Rear: 0
   9. Clear Car Inside: 5' - 8" wide x 8' - 5" deep
   10. Cab Height: 8'-0" nominal
   11. Hoistway Entrance Size: 4'-6"' wide x 7'-0" high
   12. Door Type: Two Speed
   13. Power Characteristics: 460 volts, 3 Phase, 60 Hz.
   14. Seismic Requirements: Seismic Design Category C
   15. Fixture & Button Style: Signa4 Signal Fixtures with Microban® antimicrobial protection.
   16. Special Operations: None

B. Elevator Qty. 1 – ELEV 2

1. Elevator Model: AMEE 40
2. Rated Capacity: 4000 lbs.
3. Rated Speed: 110 ft./min.
4. Operation System: TAC32
5. Travel: 16'-0"
6. Landings: 2 total
7. Openings:
   a. Front: 2
   b. Rear: 0
8. Clear Car Inside: 7' - 8" wide x 5' - 5" deep
9. Cab Height: 8'-0" nominal
10. Hoistway Entrance Size: 3' - 6" wide x 7'-0" high
11. Door Type: Single Speed
12. Power Characteristics: 460 volts, 3 Phase, 60 Hz.
13. Seismic Requirements: Seismic Design Category C
14. Fixture & Button Style: Signa4 Signal Fixtures with Microban® antimicrobial protection.
15. Special Operations: None

C. Elevator Qty. 1 – ELEV 3

1. Elevator Model: AMEE 50
2. Elevator Type: Service, Traction gearless
3. Rated Capacity: 5000 lbs.
4. Rated Speed: 110 ft/min.
5. Operation System: TAC50
6. Travel: 16'-0"
7. Landings: 3 total
8. Openings:
   a. Front: 2
   b. Rear: 1
9. Clear Car Inside:
10. Cab Height: 8'-0" nominal
11. Hoistway Entrance Size: 4'-6"' wide x 7'-0" high
12. Door Type: Two Speed
13. Power Characteristics: 460 volts, 3 Phase, 60 Hz.
14. Seismic Requirements: Seismic Design Category C
15. Fixture & Button Style: Signa4 Signal Fixtures with Microban® antimicrobial protection.
16. Special Operations: None

END OF SECTION

Division 21	Fire Suppression	Attachment
210000.	GENERAL: Include complete sections in the specifications for this division of the Work, in addition to notes indicated on drawings. The Design-Build Team is responsible for complete coordination of statements in the specifications and the notes on the drawings.	
210000.1	The contractor designing and installing the fire protection system shall be licensed and certified by the State of Tennessee to perform work on fire protection systems.	
210000.2	All actual devices for low suction pressure, fire pump interruption, tamper switches, and pump room flow switches shall be wired into the main fire alarm panel as distinct zone annunciation. Specify and show which devices are to be furnished by the Electrical contractor, installed by the Fire Protection contractor, and wired by the Electrical contractor.	
210000.3	All pressure switches, pumps, valves and similar devices shall be installed with isolating valves to facilitate replacement of devices. All pumps, valves and similar devices shall be painted red. All piping shall be painted red or permanently banded red.	
210000.4	System shall include back flow protection on the domestic water line as required to be consistent with the requirements of the local water department. [Water Services Requirement]	
210000.5	INSPECTOR TEST VALVES: Test valves shall be as remote as possible for each zone, have piped-in drainage to allow for testing without the use of hoses or special adapters, be located in stairwells or some common, easily accessible location and contain a sight glass for visual inspection of the flow. Each sprinkler zone shall include one drain and one test station. The locations shall be coordinated with and Metro General Services.	
210000.6	**NFPA STANDARDS**	
210000.6.1	Installation must comply with NFPA. Whenever referring to materials and installations by National Fire Protection Association Pamphlets use only the current edition and include the date of each referenced publication in the specifications.	
210000.6.2	The fire suppression system throughout the facility should be evaluated to ensure the system shall be 100% coverage and meet NFPA standards. This includes but is not limited to new underground services, a fire pump if needed, and hydraulic calculations.	
210000.7	Fire Alarm Point, must have ID listing	
210500.	**COMMON WORK RESULTS FOR FIRE SUPPRESSION**	
210500.1	**FIRE SUPPRESSION DEMOLITION** [When Restoration or Repair is Required]	
210500.1.1	Disconnect, demolish, and remove fire-suppression systems, equipment and components indicated to be removed.	
210500.1.2	If pipe, insulation, or equipment to remain is damaged in appearance or is unserviceable, remove damaged or unserviceable portion and replace with new products of equal capacity and quality.	
210500.1.3	Removed piping, and/or equipment, should be capped and/or plugged with same or compatible material and/or equipment.	

Division 21	Fire Suppression	Attachment
211000.	**WATER-BASED FIRE-SUPPRESSION SYSTEMS**	
211000.1	At the start of design, the Design-Builder remains responsible to perform a flow test and pressure test; to be performed by a service agency licensed and certified by the AHJ to perform such tests. Provide a copy of the flow and pressure test to Metro General Services.	
211000.2	Sprinkler Systems shall be automatic systems.	
211100.	**FACILITY FIRE-SUPPRESSION WATER-SERVICE PIPING**	
211100.1	INSPECTION: Backfilling will not be permitted until hydrant drain holes are plugged and Metro General Services and Metro Fire Marshal has inspected the installation and found it acceptable.	
211100.2	**FIRE HYDRANTS**	
211100.2.1	Installation and locations of fire hydrants must conform to NFPA Pamphlet 24, OUTSIDE PROTECTION, and specifications and governing authorities having jurisdiction.	
211100.2.2	Provide Davidson County threads.	
211100.2.3	Locate one hydrant near the exterior siamese pumper connection.	
211100.2.4	Hydrant features must include the following: - 4-1/2" or 5-1/4" minimum valve opening; - 5 foot bury depth; - 150 psi working pressure and hydrostatic tested to 300 psi; - Easy repair without special tools; - Parts interchangeable with other hydrants; - Rotation of standpipe without digging to enable up to 360° nozzle direction change; - 4" or 6" mechanical joint, flanged, ring-tight inlet connection; - Rising stem valve with square operating nut turning clockwise to open; - 4" pumper nozzle; - Plugged drain holes to retain water in the standpipe after use;	
211100.2.5	MANUFACTURERS: Fire Hydrants shall be Clow-Eddy (Break-Flange Model F-2640), manufactured by the Valve Division of the Clow Corporation, Oskaloosa, Iowa 52577.	
211200.	**FIRE-SUPPRESSION STANDPIPES**	
211200.1	Standpipes to comply with the following: - International Building Code; - The Authority Having Jurisdiction (AHJ); - The local Fire Chief; - The State Fire Marshal; - The requirements of the NFPA Pamphlet 14, STANDARD FOR INSTALLATION OF STANDPIPE AND HOSE SYSTEMS	
211200.2	Wherever standpipes are installed, siamese pumper connections shall be provided.	

Division 21	Fire Suppression	Attachment
211300.	**FIRE-SUPPRESSION SPRINKLER SYSTEMS**	
211300.1	Sprinkler Systems shall be designed, installed, and tested according to the following: - International Building code; - The Authority Having Jurisdiction (AHJ); - The local Fire Chief; - The State Fire Marshal; - The requirements of the NFPA Pamphlet 13, STANDARD FOR INSTALLATION OF SPRINKLER SYSTEMS	
211300.2	Special Installations suppression systems for Electrical Equipment rooms, Elevator Equipment rooms, Computer equipment rooms, or similar spaces shall be designed so as not to present a hazard to occupants or equipment. Alternate fire protection systems permitted for these rooms are: Foam, NFPA 11; Carbon Dioxide, NFPA 12; Water Spray, NFPA 15; Dry Chemical, NFPA 17; Dry Sprinkler System - Sprinkler Heads in IT Closets, if included, must have a protective cage	
211300.3	**DRY SPRINKLER SYSTEMS**	
211300.3.1	Provide a low pressure switch on all systems to detect a gradual loss of air pressure. Connect switch to fire alarm system as a distinct zone. Air Compressor shall be on a dedicated electrical circuit. Provide an air compressor approved by Metro General Services. Acceptable manufacturers include: Atlas Copco; Ingersoll Rand; Quincy; SpeedAire	
211300.3.2	MANUFACTURERS: Acceptable manufacturers include Atlas Copco, Ingersoll Rand, Quincy, and SpeedAire	
213000.	**FIRE PUMPS**	
213000.1	Installation shall comply with the International Building Codes and NFPA 20, STANDARD FOR THE INSTALLATION OF CENTRIFUGAL FIRE PUMPS.	
213000.2	Centrifugal type pumps shall be provided. Turbine vane pumps are prohibited.	
213000.3	TESTING OF FIRE PUMPS	
213000.3.1	The contractor and the pump manufacturer should perform a demonstration test of the system in the presence of designated Metro General Service personnel, and the Fire Marshal.	
213000.3.2	Scheduling and other arrangements for the demonstration shall be made through Metro General Services.	

Division 22	Plumbing	Attachment
220000.	GENERAL: Include complete sections in the specifications for this division of the Work, in addition to notes indicated on drawings. The Design-Build Team is responsible for complete coordination of statements in the specifications and the notes on the drawings.	
220000.1	**GENERAL REQUIREMENTS**	
220000.1.1	INSPECTION CERTIFICATE: Work shall be inspected by a Nashville Plumbing Inspector and a copy of the final inspection certificate shall be delivered to Metro General Services. Submit reports of all tests required by local codes.	
220000.1.2	The availability of utilities, details of voltages (for any electronic equipment), pressures, volumes, elevations available, and other details of any services, including water, gas, sewer, storm drainage, etc., shall be determined by the design engineer at the outset of the project. Coordinate with the project's Civil Engineer for the building/site piping interface, 5 feet outside building line.	
220000.1.3	The plumbing system for the building shall incorporate the fixtures and piping requirements for the needs of the facility. This includes but is not limited to the equipment shown in the design criteria package as well as other requirements per the governing authorities. The system should be adequate for the function of the public, ADA, and employees of this building. All plumbing fixtures/equipment with connected water, gas or steam piping shall have service and/or isolation valves for maintenance purposes.	
220000.1.4	Bullhead connections are expressly prohibited on hot water piping lines; Acceptable on air, gas or cold water lines.	
220000.1.6	IRRIGATION: Water used in landscaping shall be reduced through the use of intelligent irrigation system [controlling devices] in combination with drought-tolerant native plantings. Automatic sprinkler systems will incorporate a rain gauge.	
220000.1.7	VIBRATION AND SEISMIC CONTROL: Design as Mandated by the State. Design for sound emission and vibration transmission controls shall meet seismic federal standards. Shock absorbers shall be provided in accordance with the current Plumbing Code. Shock absorbers shall have stainless steel air chamber and brass, bronze, or stainless steel body.	
220000.1.7.1	Provisions for expansion and movement in piping shall be shown on the drawings.	
220000.1.7.2	Branch connections to hot water risers shall be designed with adequate provision for movement.	
220000.1.8	WARRANTY: Equipment warranty periods shall not be less than 36 months from start-up, including boilers. Substantial Completion Date as defined in the contract establishes dates of warranty periods on equipment. Define the source of such warranties (whether by the manufacturer, supplier, and/or contractor), phone numbers, and contact persons to activate warranty issues.	
221000.	**PLUMBING PIPING**	
221000.1	Water, sewer, drain, steam, condensate and gas lines shall not be designed for installation over electrical switchgear and transformers, IT rooms, or in elevator or electrical equipment rooms and shafts. This is not intended to prohibit sprinklers in electrical equipment rooms.	

Division 22	Plumbing	Attachment
221000.2	Water service lines shall be provided with pressure reducing valves at the incoming piping at the building entrance. Special wall sleeve fittings with soft rubber seals are approved. A swing joint shall be provided on water lines just inside the building, to compensate for pipe movement. Specify that threading of cast iron or ductile iron pipe is prohibited.	
221000.3	Check Valves shall be provided on showers, automatic washers, and other items or equipment equipped with cold and hot water mixers.	
221000.4	PEX tubing and fittings are allowed for to run-outs plumbing fixtures. The design engineer shall verify the applicability of PEX with Metro project managers during the design development phase.	
221000.5	**UNIONS - Isolation Requirement**	
221000.5.1	Unions shall be provided at the following locations: - Adjacent to and downstream from all valves; - At final connections to all items of equipment; - At connections to all plumbing fixtures; - Unions or flanged connections - where required for construction or assembling purposes.	
221000.5.2	The design shall minimize the use of dielectric unions.	
221000.6	**DOMESTIC HOT WATER**	
221000.6.1	Domestic hot water piping shall be copper and comply with the current Plumbing Code.	
221000.6.2	Domestic hot water systems shall be designed to reasonably assure an expeditious flow of hot water at ALL outlets. Provisions for a recirculating line shall be evaluated as part of Design Development and submitted to Metro for approval.	
221000.7	**PLUMBING PUMPS**	
221000.7.1	When the total facility requirements are minimal and compact (i.e., fixture count of a small residence), or in the case of an isolated and remote minimal requirement in a large facility, the economics of space requirements and recirculating system must be calculated. Calculations to support economics of chosen design shall be submitted to Metro for approval prior to beginning Design Development phase of drawings. For large facilities, a recirculating line shall be provided for all mains, a minimum of 3/4 inch pipe size [1 1/4 inch for toilet flush valves as required by fixture] In-line recirculating pumps shall be located in mechanical spaces and accessible for maintenance personnel to repair and maintain.	
221000.7.2	The basis of design shall include a domestic water booster pump to be provided for buildings above three stories tall.	
221300.	**FACILITY SANITARY SEWERAGE**	
221300.1	The use of fiberglass (PVC) waste piping under slabs or underground is prohibited.	
221300.2	Combined and Separate Systems: Combined storm and sanitary drains within the building structures are prohibited; each shall be run out of the building separately.	

Division 22	Plumbing	Attachment
221400.	**FACILITY STORM DRAINAGE**	
221400.1	ROOF DRAINS: Roof drains shall be cast iron with removable combined beehive strainer and sediment cup. Location and depth of drains shall be carefully coordinated to assure adequate pitch of the drainage area to drain. Roof drains for multistory building or one-story buildings equivalent to at least two stories in height shall be provided with integral expansion joint. Install roof drain flashing per current codes in close coordination with the roofing installation. Flashing shall be placed below the roof insulation, and insulation shall be tapered down to the drain.	
221400.2	OPEN AREA DRAINS: Where drains are subject to clogging with leaves, select drains which will avoid pooling of water.	
221400.3	Where drainage is required at the base of wheelchair ramps and stairs, trench drains shall be used with slotted grating designed per adopted Metro ADA guidelines.	
223000.	**PLUMBING EQUIPMENT**	
223000.1	BAR CODES: Metro requires that each contractor complete the following information for every piece of installed equipment. Coordinate bar code labeling with the Metro PM and General Contractor: Equipment Code, Building Code, Floor Code, Room Code, Description, Equipment Category, Equipment Condition, Install Date, Manufacturer, Model Number, Purchase Date, Purchase Price, Serial Number	
223000.2	Air compressors shall be Atlas Copco, Ingersol Rand, Quincy, or approved equal.	
223300.	**DOMESTIC WATER HEATERS**	
223300.1	The hot water temperature shall be set as low as possible to comply with code. Mixing valves for hand washing shall be set to deliver hot water between 100°F and 110°F [per current ANSI scald range]	
223300.2	High-efficient water heaters shall be specified to comply with current energy code. Domestic water heaters will be provided with a BACnet interface capable of communicating with the building automation system (BAS) to monitor and reset hot water temperature.	
223300.3	The system shall have re-circulating pump for hot water.	
223300.4	Based on the owner's Project Requirements, a solar heating system for domestic hot water may be included.	
224000.	**PLUMBING FIXTURES**	
224000.1	Fixtures shall be designed for high use and should be tamper resistant.	
224000.2	FIXTURES AND APPURTENANCES: Fixtures shall be of standard types and design and shall be selected on the basis of providing low flow rates of water, either by design or by the installation of flow restrictors. Principal fixture consideration should be given to showerheads and faucets.	
224000.3	WATER CLOSETS: Plumbing toilet fixtures shall include water-saving flush-valve units. Water closets shall be elongated design with an open front seat. Flush Valve: (Toto or Approved Equal) Function of self-charging battery is required. Auto-Flush is required.	

Division 22	Plumbing	Attachment
224000.4	URINALS: Siphon jet urinals shall be used except where sound control is a problem. Flush Valve: (Toto or Approved Equal) Function of self-charging battery is required. Auto-Flush is required.	
224000.5	LAVATORIES: All lavatory or public use fixtures shall be specified as automatic shut-off to limit the amount of water wasted. Traps on Lavatories and Sinks shall be not less than 1-1/4 inch by 1-1/2 inch chrome plated cast brass "P" traps with brass nut. Supplies to Lavatory Fittings shall be flexible tube risers with steel handle stops, all chrome plated. Faucet valves shall be Toto, or approved equal, with flow rates specified by the engineer to minimize water consumption. Location of Sensor preferred on Toto Model Auto-Control Faucets. Self-recharging of battery Required. Provide TOTO or Submit Equal for Approval.	
224000.6	Faucets and Flush Values to be from Same Vendor	
224000.7	Janitors' Sinks shall be precast terrazzo or molded stone (24 inch by 36 inch minimum) on the floor.	
224000.8	Break Room / Kitchen Sinks	
224000.8.1	Wrist Blades, Flow Rate of 1.5 gpm, Maximum.	
224000.9	Wall-hung Electric Refrigerated Water Coolers shall be provided in new buildings.	
224000.10	At New Construction Projects; Outdoor Personal Hydration Stations are Required.	**E**
224000.11	Coffee Maker and Ice Maker Hook-Ups.	**C**
224000.12	Mixing valves shall be thermostatic mixing type.	
224000.13	Shower Pans shall be detailed in the drawings and specified. Shall comply with adopted ADA Guidelines.	
224000.14	Provide Bottle Fillers at all water fountains - Architect to specify model.	

Division 23	Heating, Ventilating, and Air Conditioning (HVAC)	Attachment
230000.	GENERAL: Include complete sections in the specifications for this division of the Work, in addition to notes indicated on drawings. The Design-Build Team is responsible for complete coordination of statements in the specifications and the notes on the drawings.	
230000.1	Recommendations based on good engineering practice that exceed the minimum code requirements should be coordinated and approved by the Metro General Services project manager.	
230000.2	Structural elements [Strapping, cabling, etc.] shall be designed according to the seismic classification of the Middle Tennessee area.	
230000.3	When, if required by project program conditions, or in IT, Medical Facilities, or Library humidifier units as additions to all AHU's or part of package unit.	
230000.4	Minimum outside air ventilation requirements shall be designed in accordance with ASHRAE 62.1 [version corresponding to LEED Scorecard or more stringent] . Total supply air ventilation shall clearly denoted on design documents. .	
230000.5	UTILITIES: The availability of utilities, details of voltages, pressures, volumes, elevations available, and other details of any services, including water, gas, sewer, storm drainage, etc., shall be determined by the Design-Builder at the outset of the project. Coordinate with the project's Civil Engineer for the building/site piping interface, 5 feet outside building line.	
230000.6	EQUIPMENT SCREENING: Consideration shall be given to aesthetic issues, such as the appearance, orientation and color of equipment located outside. Coordinate screening of chillers, cooling towers, above ground fuel tanks, and other equipment with Metro General Services. Provide Metro General Services with the cost analysis for screening of rooftop equipment for consideration and direction; Review with Metro General Services at least once before 100% CD Issuance.	
230000.7	It is preferred that exposed piping or mechanical equipment on the roof be minimized as to minimize roof leaks/penetrations. Located in the building is preferred to exposed on roof where possible.	
230000.8	Specify and Install: Hail protection guards are required for all outdoor equipment [AHU, Condensers, Chillers, etc.)	
230000.9	The mechanical systems [for Fire Halls], parts that would need to be shipped with locally available within 28-48 hours, specified with redundant replacement parts to allow continued operation in the event of a component failure (for example, spare compressors). Tag all equipment with Fire Station Number and Location as stored in attic stock.	
230000.10	Equipment efficiencies shall meet or exceed compliance with ASHRAE 90.1 [version corresponding to LEED Scorecard or more stringent] for Climate Zone 4A.	
230000.11	BAR CODES: Metro requires each Design-Builder complete the following information for every piece of installed equipment. Coordinate bar code labeling with the Metro Project Manager and General Contractor: Equipment Code; Building Code; Floor Code; Room Code; Description; Equipment; Category; Equipment Condition; Install Date; Manufacturer; Model Number; Purchase Date; Purchase Price; Serial Number	

Division 23	Heating, Ventilating, and Air Conditioning (HVAC)	Attachment
230000.12	Specific temperature and humidity requirements may be noted for areas requiring special treatment, including the Telecommunications (IT) Room. Relative humidity should be maintained in these spaces to not exceed 60% RH. Temperature not to exceed 80 degrees F. Refer to IT Standards for additional specific IT information.	
230000.13	Supply and/or return/exhaust shall be provided for every room to ensure that air flow through each room is ensured.	
230000.14	Conditions may exist where equipment may be reused when economically feasible. The condition and age of any reused equipment shall be evaluated by the Design-Builder and presented to the Metro General Services project manager for acceptance.	
230000.15	The use of DX condensing units with modular or rooftop air handlers is acceptable for small additions if chilled water capacity is unavailable or if the installation cost for chilled water becomes prohibitive. If utilized, DX equipment shall not be oversized. When DX equipment is used, engineers shall analyze sensible cooling and latent cooling loads at non-peak conditions. DX equipment may require hot gas reheat coils for dehumidification during low cooling load conditions. Systems shall be provided with humidistats. Dedicated outside air units should be considered when outside air volume is greater than or equal to 10% of total air volume.	
230000.16	Chilled water is the preferred cooling medium for new facilities and existing facilities that have chilled water available. The type of chiller (centrifugal, screw or reciprocating compressors, air or water cooled condensers) shall be based on life cycle cost, system flexibility, and capability of the system to meet project design criteria. When adding a chiller to an existing chilled water system, the Design-Builder shall match the chiller selection with the existing chilled water system criteria.	
230000.17	Manufacturers listed in this standard have successfully been installed on Metro projects and are satisfactorily serviced by local representation. Alternate manufacturers should be submitted through the substitution process described in the General Conditions of the contract specifications prior to purchase, and must be approved by the engineer of record and the Metro Project Manager.	
230000.18	WARRANTY: Equipment warranty periods shall not be less than 36 months from start-up, including boilers. Substantial Completion Date as defined in the contract establishes dates of warranty periods on equipment. Define the source of such warranties (whether by the manufacturer, supplier, and/or contractor), phone numbers, and contact persons to activate warranty issues.	
230000.19	**DESIGN CONDITIONS**	
230000.19.1	Use the latest edition of ASHRAE Fundamentals Handbook for climatic conditions for the Nashville Metro area. Deviations from ASHRAE standard design conditions shall be presented to the Metro PM for approval. The following criteria shall be used to set the outdoor design conditions: - Winter Heating = Winter dry bulb (DB) 99.6%; - Summer Cooling = 0.4% Design DB; 0.4% Wet bulb (WB).	

Division 23	Heating, Ventilating, and Air Conditioning (HVAC)	Attachment
230000.19.2	Temperature Set Points in most building spaces will be maintained 68° heating and 72° during cooling with a maintained relative humidity below 60%, without adding specific dehumidification, for human comfort, unless otherwise specified.	
230000.20	**TEST AND BALANCE**	
230000.20.1	Test and balance shall be provided by the Design-Build Team (Include in contract price). Test and balance contractors shall be NEBB or AABC certified, and contracted directly with the General Contractor. AGENT QUALIFICATION: Engage a testing, adjusting, balancing agent certified by AABC or NEBB.	
230000.20.2	Testing, adjusting, and balancing shall include: - Balancing airflow and water flow within distribution systems, including sub-mains, branches, and terminal units, to indicate quantities according to specified tolerances; - Adjusting total HVAC systems to provide indicated quantities; - Measuring electrical performance of HVAC equipment; - Setting quantitative performance of HVAC equipment; - Verifying that automatic control devices are functioning properly; - Reporting results of activities and procedures.	
230000.20.3	PRE-DESIGN TESTING: A pre-design test and balance report for areas subject to renovation will be provided by the Metro General Services and made available to the Design-Builder upon request. The Design-Builder is responsible for developing the scope of the pre-design test and balance services in a timely manner so that test results can be made available to the Design-Builder prior to completion of design development documents. The Metro General Services project manager shall be copied on all test and balance deficiency and final reports.	
230000.21	**NOISE AND VIBRATION CONTROL**	
230000.21.1	Attention shall be paid to noise and vibration control; discuss with project team. 'The following sound and vibration control items shall be considered: - Substantial equipment room walls, i.e., block construction with filled cavities; - Thickening floor slabs under and/or over equipment rooms; Sound treatment of equipment room walls and/or ceiling or the ceiling below; Using discharge air plenums on AHUs where the sound design criteria for adjacent spaces is NC 30-35 or lower; - Lagging the plenum (especially on rooftop units) with drywall or limp mass materials to reduce noise; - Use of more or better vibration isolators; - Relocation of the room or of the critical adjacent space.	

Division 23	Heating, Ventilating, and Air Conditioning (HVAC)	Attachment
230000.22	**ACCEPTABLE SYSTEM TYPES [SEE SPECIFIC SYSTEM SECTIONS FOR MANUFACTURERS]**	
230000.22.1	The systems below are all acceptable for Metro building projects. Select the system that applies to this particular project. 1. SPLIT DX SYSTEMS: Air handler matched with a heat pump or air cooled condenser. Systems to be capable of dehumidification during part load conditions. 2. 4-PIPE BOILER/CHILLER: Chilled water/Hot water pumping system with air cooled chiller and boiler. 3. 4-PIPE BOILER/CHILLER: Chilled water/Hot water pumping system with water cooled chiller, cooling tower, and boiler. 4. WATER SOURCE HEAT PUMP: Air handlers connected to a condenser water loop system utilizing a cooling tower or ground source. 5. PACKAGED GAS OR ELECTRIC DX TYPE UNITS: Systems to be capable of dehumidification during part load conditions. 6. VARIABLE REFRIGERANT SYSTEMS: The system must be capable of providing simultaneous heating and cooling to each zone; for each zone from the branch controller. 7. GEO-THERMAL: Ground-water source heat pump system.	
230000.23	**AREA-SPECIFIC HVAC CRITERIA**	
230000.23.1	The following area-specific HVAC criteria are not all inclusive and do not diminish the role of the Design-Builder Team to provide spaces that are designed in accordance with applicable building codes, NFPA and ASHRAE Guidelines.	
230000.23.2	IT ROOMS: Coordinate locations and services required for IT with the Metro Project Manager. All IT and Telecommunications rooms shall have dedicated DX or mini-split type units and be supplied by generator or UPS power. At no time shall any air-conditioning units, condensate lines, water heaters, or any type of water lines, except fire sprinklers as required by code, be placed above the Telecommunications Room. Areas with heavy equipment load, including any IT rooms, shall have dedicated tem-temperature zoning controls. IT rooms shall be air conditioned to 68°F to 70°F at 50% RH. Hot gas or electric reheat and a space humidistat should be used to engage dehumidification control sequence.	
230000.23.3	LABORATORY: Design laboratory HVAC systems in accordance with NFPA Guidelines and specific user requirements. Do not re-circulate laboratory air to other areas of the facility. Locate exhausts over refrigerators to reduce heat input to the space.	
230000.23.4	DIETARY (COMMERCIAL): Specify “short circuit” style hood. Provide heat in make-up air units in accordance with applicable building codes and NFPA 96. Range hood exhaust ductwork shall comply with NFPA 96. Commercial dishwasher exhaust duct shall be all aluminum with welded joints and shall be pitched to drain to the dishwasher. Hood shall be specified under Division 23 and installed by the GC/Mechanical Subcontractor. Use variable air volume supply & exhaust controlled by occupied/unoccupied switch, time clock, or differential pressure.	

Division 23	Heating, Ventilating, and Air Conditioning (HVAC)	Attachment
230000.23.5	MECHANICAL, ELECTRICAL, TELEPHONE & ELEVATOR EQUIPMENT ROOMS: Electrical switch gear rooms, telephone and communication equipment rooms, and elevator equipment rooms shall be air conditioned to 68°F to 75°F at 50% RH. VAV or dedicated fan coil units (DX) are acceptable. Cooling must be available year round. Cooling of telephone and data rooms shall be on emergency power via split DX system. Equipment rooms shall be designed to allow sufficient space for maintenance of equipment. Minimum headroom for service access aisles shall be 6'-6". Equipment rooms/central plant shall be drawn to ¼" = 1'-0" scale; all equipment rooms shall have a section drawn to show clearances and access spaces around and under equipment, piping, ductwork, etc. Provide NEC required service areas for electrical equipment. Provide sufficient tube and coil pull areas for chiller condensers and evaporators, shell and tube heat exchangers, AHUs, boilers, smoke detector removal area, fire damper and smoke damper access. Provide any code-required or service-required clearances over equipment. Locate chillers and boilers within equipment rooms adjacent to exterior walls with doors of adequate size to allow complete removal of equipment. Temperature and humidity sensitive equipment and controls (variable frequency drives) shall be considered in determining the use of natural ventilation supply air. Design wet bulb temperatures in Nashville should be considered in ventilating equipment rooms using untreated outside air. Equipment rooms shall not be used as AHU return or fresh air plenums. Chiller rooms shall be ventilated, but not mechanically cooled, to comply with ASHRAE Standard 15. Utilities that serve other areas shall not pass through electrical rooms.	
230100.	**OPERATION AND MAINTENANCE OF HVAC SYSTEMS**	
230100.1	All mechanical equipment with connected water or steam piping shall have service and/or isolation valves and gauges for maintenance purposes.	
230100.2	All installed equipment shall be capable of being serviced local technicians. No exceptions.	
230100.3	All mechanical, electrical, plumbing, and life safety components including, but not limited to VAV boxes, fire/smoke dampers, fan coil units, and air filters must be accessible with a standard 8 ft. ladder and must be labeled on the ceiling with permanent labels or markers. In addition, VAV/FCU/VRV filter media shall be incorporated either in drop-in or permanent filter grids installed in ceilings or walls. Filters shall not be mounted above the reach of personnel using an 8 ft. ladder.	
232000.	**HVAC PIPING AND PUMPS**	
232000.1	**PIPING**	
232000.1.1	All piping shall be insulated to meet or exceed thicknesses according to ASHRAE 90.1 for Climate Zone 4A. Ductwork shall be externally insulated. Internally insulated ductwork shall not be used in Metro buildings.	

Division 23	Heating, Ventilating, and Air Conditioning (HVAC)	Attachment
232000.1.2	Piping shall comply with codes. This includes supports, insulation, minimum clearance requirements, inspection requirements, etc.	
232000.1.3	GROOVED PIPING SYSTEMS: For condenser water systems, an engineered system of rolled-grooved piping with couplings and gaskets designed for the application may be used with the approval of Metro General Services. Cut-grooved piping shall be specifically prohibited.	
232000.1.4	Underground geothermal WSHP systems, heat fused HDPE piping and fittings may be used with approval from the Metro General Services project manager.	
232000.1.5	Bullhead connections in any piping service are prohibited. All dielectric unions shall be kept to a minimum and should be installed where they are accessible by technical personnel at or below the reach limit provided from an 8 ft. ladder.	
232000.1.6	Cast iron, brass and ASTM A120 pipe shall not be used on lines with pressures higher than 49 psig or temperatures higher than 292 degrees.	
232000.2	**PUMPS**	
232000.2.1	PUMPS: Metro General Services requires that the final coupling alignment be documented and the results furnished in writing to Metro General Services. Field check all alignments and report the maximum angular and eccentric misalignments to the nearest 0.001 inch.	
232100.	**HYDRONIC PIPING AND PUMPS**	
232100.1	GENERAL PROVISIONS: Metro General Services requires that the final coupling alignment be documented and the results furnished in writing to Metro General Services. Field check all alignments and report the maximum angular and eccentric misalignments to the nearest 0.001 inch. Submit performance curves with shop drawings.	
232100.2	**PUMP DESIGN SELECTION**	
232100.2.1	Select pumps so that the engineer-designed net positive suction head available (NPSHA) at the pump intake will be larger than the(manufacturer-required) net positive suction head required (NPSHR) at the highest possible water temperature at the pump intake.	
232100.2.2	Pump motors shall include built-in, thermal-overload protection and grease-lubricated ball bearings. Motor shall be selected and specified as non-overloading over the entire pump curve shown by the manufacturer.	
232100.2.3	Pump shall be installed with variable frequency drive starters.	
232100.2.4	All pumps shall be installed with line size isolation valves on both sides.	
232100.2.5	All pump motors shall be selected at 1750 RPM.	
232100.2.6	Condensate return pumps shall be limited to no greater than 1800 rpm.	
232100.3	**PUMP TYPES**	
232100.3.1	Base mounted hydronic pumps: For primary pumping application, split case centrifugal pumps are preferred over the end suction pumps.	
232100.3.2	Mechanical seals are preferred and should be used where adaptable. Complete flushing arrangement shall be provided for mechanical seals and packing.	
232100.3.3	Horizontal split case pump ball bearings shall be double row on outboard. Pump casings shall have vent and drain plugs and pressure gauge tapping.	

Division 23	Heating, Ventilating, and Air Conditioning (HVAC)	Attachment
232100.4	**INSTALLATION**	
232100.4.1	Pump and motor shall be installed on a common steel or cast iron base, isolated from the building structure so that the unit will not transmit vibration to the building. Pump coupling to motor shall be flexible. Coupling shall be equipped with a guard.	
232100.4.2	Piping connections to pump shall be flexible and mounted horizontally. Specify that flexible connections be Teflon Flexijoint by Ethylene Corporation or butyl arched spool type expansion joint with tie rods by Uniroyal or approved equal. Provide valved gauges at the pump suction and discharge. Isolation dampers will be used on all piping and pump/motor mounts to prevent premature pipe fatigue.	
232200.	**STEAM AND CONDENSATE PIPING AND PUMPS**	
232200.1	Condensate drip traps above 15 psig shall not be designed to discharge directly into condensate return mains or condensate pump receivers, but shall be designed to discharge into a flash tank (vented into the low pressures side of the system, if possible), and to drip through a low pressure F. & T. trap to a condensate return main or receiver.	
232200.2	Drain, steam, and condensate lines and any wet lines (including pipes, fittings, valves, or other), shall not be installed or designed for installation over electrical switchgear, motor control centers, transformers, nor in elevator shafts and equipment rooms.	
232200.3	Cooling coil condensate drain piping from air handling units: Type "L" hard copper, minimum size 1 inch. Specify that wrought copper fittings with sweat joints of 95-5 solder be used. Trap drain lines and run to suitable drains. Provide cleanouts at traps and in the piping system where pipe changes direction.	
232200.4	ASME compliance: Piping shall comply with ASME “building services piping” and “welding and brazing qualifications. Safety valves and pressure vessels shall comply with ASME boiler and pressure vessel code. Steam piping shall be schedule 40 steel pipe. Pipes 2 inches and smaller shall have threaded joints and pipe larger than 2 inches shall have welded joints. Condensate piping shall be schedule 80 steel pipe with threaded joints.	
232300.	**REFRIGERANT PIPING**	
232300.1	HVAC refrigeration equipment and fire suppression systems will not contain HCFC’s or Halon.	
233100.	**HVAC DUCTS AND CASINGS**	
233100.1	All ductwork shall be installed per SMACNA standards. Accordingly, ductwork shall be sized properly and baffled to prevent unacceptable noise levels in noise sensitive rooms.	
233100.2	Comply with NFPA 90A “Installation of Air Conditioning and Ventilating Systems” and NFPA 90B “Installation of Warm Air Heating and Air Conditioning Systems” unless otherwise noted. Fabricate ducts, elbows, transitions, offsets, branch connections, and other construction with galvanized sheet steel according to SMACNA “HVAC Duct Construction Standards—Metal and Flexible”. Do not specify the use of internal lining or pre-fabricated fiberglass duct-board on supply duct.	
233100.3	All ductwork shall be insulated to meet or exceed thicknesses according to ASHRAE 90.1 for Climate Zone 4A. Ductwork shall be externally insulated. Internally insulated ductwork shall not be used in Metro buildings.	

Division 23	Heating, Ventilating, and Air Conditioning (HVAC)	Attachment
233200.	**AIR PLENUMS AND CHASES**	
233200.1	Ducted returns are preferred over plenum returns in all cases.	
233300.	**AIR DUCT ACCESSORIES**	
233300.1	FIRE AND SMOKE DAMPERS: Specify that, after dampers are installed, the contractor shall operate each damper through all positions to assure free operation. Specify that the contractor must certify in writing that all fire and smoke dampers were checked by operation at installation and that all are in proper position and functional order.	
233300.2	STANDARD VOLUME DAMPERS: Volume dampers shall be multiple or single blade parallel or opposed blade de-sign as indicated, standard leakage rating, with linkage outside airstream, and suitable for horizontal or vertical applications.	
233300.3	VIBRATION AND SEISMIC CONTROLS: Detail fabrication and attachment of isolators, anchors, and restraints. Isolator pads, rubber isolator mounts, or spring isolators shall be used for vibration isolation of mechanical equipment. Seismic snubbers or steel bases shall be designed and fabricated to prevent mechanical equipment from excessive movement during all conditions.	
233700.	**AIR OUTLETS AND INLETS**	
233700.1	Install diffusers, registers, and grilles according to NFPA 90A, “Standard for the Installation of Air-Conditioning and Ventilating Systems.	
233700.2	Supply diffusers shall be located or designed to avoid blowing directly onto work surfaces, seating areas, thermostats, or walls. Do not use the area above ceiling for return air plenums without the prior approval of the Metro Project Manager. The use of return grille filter housings shall be the standard for all drop and hardboard ceilings. At no time shall filters be only accessible via VAV or FCU in above ceiling areas.	
234100.	**PARTICULATE AIR FILTRATION**	
234100.1	Air handling units shall have a minimum of MERV 8 air filtration per ASHRAE 52.2	
235200.	**HEATING BOILERS**	
235200.1	ASME Compliance: Fabricate and label boilers to comply with the ASME boiler and pressure vessel code, section IV, heating boilers. Comply with NFPA 70 for electrical components and installation. Computer-based controller with nonvolatile memory and solid-state sensors providing burner sequencing, flame supervision, system status, faults, and diagnostics.	
235200.2	MANUFACTURERS: Approved manufacturers shall be: Lochinvar, Hurst, Bryan, or approved equal.	
235700.	**HEAT EXCHANGERS FOR HVAC**	
235700.1	Fabricate and label heat exchangers to comply with ASME boiler and pressure vessel code, section VIII, “Pressure Vessel”.	
236400.	**PACKAGED WATER CHILLERS**	

Division 23	Heating, Ventilating, and Air Conditioning (HVAC)	Attachment
236400.1	MANUFACTURERS: Acceptable manufacturers shall be Trane, McQuay, and York or approved equal. Chillers shall comply with ASHRAE 15, ASME boiler and pressure vessel code, UL 465, NFPA70. Manufacturer's standard microprocessor-based chiller controls shall be unit mounted and factory wired with a single point power connection and separate control circuit.	
236500.	**COOLING TOWERS**	
236500.1	ACCEPTABLE MANUFACTURERS: Baltimore Air Coil, Evapco, Marley, or approved equal.	
236500.2	DESCRIPTION: induced-draft, cross flow cooling tower that is factory fabricated and assembled.	
236500.3	CASING: Galvanized steel, complying with ASTM A 653 G210 coating designation.	
236500.4	FILL MATERIAL: PVC; resistant to rot, decay, and biological attack; with maximum flame-spread rating of five according to ASTM E 84; and fabricated, forced, and installed by manufacturer to ensure that water breaks up into droplets.	
237000.	**CENTRAL HVAC EQUIPMENT**	
237000.1	MANUFACTURERS: General AHUs - Trane, McQuay, York, or approved equal. 100% Outdoor Air units - Air handler manufacturers shall be approved by Metro. IT cooling units - Air handlers shall be Liebert, or approved equal. Geothermal heat pump - Climatemaster, Water Furnace or approved equal. BAS System - Automated Logic, Alerton, Trane, Honeywell, JCI, or approved equal.	
237000.2	**MOTORS AND CONTROLLERS**	
237000.2.1	Motors ½ HP and larger shall be poly-phase.	
237000.2.2	Motors smaller than ½ HP shall be single phase.	
237000.2.3	Frequency rating shall be 60 Hz.	
237000.2.4	Voltage rating shall be determined by voltage of circuit to which motor is connected.	
237000.3	**INSTALLATION**	
237000.3.1	Condensate lines from drain pan must have deep traps to prevent either draw or blow through conditions.	
237000.3.2	Access doors on plenums and AHU sections shall be provided with hinges and latching handles.	
237000.4	**CONSTRUCTION**	
237000.4.1	WSHP units shall be of sectionalized construction, consisting of fan section, coil section, and drain pan to catch all condensate. Interior surfaces and hot/cold deck division panel shall be insulated with not less than 1 inch thick fiberglass blanket. The drain pan shall be insulated preferably on the exterior; however, interior insulation, if provided, shall be of a type that will resist mechanical damage and deterioration by water. All condensate drain pans shall be aluminum or stainless steel. Galvanized steel, plastic, or fiberglass pans are not permitted. Units shall include option for UV Lamp package offered by manufacturer.	
237000.4.2	Condensate drain pans shall be aluminum or stainless steel. Galvanized steel, plastic or fiberglass pans are not permitted.	

Division 23	Heating, Ventilating, and Air Conditioning (HVAC)	Attachment
237000.4.3	Fan wheels and housing shall be AMCA Class II construction; except, high velocity systems requiring total fan static pressure over 4 inches shall use Class III fans. Medium and high velocity draw-through and built-up systems shall have duct discharge sections designed per accepted good practices to minimize losses and for velocity energy recovery. Minimum length of transition shall be equivalent to one wheel diameter.	
237000.4.4	Interior surfaces and hot/cold deck division panel shall be insulated with not less than 1 inch thick fiberglass blanket. The drain pan shall be insulated preferably on the exterior; however, interior insulation, if provided, shall be of a type that will resist mechanical damage and deterioration by water. All condensate drain pans shall be aluminum or stainless steel. Galvanized steel, plastic, or fiberglass pans are not permitted.	
237000.4.5	Units shall include option for UV Lamp package offered by manufacturer.	
237400.	**PACKAGED OUTDOOR HVAC EQUIPMENT**	
237400.1	DX units shall be provided with a modulating, digital or VFD controlled scroll compressor on the lead cooling circuit.	
238100.	**DECENTRALIZED HVAC EQUIPMENT**	
238100.1	IT COOLING MANUFACTURERS: Liebert; or approved equal.	
238100.2	VRF UNIT MANUFACTURERS: Mitsubishi, LG, Daikin; or approved equal.	

23 08 00 - COMMISSIONING FOR HVAC

PART 1 - GENERAL

1.01 RELATED DOCUMENTS

A. Drawings and general provisions of the Contract, including General and Supplementary Conditions and Division 01 Specification Sections, apply to this Section.

B. Specifications throughout all Divisions of the Project Manual are directly applicable to this Section, and this Section is directly applicable to them.

1.02 SUMMARY

A. The purpose of this Section is to define Contractor responsibilities in the commissioning process, which are being directed by the Commissioning Authority (CxA) and General Contractor. Other mechanical system testing is required under other Division 23 Specification Sections. ASHRAE Standard 0 – 2005 The Commissioning Process and Standard 1.1 – 2007 Technical Requirements for the Commissioning Process provide additional guidance for the commissioning of mechanical systems.

B. Commissioning requires the participation of the Contractor to ensure that all systems are operating in a manner consistent with the Contract Documents. General Commissioning requirements and coordination are detailed in Division 01. Division 23 shall be familiar with all parts of Division 01 and the Commissioning Plan issued by the Contractor and shall execute all Commissioning responsibilities assigned to them in the Contract Documents and include the cost of Commissioning in the Contract price.

C. The commissioning process does not take away from or reduce the responsibility of the system designers or installing contractors to provide a finished and fully functioning product.

D. Mechanical systems to be commissioned include the following:

1. Building Automation System (and BAS).
2. Chillers and associated Pumps, Cooling Towers, etc.
3. Variable Refrigerant Volume Units
4. Boilers
5. General Supply and Exhaust Fans
6. Domestic Water Heaters
7. Fan Coil Units
8. Terminal Reheat Units
9. Heat Pump Units (indoor and outdoor components)
10. Laboratory Hood Exhaust Fans
11. Laboratory Pressure Systems
12. Dedicated Outside Air Units
13. Custom Air Handling Units

14. Humidifiers

15. Split System A/C Units

16. Packaged Terminal Air Conditioning (PTAC) Units

17. Rooftop Air Conditioning Units

18. Heat Exchangers

1.03 DEFINITIONS

A. Commissioning: A systematic process confirming that building systems have been installed, properly started, and consistently operated in strict accordance with the Contract Documents, that all systems are complete and functioning in accordance with the Contract Documents at Substantial Completion, and that Contractor has provided Owner adequate system documentation and training. Commissioning includes deferred and/or seasonal tests as approved by Owner.

B. Commissioning Authority (CxA): The designated person, company, or entity that plans, schedules, and coordinates the commissioning team to implement to commissioning process. Owner will engage the CxA under a separate contract.

C. Commissioning Plan: Document prepared by Contractor and approved by Owner that provides the structure, schedule, and coordination plan for the Commissioning process from the construction phase through the warranty period. The Commissioning Plan must satisfy the Owner's test requirements.

D. Commissioning Team: Working group made up of representative(s) from the Architect/Engineer (AE), General Contractor (GC), Owner's Test, Adjust, and Balance (TAB) Firm, Building Automation System (BAS) provider, Mechanical Contractor (MC), Electrical Contractor (EC), specialty manufacturers and suppliers, and Owner.

E. Deficiency: Condition of a component, piece of equipment or system that is not in compliance with Contract Documents.

F. Functional Performance Test Procedures: Commissioning protocols and detailed test procedures and instructions in tabular and script-type format that describe system configuration and steps required to determine if the system is performing and functioning properly. The CxA prepares these procedures to document Functional Performance Tests.

G. Functional Performance Test (FPT): Test of dynamic function and operation of equipment and systems executed by Contractor. Systems are tested under various modes, such as during low cooling or heating loads, high loads, component failures, unoccupied, varying outside air temperatures, life safety conditions, power failure, etc. Systems are run through all specified sequences of operation. Components are verified to be responding in accordance with Contract Documents. Functional Performance Tests are executed after start-ups and Prefunctional Checklists are complete.

H. Integrated System Test Procedures: Commissioning protocols and detailed test procedures and instructions in tabular and script-type format that fully describe system configurations and steps required to determine if the interacting systems are performing and functioning properly.

I. Prefunctional Checklist: A list of static inspections and material or component tests that verify proper installation of equipment (e.g., belt tension, oil levels, labels affixed, gages in place, sensors calibrated, etc.). Prefunctional Checklists must include the manufacturer's Start-up checklist(s). Contractor shall sign Prefunctional Checklists when all components are verified complete.

J. Start-up: The activities where equipment is initially energized, tested, and operated. Start-up is completed prior to Functional Performance Tests.

K. Test Requirements: Requirements specifying what systems, modes and functions, etc. must be tested. Test requirements are not detailed test procedures. Test requirements and acceptance criteria are specified in the Contract Documents.

1.04 SUBMITTALS

A. Contractor shall provide the CxA with submittal documentation required for Commissioning work. At minimum, documentation shall include: Detailed Start-up procedures, Full sequences of operation, Operating and Maintenance data, Performance data, Functional Performance Test Procedures, Control Drawings, and details of Owner-Contracted tests.

B. Contractor shall submit other relative documentation for impact on FPT's of the systems to the CxA:

1. Shop Drawings and product submittal data related to systems or equipment to be commissioned. The Subcontractor responsible for the FPT shall review and incorporate comments from the CxA via the AE and Contractor.

2. Factory Performance Test Reports: Submit all factory performance testing requirements to the CxA and AE prior to executing the FPTs.

3. Completed equipment Start-up certification forms along with the manufacturer's field or factory performance and Start-up test documentation; incorporate manufacturer's Start-up procedures with Prefunctional checklists prior to commencing with the scheduled FPTs.

4. Operating and Maintenance (O&M) information per requirements of Division 01; the Contractor shall ensure that the O&M manual content, marked-up record Drawings and Specifications, component submittal drawings, and other pertinent documents are submitted to the CxA for review.

1.05 CONTRACTOR'S RESPONSIBILITIES

A. Perform commissioning tests at the direction of the GC based upon procedures developed by the CxA.

B. Attend construction phase controls coordination meeting.

C. Attend testing, adjusting, and balancing review and coordination meeting.

D. Participate in HVAC systems, assemblies, equipment, and component maintenance orientation and inspection as directed by the GC.

E. Provide information requested by the GC for final commissioning documentation.

F. Provide measuring instruments and logging devices to record test data, and provide data acquisition equipment to record data for the complete range of testing for the required test period.

1.06 CxA's RESPONSIBILITIES

A. Provide Project-specific construction checklists and commissioning process test procedures for actual HVAC&R systems, assemblies, equipment, and components to be furnished and installed as part of the construction contract.

B. Witness commissioning testing.

C. Verify testing, adjusting, and balancing of Work are complete.

D. Provide test data, inspection reports, and certificates in Systems Manual.

1.07 COMMISSIONING DOCUMENTATION

Provide the following information to the CxA for inclusion in the commissioning plan:

1. Plan for delivery and review of submittals, systems manuals, and other documents and reports.

2. Identification of installed systems, assemblies, equipment, and components including design changes that occurred during the construction phase.

3. Process and schedule for completing construction checklists and manufacturer's prestart and startup checklists for HVAC systems, assemblies, equipment, and components to be verified and tested.

4. Certificate of completion certifying that installation, prestart checks, and startup procedures have been completed.

5. Certificate of readiness certifying that HVAC systems, subsystems, equipment, and associated controls are ready for testing.

6. Test and inspection reports and certificates.

7. Corrective action documents.

8. Verification of testing, adjusting, and balancing reports.

PART 2 - PRODUCTS

2.01 TEST EQUIPMENT

A. All testing equipment shall be of sufficient quality and accuracy to test and/or measure system performance with the tolerances specified. If not otherwise noted, the following minimum requirements apply: Temperature sensors and digital thermometers shall have a certified calibration within the past year and a resolution of plus or minus 0.1 degree F. Pressure sensors shall have a accuracy of plus or minus 2.0 percent of the value range being measured (not full range of meter) and have been calibrated within the last year. All equipment shall be calibrated according to the manufacturer's recommended intervals and when dropped or damaged. Calibration tags shall be affixed or certificates readily available.

PART 3 – EXECUTION

3.01 PREPARATION

A. Construction Phase:

1. Attend Commissioning Meetings scheduled by the GC and CxA to facilitate the Commissioning process.

2. Provide requested documentation to the GC and CxA, prior to O&M manual submittals, for development of Prefunctional Checklist and Functional Performance Tests procedures. This will include detailed manufacturer’s installation and Start-up, operating, troubleshooting and maintenance procedures, full details of any Owner-contracted tests, full factory testing reports, if any, and full warranty information, including all responsibilities of the Owner to keep the warranty in force clearly identified.

3. During the Start-up and initial checkout process, execute and document related portions of the Prefunctional Checklists for all commissioned equipment.

4. Perform and clearly document all completed Prefunctional Checklists and Start-up procedures. Provide a copy to the GC and CxA prior to the Functional Performance Test.

5. Address current AE and Owner punch list items before Functional Performance Tests. Air and water test, adjust and balance shall be completed with discrepancies and problems remedied before Functional Performance Tests of the respective air or water related systems are executed.

6. Provide skilled technicians to execute starting of equipment and to assist in execution of Functional Performance Tests. Ensure that they are available and present during the agreed-upon schedules and for a sufficient duration to complete the necessary tests, adjustments, and problem solving.

7. Correct deficiencies (differences between specified and observed performance) as interpreted by the AE, CxA, GC and/or Owner. Retest the system and equipment.

8. Compile all Commissioning records and documentation to be included in a Commissioning and Closeout Manual.

9. Prepare O&M manuals according to the Contract Documents, including clarifying and updating the original sequences of operation to as-built conditions.

10. Provide training of the Owner's operating personnel as specified.

11. Coordinate with equipment manufacturers to determine specific requirements to maintain the validity of the warranty.

B. Warranty Phase:

1. Execute seasonal or deferred tests according to the Specifications.

a. Complete deferred tests as part of this Contract during the Warranty Period. Schedule this activity with Owner. Perform tests and document and correct deficiencies. CxA may observe the tests and review and approve test documentation and deficiency corrections.

b. If any check or test cannot be completed prior to Substantial Completion due to the building structure, required occupancy condition, or other condition, execution of such test may be delayed to later in the Warranty Period, upon approval of the Owner. Contractor shall reschedule and conduct these unforeseen deferred tests in the same manner as deferred tests.

2. Correct deficiencies and make necessary adjustments to O&M manuals, Commissioning documentation, and as-built drawings for applicable issues identified in any seasonal testing.

3.02 PREFUNCTIONAL CHECKLISTS

A. General: Prefunctional checklists (PC) are important to ensure that the equipment and systems are operational. It ensures that functional performance testing (in-depth system checkout) may proceed without unnecessary delays. Each piece of equipment receives full prefunctional checkout. No sampling strategies are used. The checklist is intentionally designed as a broad, high level check of the completed installation and is not intended to cover all the detailed checks necessary during the installation process or during the vendor startup required for some equipment.

B. The PC for a given system must be successfully completed by the installing Subcontractor prior to the beginning of the TAB field work and formal functional performance testing of equipment or subsystems of the given system.

C. PC forms have been developed and are included in this specification section under subparagraph 3.06, Forms. The PC should be used to inspect the completed installation of major HVAC equipment. If a PC line item does not apply, indicate this by checking the N/A column rather than the OK column. PC line items that are not complete or are not in compliance at inspection should not be checked as OK until they are completed. The section below each PC shall be utilized for recording comments or making notes. As the work progresses, other forms may be developed as necessary for special pieces of equipment not adequately covered by the included PC forms.

D. Copy the PC and complete a separate form for each individual piece of equipment where multiple similar or identical pieces of equipment are installed.

E. The mechanical, electrical and HVAC controls contractors' representatives shall inspect the installed HVAC equipment using the PC and initial and date each item that passes inspection. Only individuals that have direct knowledge and witnesses that a line item task on the prefunctional checklist was actually performed shall initial or check that item off. It is not acceptable for witnessing supervisors to fill out these forms.

F. The GC shall oversee the subs and the vendors in collecting and retesting deficiencies or uncompleted items. The installing subs or vendors shall correct all areas that are deficient in the checklists and tests in a timely manner, and shall notify the GC as soon as outstanding items have been corrected and resubmit an updated start-up report on the original non-compliance report.

G. When each item on the checklist has passed inspection, the GC shall also inspect the installed equipment and sign the checklist to certify the installation is complete and acceptable from a quality standpoint. The signed checklist is to be included in the project closeout documents delivered to the owner.

3.03 FUNCTIONAL PERFORMANCE TESTING

A. Objectives and Scope: The objective of functional performance testing is to demonstrate that each system is operating according to the documented design intent and Contract Documents. Functional testing facilitates bringing the systems from a state of substantial completion to full dynamic operation. Additionally, during the testing process, areas of deficient performance are identified and corrected, improving the operation and functioning of the systems.

B. Specific FPT forms have been developed and are included in this specification section under subparagraph 3.06, Forms. Prior to execution, the GC shall provide a copy of the test procedures to the sub(s) who shall review the tests of feasibility, safety, equipment, and warranty protection. As the work progresses, other forms may be developed as necessary for special pieces of equipment not adequately covered by the FPT forms included with this specification section.

C. The GC and subs shall document the results of all FPT using the included procedural forms. Once the FPT has been completed successfully by the GC and subs, the GC shall repeat the FPT in the presence of the CxA.

D. The GC is responsible for including the FPT both by subs and the CxA in the construction schedule. The GC is responsible for contacting the project architect and scheduling the design consultants and owners representative to witness the FPT. The CxA, design consultants and owners representatives reserve the right to terminate the FPT if in their opinion the test results indicate the systems are not progressing properly. The GC and their subs contractor shall be responsible for return labor and travel expenses for any retest. All systems required

for owner occupancy will have their FPT completed and approved prior to Owner occupancy, opposed season test excluded.

E. The GC shall incorporate in the project closeout documents all the approved FPT results and procedures.

3.04 COORDINATION BETWEEN TESTING PARTIES

A. Factory Start-ups: Factory Start-ups are specified for certain equipment. Factory Start-ups generally are Start-up related activities that will be reviewed and checked prior to Functional Performance Tests. All costs associated with factory Start-ups shall be included with the contract price unless otherwise noted. Notify the Commissioning Team of the factory Start-up schedule and coordinate these factory Start-ups with witnessing parties. The Commissioning Team members may witness these Start-ups at their discretion.

B. Independent Testing Agencies: For systems that specify testing by an independent testing agency, the cost of the test shall be included in the Contract price unless otherwise noted. Testing performed by independent agencies may cover aspects required in the Prefunctional Checklists, Start-ups, and Functional Performance Tests. Coordinate with the independent testing agency so that Owner and/or AE can witness the test to ensure that applicable aspects of the test meet requirements.

3.05 TRAINING

Submit a written training plan to the CxA and Owner for review and approval. Contractor's training plan shall cover the following elements:

A. Equipment included in training.

B. Intended audience.

C. Location of training.

D. Objectives.

E. Subjects covered.

F. Duration of training on each subject.

G. Instructor for each subject.

H. Methods (classroom lecture, video, Site walk-through, actual operational demonstrations, written handouts, etc.).

I. Instructors and qualifications.

Contractor shall have the following training responsibilities:

A. Provide a training plan in accordance with Division 01.

B. Provide Owner personnel with comprehensive training in the understanding of the systems and the operation and maintenance of each major piece of commissioned mechanical equipment or system.

C. Training shall start with classroom sessions, if necessary, followed by hands-on training on each piece of equipment, which shall illustrate the various modes of operation, including Start-up, shutdown, fire/smoke alarm, power failure, etc.

D. During any demonstration, should the system fail to perform in accordance with the requirements of the O&M manual or sequence of operations, the system will be repaired or adjusted as necessary and the demonstration repeated.

E. The appropriate trade or manufacturer's representative shall provide the instructions on each major piece of equipment. This representative may be the Start-up technician for the piece of equipment, the installing contractor, or manufacturer's representative. Practical building operating expertise as well as in-depth knowledge of all modes of operation of the specific piece of equipment is required. More than one party may be required to execute the training.

F. The training sessions shall follow the outline in the Table of Contents of the O&M manual and illustrate whenever possible the use of the O&M manuals for reference.

G. Training shall include:

1. Usage of the printed installation, operation and maintenance instruction material included in the O&M manuals.

2. Review of the written O&M instructions emphasizing safe and proper operating requirements, preventative maintenance, special tools needed and spare parts inventory suggestions. The training shall include Start-up, operation in all modes possible, shutdown, seasonal changeover and any emergency procedures.

3. Discussion of relevant health and safety issues and concerns.

4. Discussion of warranties and guarantees.

5. Common troubleshooting problems and solutions.

6. Explanation of information included in the O&M manuals and the location of all plans and manuals in the facility.

7. Discussion of any peculiarities of equipment installation or operation.

H. Hands-on training shall include Start-up, operation in all modes possible, including manual, shutdown, and any emergency procedures and maintenance of all pieces of equipment

I. Training shall occur after Functional Performance Tests are complete and shall be scheduled with the Owner's Project Manager.

3.06 FORMS

A. Prefunctional Checklists.

B. Functional Performance Checklists.

C. Prior to commissioning, calibrate and document every HVAC controls sensor by instrumentation and BAS. Provide a list of every sensor value from the BAS after final calibration vs. reading by the calibration instrument.

END OF SECTION

Division 25	Integrated Automation	Attachment
250000.	GENERAL: Include complete sections in the specifications for this division of the Work, in addition to notes indicated on drawings. The Design-Build Team is responsible for complete coordination of statements in the specifications and the notes on the drawings.	
250000.1	**GENERAL REQUIREMENTS**	
250000.1.1	Before design begins, consult Metro General Services to determine exact requirements for connection to control centers. In addition to requirements for DDC Systems, all equipment included in this section must be considered in design and installation of equipment.	
250000.1.2	The design drawings shall detail the required minimum lengths of undisturbed air or water flow upstream/downstream of flow rate measurement devices used by the BAS or by the TAB contractor.	
250000.1.3	All building automation systems will need to be web based and viewable on any Android based tablet or smartphone. The Push button shall be shown on the BAS home page and controllable from the BAS for testing and emergency purposes.	
250000.1.4	An emergency HVAC stop button should be installed for Metro Police precincts. Coordinate location of push-button device with Metro Project Manager.	
250000.1.5	MANUFACTURERS: The approved manufacturers are outlined in Division 23. Other systems must be submitted to Metro Nashville General Services for approval. The BAS system manufacturer choices shall be based on the number of expected control points. The selected and approved manufacturer shall provide all devices as needed for a completely operable web-based system meeting the requirements of this specification utilizing no third party devices.	
250000.1.6	WARRANTY: Equipment warranty periods shall not be less than 36 months from start-up, including control devices (dampers, actuators, sensors, etc.) and software. Substantial Completion Date as defined in the contract establishes dates of warranty periods on equipment. Define the source of such warranties (whether by the manufacturer, supplier, and/or contractor), phone numbers, and contact persons to activate warranty issues.	

Division 25	Integrated Automation	Attachment
250000.2	**BAS POINTS LIST**	
250000.2.1	A BAS points list, controls and wiring diagrams shall be included in either the specification or in the drawings. Points should be provided for: a. the emergency generator run time and fuel oil levels, b. lighting control systems, c. domestic hot water heater supply temperatures. Coordinate with the Metro General Service project manager for other building system alarm or monitor requirements.	
250000.2.2	The BAS contractor will provide a points list that is consistent with Metro standards. The following points list should be utilized for addresses of all points: (For equipment not listed, coordinate with the Metro PM prior to submittal preparation)	

Rooftop Unit	RTU	Valve Position	VlvPos
Air Handling Unit	AHU	Damper Position	DmprPos
Makeup Air Unit	MAU	Supply Static Pressure	SSP
Energy Recovery Ventilator	ERV	Supply Air Humidity	SAH
Chiller	CH	Return Air Humidity	RAH
Boiler	B	Outside Air Humidity	OAH
Supply Air Fan	SAF	Supply Air Damper	SAD
Return Air Fan	RAF	Return Air Damper	RAD
Exhaust Air Fan	EAF	Outside Air Damper	OAD
Outside Air Fan	OAF	Minimum OA Damper	MOAD
Supply Air	SA	Cooling Coil Valve	CCV
Return Air	RA	PreHeat Coil Temp	PHT
Exhaust Air	EA	HWS Temp	HWST
Outside Air	OA	HWR Temp	HWRT
Discharge Air Temp	DAT	CHWS Temp	CHST
Entering Air Temp	EAT	CHWR Temp	CHRT
Leaving Air Temp	LAT	PreHeat Valve	PHV
Entering Water Temp	EWT	Exhaust Air Damper	EAD
Leaving Water Temp	LWT	Humidifier	HUM
Supply Air Temp	SAT	Air Flow Monitoring Station	AFMS
Return Air Temp	RAT	Supply Smoke Detector	SSD
Mixed Air Temp	MAT	Return Smoke Detector	RSD
Setpoint	STPT	Hot Water Pump	HWP
Hot Water Supply	HWS	Hot Water Diff Pressure	HWDP
Hot Water Return	HWR	Outside Air Temp	OAT
Chilled Water Supply	CHWS	Chilled Water Valve	CHV
Chilled Water Return	CHWR	Condenser Water Valve	CWV
Condenser Water Supply	CWS	Chilled Water Supply Flow	CHSF
Condenser Water Return	CWR	Chilled Water Return Flow	CHRF
Cooling Tower Water Supply	CTWS	Bypass Valve	BPV
Cooling Tower Water Return	CTWR	Chilled Water Diff Pressure	CHDP
Heat Pump Water Supply	HPWS	Chilled Water Pump	CHWP
Heat Pump Water Return	HPWR	Condenser Water Pump	CWP

250000.3	Stand Alone Servers are not allowed for BAS or Light Controls.	
250000.4	The controls subcontractor is to conform to the control points naming standard provided by Metro.	

Division 25	Integrated Automation	Attachment
250000.5	**INSTALLATION**	
250000.5.1	System installation inspection and service reliability will be performed by the Contractor in the presence Metro General Services representatives.	
250000.5.2	The BAS contractor will be an integral part of the Commissioning process. Functionality of the installation and programmed sequences will be verified by an independent CxA in accordance with contract documents.	
255500.	**INTEGRATED AUTOMATION CONTROL OF HVAC**	
255500.1	OCCUPIED/UNOCCUPIED SETBACKS: Heating systems shall be equipped with controls that have the capability to automatically restart and temporarily operate the system as required to maintain zone temperatures above a heating setpoint adjustable down to 60°F or lower. Cooling systems shall be equipped with controls that have the capability to automatically restart and temporarily operate the system as required to maintain zone temperatures below a cooling setpoint adjustable up to 85°F to prevent high space humidity levels.	
255500.2	**TEMPERATURE CONTROLS / THERMOSTATS**	
255500.2.1	Dedicated temperature zone controls will be provided for multipurpose rooms, individual offices, IT rooms, and workroom spaces.	
255500.2.2	Temperature controls and heating systems shall be zoned to allow intermittent use areas such as multipurpose rooms to be turned off or down when not in use. The comfort level re-quirements shall be relaxed and the acceptable temperature range during cooling will be raised a few degrees and during heating will be lowered a few degrees.	
255500.2.3	Thermostats in public areas shall have lockable covers or shall be tamperproof. The use of duct sensors in return duct shall be considered by the Design-Builder in public areas.	
255000.3	**DIRECT DIGITAL CONTROL (DDC) SYSTEM**	
255000.3.1	To achieve precise control of all HVAC systems and provide the means to integrate standard control functions with energy saving strategies, it is intended that all newly constructed buildings be controlled using stand-alone microprocessor, web based, BACNET compliant DDC computer systems. All hardware, software, and miscellaneous equipment required to insure that the DDC system can be managed from the Metro LAN shall be provided as a part of the project. Installer shall be responsible for all low voltage wiring installation and must coordinate networking and server installation (including specifications) with Metro's IT Department.	
255000.3.2	Each Design-Builder shall submit schemes for connecting new facilities to the control center(s). All DDC systems shall be connected to the appropriate control center(s) using a fiber optic network, a hard-wired communication trunk, or a telephone communications trunk, as dictated by the capabilities of the system selected and by the location of the building being controlled. Site specific desktop or laptop hardware is not required.	
255000.3.3	An interconnecting conduit system shall be installed between all DDC panels within a given building. This conduit system shall be extended to the appropriate building exit point to provide the link to the remote communications network. All communications cables required to provide the communications link between the DDC controllers and the external communications network shall be installed as a part of the project. The remote communications link shall be established and remote capabilities shall be verified by the contractor prior to final acceptance of the DDC system.	

Division 25	Integrated Automation	Attachment
255000.3.4	For systems with DDC of individual zone boxes reporting to the central control panel, static pressure setpoint shall be reset based on the zone requiring the most pressure; i.e., the setpoint is reset lower until one zone damper is nearly wide open.	
255000.3.5	All relevant DDC systems shall follow ASHRAE Standard 135-2010 - Bacnet A Data Communication Protocol for Building Automation and Control Networks with any updated addendums.	
255000.3.6	The DDC's and/or Building Automation System (BAS) for HVAC will provide remote access for control and monitoring of both the systems and energy consumption. The BAS shall be BACNET compatible with web based access. No separate server or PC shall be required to access controls. Controls shall access all viable control points of equipment and shall include building layout graphical interface. All BAS systems shall be set up to allow alarms or faults to be emailed and/or texted to various Metro email recipients as set forth per Metro. Installer shall co-ordinate wiring and cabling with Metro's IT Department.	
259500.	**INTEGRATED AUTOMATION CONTROL SEQUENCES FOR HVAC**	
259500.1	**VAV AIR HANDLING UNITS**	
259500.1.1	VAV air handling units shall be designed to operate with a return fan.	
259500.1.2	VFDs shall be furnished for both the supply and return fans. A data interface between the VFD processor and the DDC shall be specified to enable the DDC System to obtain VFD data.	
259500.1.3	Whenever a unit is commanded off by operator command, all outside air dampers and relief dampers shall close, fire/smoke dampers close, the return dampers shall open, the chilled water valve shall close, the preheat process, if activated, shall stay under control of its input sensor, and the supply, return, and interlocked exhaust fans shall shutdown.	
259500.1.4	Whenever the unit is commanded on by operator command, minimum outside air dampers, return damper, and fire/smoke dampers shall open. After the fire/smoke dampers are open (set time delay accordingly), the supply fan shall start. When the supply fan has started, the return fan and interlocked exhaust fans shall start.	
259500.1.5	Flow measuring devices shall be specified to measure the return and supply fans' air flows. Where fan inlet stations cannot be provided due to equipment configuration, use duct air flow measuring devices in both supply and return, or use a combination of "sum of the boxes" from the BAS system for supply air flow, and duct measuring devices for return.	
259500.1.6	The supply duct static pressure shall be maintained above the minimum specified by the manufacturer of the terminal reheat boxes. A static pressure sensor located at the appropriate point in the supply duct shall be used to control the supply fan VFD to maintain the supply duct static pressure setpoint (adj.). A high limit static pressure sensor shall be installed between the supply fan discharge and the first downstream damper to prevent over pressurization of the supply duct. If the high limit sensor reaches its high limit set point (not user adj.), the DDC System shall shut off the supply fan, initiate an alarm, and require a local manual reset in order to restart the fan. If necessary, provide a similar low limit static pressure sensor upstream of the supply fan or return fan to avoid damaging the low pressure duct due to a damper failing closed.	
259500.1.7	The design minimum outside air quantity shall be achieved by modulating the return fan VFD to maintain a fixed differential (adj.) CFM between the measured supply and return fan flows. The DDC System shall control the differential to within 2% of the setpoint.	

Division 25	Integrated Automation	Attachment
259500.1.8	Terminal boxes and reheat coils shall be specified with discharge air sensors.	
259500.2	**CONSTANT VOLUME AIR HANDLING UNITS**	
259500.2.1	Constant volume air handling units with economizers shall have return fans. In medium pressure systems, VFDs and flow measuring instrumentation shall be furnished for both the supply and return fans, if a return fan is used. If a return fan is used, the outside air shall be controlled by varying the speed of the return fan to maintain the desired differential between the supply and return flows as described for VAV Air Handling Units above.	
259500.2.2	A static pressure sensor located at the appropriate point in the supply duct shall be used to control the supply fan VFD to maintain the supply duct static pressure set point (adj.). The supply duct static pressure sensor shall be maintained above the minimum specified by the manufacturer of the terminal reheat boxes. The DDC System will have a high limit control similar to the VAV AHU described above. Both the normal static pressure and high limit controls will be used on both medium and high pressure systems.	
259500.2.3	Unit startup and shut down by operator command shall be similar to the method above described for the VAV AHU.	
259500.2.4	Terminal boxes and reheat coils will be specified with discharge air sensors.	
259500.3	**ECONOMIZER OPERATION**	
259500.3.1	The design engineer shall determine whether air side economizer will provide an attractive return on investment based on the project size and scope, and the type of equipment selected for use. Where the Designer specifies air side economizer, enthalpy comparison or a temperature setpoint shall index the AHUs into air economizer cycles based on a comparison of energy savings between the two methods. Metro prefers temperature setpoint.	
259500.3.2	For enthalpy comparison, outside air enthalpy shall be calculated and compared to each AHU's return air enthalpy every 10 minutes using a single outside air temperature and relative humidity sensor. If the return air enthalpy is greater than the outside air enthalpy, the AHU shall switch to the economizer mode. An enthalpy differential of setpoint of 0.5 BTU/lb. (adj.) shall be used to prevent excessive cycling.	
259500.3.3	In the economizer mode, the outside, relief and return dampers shall modulate to maintain a discharge air temperature within +/- 1.0 degree of an adjustable discharge air tem-perature set point. The chilled water valve shall be modulated to supplement "free" cooling and maintain the discharge air temperature setpoint when the economizer dampers are greater than 95% open to outside air. The chilled water valve and stroking of dampers shall be sequenced so the valve remains closed until the economizer dampers are greater than 95% open.	
259500.3.4	An averaging mixed air sensor shall be installed on the entering side of the first coil. The sensor(s) shall be installed in a serpentine manner across the face of the coil so that one lineal foot of sensor element is installed per square foot of coil surface area.	
259500.3.5	At a mixed air temperature of 10°F (adj.) below the discharge air temperature setpoint, the DDC shall alarm, disable/close the economizer dampers (reverting to minimum out-side air operation), fully open the chilled water valve, and start the appropriate chilled water pump(s).	

Division 25	Integrated Automation	Attachment
259500.3.6	Preheat coils shall be controlled to maintain a mixed air temperature within ½ degree of an adjustable (52°F) setpoint. Preheat shall be disabled above an adjustable (45°F) outside air temperature. In-line circulating pumps shall be considered for preheat coils located in the mixed air plenum.	
259500.3.7	Preheat should not be used until the outside air economizer dampers are at the minimum position.	
259500.3.8	Preheat coils located only in the minimum outside air stream shall have re-circulating pumps and be controlled by a sensor measuring the average temperature leaving the preheat coil.	
259500.3.9	For new construction, operation of all chillers shall terminate below an adjustable (50°F) outside air temperature. For additions to existing facilities, the design engineer should coordinate the operation of new chillers with the existing building chiller and AHU economizer operation.	
259500.4	**FREEZE PROTECTION**	
259500.4.1	A manual reset freeze-stat on the leaving side of the chilled water coil shall stop the AHU fans, command the chilled water valve to a full open position, and start the appropriate chilled water pump anytime the temperature of the air leaving the coil drops below the set point, 36°F (adj.). The minimum and maximum economizer outside air dampers and the relief damper shall close. The interlocked exhaust and return fans shall also stop. This DDC System shall initiate a separate identifiable alarm to the Metro for this condition.	
259500.5	**CHILLER LEAD/LAG CONTROL (SYSTEMS USING SECONDARY LOOP)**	
259500.5.1	The lag chiller (s) shall be started and stopped based on the calculated building load comparison of the actual primary and secondary loop flow rates. Calculate and display the building tonnage using the measured total secondary loop flow rate and secondary loop supply and return temperatures. Calculate and display the primary loop tonnage in a similar manner.	
259500.5.2	LAG CHILLER START: Start an additional chiller when the secondary flow rate is 95% (adj.) of the design chilled water flow of the running chillers for 10 minutes (adj.).	
259500.5.3	LAG CHILLER STOP: Stop the lag chiller most recently started when the secondary flow rate is less than 75% (adj.) of the result of the total design flow of the running chillers, less the design flow of the last chiller started for 10 minutes (adj.); or the difference between primary loop supply and return temperatures is less than 4°F for 10 minutes (adj.).	
259500.6	**COOLING TOWER CONTROL**	
259500.6.1	Any time a chiller is dropped off line, its associated cooling tower shall be isolated at the inlet.	
259500.6.2	The common condenser supply temperature to the chillers shall be used to control the cooling tower VSFD fans. The temperature set point shall be 70°F (adj.) corresponding to the minimum acceptable condenser supply temperature to the chillers. When multiple towers sharing a common return line are operating, the fan VSFDs shall be controlled to the same speed.	
259500.7	**HEATING SYSTEMS**	
259500.7.1	Each boiler shall be controlled by its unit mounted microprocessor based control system. The boilers shall be monitored by the DDC System.	

Division 25	Integrated Automation	Attachment
259500.7.2	The leaving water temperature setpoint shall be reset using a reset schedule based on outside air temperature.	
259500.8	**DX SYSTEM CONTROLS**	
259500.8.1	On any DX cooling system where outside air is not pretreated for dehumidification (ie, pre-cooled), a dehumidification sequence must be specified. The dehumidification sequence will be initiated by a room or return duct-mounted humidity sensor. Cooling will be engaged and reheat (electric or hot gas) will be activated.	

Division 26	Electrical	Attachment
260000.	GENERAL: Include complete sections in the specifications for this division of the Work, in addition to notes indicated on drawings. The Design-Build Team is responsible for complete coordination of statements in the specifications and the notes on the drawings.	
260000.1	During Design Development, consult Metro General Services regarding the choice of primary service voltage to be used, its location, and the capacity available.	
260000.2	Refer to the Metro ITS wiring standards for all low voltage wiring work [data, security, communications] included in this project.	
260000.3	Equipment shall not be installed in or stored in mechanical or electrical rooms unless permission is given by Metro General Services.	
260000.4	System Installation inspection and service reliability will be performed by the Contractor in the presence of Metro General Services representatives.	
260000.5	OVER CURRENT PROTECTION COORDINATION: The need for an over current coordination study shall be discussed with the Metro General Services project manager during design development. Applicable NFPA codes may require selective coordination for emergency and other systems. The coordination study shall show the system by elementary diagram and indicate the available fault current at critical points in the distribution system and the selection of over current devices for time and interrupting capacity coordination.	
260000.6	OFFICE FURNITURE POWER: All voice, data and power infrastructure and final terminations and connections shall be provided by the Design-Builder for open office systems furniture, hard wall office furniture, training rooms, etc.	
260000.7	BAR CODES: Metro requires that each contractor complete the following information for every piece of installed equipment. Coordinate bar code labeling with the Metro PM and General Contractor: Equipment Code; Floor Code; Room Code; Description; Equipment Category; Equipment Condition; Install Date; Manufacturer; Model Number; Purchase Date; Purchase Price; Serial Number.	
260000.8	WARRANTY: Equipment warranty periods shall not be less than 36 months from start-up. Substantial Completion Date as defined in the contract establishes dates of warranty periods on equipment. Define the source of such warranties (whether by the manufacturer, supplier, and/or contractor), phone numbers, and contact persons to activate warranty issues.	
260500.	**COMMON WORK RESULTS FOR ELECTRICAL**	
260500.1	WIRING DEVICES: All wiring devices provided shall be specification grade. New buildings - devices will be ivory or white. Existing buildings - Design Builders shall match existing color scheme that is prevalent throughout building.	
260500.2	RECEPTACLES: In standard size offices there shall be one electrical receptacle located on each wall. All interior receptacles shall be NEMA 5-20. -All Exterior Outlets to be waterproof. -Label Electrical Outlets that are dedicated.	
260500.3	SWITCHES: Switches provided for all uses shall be specification grade. Color scheme shall match receptacles. Switches provided at roof hatches or where provided outside of rooms they are serving shall be provided with pilot lights.	

Division 26	Electrical	Attachment
260500.4	COVERPLATES: Generally coverplates for flush-mounted standard devices shall match the device, in ivory or white, for interior use in new buildings. Warehouses and shop areas to have standard metal covers. Coverplates for exterior use shall be type, which allow NEMA 3R rating to remain while in use. Where exterior device could be exposed to vandalism, provide locking type coverplates.	
260500.5	RACEWAYS: Interior Conduit and Fittings: Minimum conduit size for power circuits shall be 3/4-inch. Minimum conduit sized for control wiring shall be 1/2 inch. Rigid Galvanized Threaded UL Labeled Conduit shall be specified for use outdoors, for indoors exposed (surface) applications from floor level to 8-feet above floor, sealed penetrations and hazardous locations. Threaded couplings shall be used with rigid conduit and I.M.C. I.M.C. may be used in place of rigid galvanized where permitted by code.	
260500.6	CONDUIT: UL Labeled, Galvanized Steel EMT (up to the 2 inch size) may be used in interior partitions, above ceilings, and for surface application higher than 8-feet above floor, except in corrosive and hazardous locations, where fiberglass conduit is required to be used. Insulating bushings and insulated throat fittings shall be used throughout EMT installations. Compression fittings shall be used. Setscrew type fittings shall not be used outdoors or indoors.	
260500.7	METERING: A utility meter with system display is required for each building, transformer, or service. Electrical meter shall have a BACnet connection and shall be monitored by the building BAS.	
260500.8	**GENERATORS**	
260500.8.1	Provide a diesel standby generator where legally required by applicable codes and as required by Metro Government. Generator shall be UL 2200 listed and provided by Kohler, Cummins, or Caterpillar. Unit shall have an engine mounted radiator, base (skid) fuel tank for minimum 24 hour operation (unless Metro requires longer run time), and weatherproof enclosure. All units shall have water jacket heater, battery heater (for outdoor), battery charger, lead acid or VRLA batteries, and fuel cooler.	
260500.8.2	Where make-up fuel is required from new or existing main fuel tank, provide duplex fuel pumps and float switches. Base and day tanks shall have EPA approved double wall construction with leak detection.	
260500.8.3	Automatic transfer switch (ATS) (or switches) shall be as required by code for the application and shall be 4-pole unless 3-pole are specifically approve by Metro for small facilities. ATS shall have programmed transition or neutral position where used for load shed (i.e. paralleled generators).	
260500.8.4	All generators shall be in accordance with NFPA 110, Level 1.	
260900.	**INSTRUMENTATION AND CONTROL FOR ELECTRICAL SYSTEMS**	
260900.1	All Exterior Area and Security Lighting shall be "dusk on and dawn off", powered from one location in the building, and controlled from the photo control, with provisions for manual override. Time clock control shall not be used on exterior or security lighting.	

Division 26	Electrical	Attachment
260900.2	**LIGHTING CONTROL**	
260900.2.1	Lighting Control panels shall be specified for every Metro project and be capable of BACnet interface with the building automation system (BAS). Lighting Controls (inside and out) must be from the same manufacturer. This is to be provided by the BAS contractor. Lighting integration will be pulled by the BAS contractor and included in their bid.	
260900.2.2	MULTIPLE SWITCHING: The use of multiple switching shall be evaluated for each space and condition.	
260900.2.3	Where possible, switching shall be circuited to effectively use natural lighting from windows; to permit light reduction during partial occupancy; and to permit reduced lighting for custodial activity.	
260900.2.4	MANUFACTURERS: Lutron; Hubbell; Cooper; or equal, as approved by Metro General Services.	
260900.3	**OCCUPANCY SENSORS**	
260900.3.1	Occupancy Sensors shall not be used as the sole means of switching.	
260900.3.2	Manual switches will be provided in all areas with occupancy sensors.	
260900.3.3	Occupancy sensors shall not be used in mechanical rooms or restrooms.	
260900.3.4	At installation, set all sensors to maximum sensitivity and maximum time delay.	
260900.4	**DIMMING CONTROL**	
260900.4.1	Each dimming module shall be U.L. tested and tested specifically for the type of load it is controlling.	
260900.4.2	Each dimmer module shall possess a means of easily disconnecting power on an individual module-by-module basis.	
260900.4.3	Dimming panels shall be cooled without the use of cooling fans with no exception, and shall be capable of operating as such in an environment of 0 degree to 40 degree centigrade.	
260900.4.4	Satisfactory independent laboratory test results shall be required, that at +40 degree centigrade and at full load, the maximum temperatures of both filter chokes and SCRs/Triacs are not exceeded.	
260900.4.5	There shall be one air-gap positive off relay for dimmer, either integral to the dimmer or mounted elsewhere in the same panel.	
260900.4.6	All controls shall have the capabilities of reverting back to their previous status after any duration of power outage (power failure memory), without the use of any type of rechargeable or trickle-charge type of battery.	
260900.4.7	Dimming systems shall be provided with ten years warranty.	
262000.	**LOW-VOLTAGE (110V-480V) ELECTRICAL TRANSMISSION**	
262000.1	LOW-VOLTAGE SWITCHGEAR - SERVICE ENTRANCE: Main breakers and feeder breakers or switches shall be equipped with ground fault protection as required by applicable codes. In critical applications provide coordinated ground fault protection on feeder breakers. Provide settings and coordination information with the service manuals. All circuit breakers with solid state trip units shall comply with the following standards: ANSI/IEEE C37.90.1 – Surge Withstand Capability (SWC).	
262000.2	The maximum operating force required to open or close a switch or breaker shall not be greater than 75 pounds on the operating handle.	

Division 26	Electrical	Attachment
262000.3	Indicator lamps shall be LED or transformer type utilizing low voltage lamps.	
265000.	**LIGHTING**	
265000.1	Provide Emergency Egress lighting.	
265000.2	Special Lighting Applications shall comply with the latest I.E.S. Standard or as directed by Metro General Services. The economic feasibility of LED fixtures for indoor or outdoor applications should be discussed with Metro General Services during the design development phase.	
265000.3	TEMPORARY SITE LIGHTING DURING CONSTRUCTION: Sufficient lighting shall be provided such that SECURITY may observe the entire area. Provide a light level of 1 to 3 foot-candles. The contractor is responsible for providing temporary lighting outside of the project area if the project interrupts the normal lighting to the area.	
265000.4	**LIGHT LEVELS**	
265000.4.1	Lighting requirements for the most common building areas are set forth in this standard. The referenced light levels are understood to be a maintained light level. Light levels are measured at a 30-inch height from the floor or at the actual work surface, and represent the average level for the area or workstation. Circulation areas beyond workstations should be lighted to one-third the light level of the workstation, but in no case less than 20-foot candles.	
265000.4.2	OFFICE AREAS AND CONFERENCE ROOMS: Provide 40 to 60 foot-candle light level Video display terminals (VDT's) or computers should be illuminated with 30 to 50 foot candles as recommended by the latest edition of the Illuminating Engineering Society (IES) and National Institute for Occupational Safety and Health (NIOSH) standards. Switching in Conference rooms shall provide for switching the fixtures in the front and seating area separately to facilitate the use of overhead projectors, etc.	
265000.4.3	OFFICE WORK STATIONS: Provide 50 to 80 foot-candle light level at workstation. Light fixtures at workstations with video display terminals or computers should be located perpendicular to device in order to minimize glare and viewing difficulty.	
265000.4.4	CRITICAL WORK STATIONS: Work Station Where Critical or Fine Work is Performed, as in Laboratories and Drafting Rooms: Provide 100 to 120 foot-candle light level.	
265000.4.5	BUILDING SERVICE AREAS: Provide 10 to 20 foot-candle light level Corridors, Stairwells, Lobby, Waiting Rooms, Storage and Service Areas.	
265000.4.6	RESTROOMS: Provide 20 to 30 foot-candle light level in Rest Rooms, Lockers, and Showers. Provide one night light in all rest rooms and locker rooms.	
265000.4.7	BUILDING EXTERIOR: Provide 1 foot-candle light level at Outside Security Stations, Building Perimeter, Parking Lot and Outside Walkways. Discuss exterior lighting levels needed for security with Metro General Service's project manager at Design Development.	
265000.4.8	LECTURE AND AUDITORIUM: Provide 40 to 60 foot-candle light level at all seating locations in Lecture Halls and Auditoriums. Provide separate switching for stage and seating area.	
265000.4.9	INTERIOR PARKING RAMP: Provide 5 to 10 foot-candle light level in the traffic lanes, 3 to 5 foot-candles in the parking areas, and 20 to 30 foot-candle light level at the entrance/exit.	

Division 26	Electrical	Attachment
265000.4.10	MECHANICAL ROOMS: Provide 50 to 80 foot-candle light level. Mechanical room fixtures shall be "Turrett style" industrial fluorescent fixtures with wire guards. Sockets shall be protected by housing and shall not be exposed.	
265100.	**INTERIOR LIGHTING**	
265100.1	FIXTURES: Fluorescent fixtures using 4 foot T5 tubes are required for general lighting, unless special circumstances exist or warrant other bulb efficiencies.	
265100.2	Specify the use of exit signs utilizing Light Emitting Diodes (LED) light source with life expectancy greater than (10) Ten years.	
265100.3	Mercury vapor lights are not recommended.	
265100.4	**INCANDESCENT LIGHTING**	
265100.4.1	Incandescent lighting may be used only with the written permission of Metro General Services.	
265100.4.2	Where incandescent lamps are used as part of an equipment system or alarm, provide six spare lamps of each installed wattage.	
265100.5	**FLUORESCENT FIXTURES**	
265100.5.1	All fixtures shall be independently supported from the structure above.	
265100.5.2	Fixtures shall be all metal with hinged shielding louvers.	
265100.5.3	Recessed fixtures with hinged frame open louvers may be used where required for architectural effect.	
265100.5.4	Two hundred seventy-seven (277) volt fixtures shall be used where this voltage is available.	
265100.6	**LIGHTING SAFETY**	
265100.6.1	Stairwells in buildings shall have sufficient fixtures so that the loss of one lamp or ballast will not leave the area dark.	
265100.6.2	The mounting of the fixtures shall not be at the extreme height but must be accessible for maintenance.	
265100.6.3	Position fixtures only on walls over landings at a maximum height of 8 feet.	
265100.6.4	Fixtures shall have lenses; no bare lamps shall be permitted.	
265600.	**EXTERIOR LIGHTING**	
265600.1	Design outdoor lighting to be fed from 100-amp switch, which in turn feeds a 100-amp contactor with coil controlled by a photocell.	
265600.2	Run all three phase legs and neutrals to lighting standards and fuse each pole individually.	
265600.3	Balance phases. Use twist-lock type photo controls to control contactors.	
265600.4	Specify that contractors shall fuse all pole-mounted outdoor lighting fixtures to allow disconnecting of shorted fixtures until replacement or repair can be scheduled.	
265600.5	**FIXTURES**	
265600.5.1	LED bulbs/fixtures mounted on the building or on suitable stands are required for all exterior site lighting.	
265600.5.2	Fixtures shall be automatically controlled by photocell(s) or astronomical clock(s) via the lighting control system.	

Division 26	Electrical	Attachment
265600.5.3	Light Control shall be provided on all exterior lighting fixtures.	
265600.5.4	The fixture shall be insect proof.	
265600.5.5	Vandal proof fixtures shall be used if the fixtures are mounted 10 feet or less off the ground.	
265600.5.6	Ensure Light Poles are specified with an enclosure at the base; Ensure that enclosure is installed.	
265600.6	**FIXTURE LOCATION**	
265600.6.1	Fixtures shall be located in such a manner that dark voids and excessive glare in windows are eliminated.	
265600.6.2	Accessibility for servicing must be considered in locating fixtures.	
265600.6.3	Consideration must also be given to light spillage onto adjacent facilities.	
265600.6.4	Use directional or shielded lighting as necessary.	
265600.6.5	Check with Metro General Services for the type of lights. Grounding rods shall be installed in all lighting poles.	
260000.8	**CAR CHARGING STATIONS**	
260000.8.1	Provide Electric Car Charging Stations. Confirm number and location with LEED Scorecard for Project. Contractor to Install, Set-up and Register.	
260000.8.2	ChargePoint - Current Model [Not discontinued models] to be provided.	**D**
260000.8.3	Quantity - Minimum 1 dual port station, consult LEED Project Scorecard to determine is more than 1 is required on a project-by-project basis.	
260000.8.4	Handicapped Accessible	
260000.9	**Defibulators / AEDs:** Locations indicated on drawings; Include mounting height indication.	**B**
481400.	**SOLAR ENERGY - ELECTRICAL PANELS AND SYSTEMS**	
481400.1	Coordinate software and interface of electrical solar collections panels.	
481400.2	Approved Manufacturers of Solar Inverters 1. ABB/Aurora 2. SMA/Sunny Portal 3. Deck Monitoring/Satcon Powergate	

26 08 00 - COMMISSIONING FOR ELECTRICAL

PART 1 - GENERAL

1.01 RELATED DOCUMENTS

A. Drawings and general provisions of the Contract, including General and Supplementary Conditions and Division 01 Specification Sections, apply to this Section.

B. Specifications throughout all Divisions of the Project Manual are directly applicable to this Section, and this Section is directly applicable to them.

1.02 SUMMARY

A. The purpose of this Section is to define Contractor responsibilities in the commissioning process, which are being directed by the Commissioning Authority (CxA) and General Contractor. Other electrical system testing is required under other Division 26 Specification Sections. National Electrical Installation Standards (NEIS) NECA 90-2004, "Recommended Practice for Commissioning Building Electrical Systems", 27th Volume of the NEIS Series, provides additional guidance for the commissioning of electrical systems.

B. Commissioning requires the participation of the Contractor to ensure that all systems are operating in a manner consistent with the Contract Documents. General Commissioning requirements and coordination are detailed in Division 01. Division 26 shall be familiar with all parts of Division 01 and the Commissioning Plan issued by the Contractor and shall execute all Commissioning responsibilities assigned to them in the Contract Documents and include the cost of Commissioning in the Contract price.

C. The commissioning process does not take away from or reduce the responsibility of the system designers or installing contractors to provide a finished and fully functioning product.

D. Electrical systems to be commissioned include the following:

1. Lighting Fixtures and Controls.

2. Equipment Monitoring.

3. Emergency Generators and Distribution System.

4. Uninterruptible Power Systems

1.03 DEFINITIONS

A. Commissioning: A systematic process confirming that building systems have been installed, properly started, and consistently operated in strict accordance with the Contract Documents, that all systems are complete and functioning in accordance with the Contract Documents at Substantial Completion, and that Contractor has provided Owner adequate system documentation and training. Commissioning includes deferred and/or seasonal tests as approved by Owner.

B. Commissioning Authority (CxA): The designated person, company, or entity that plans, schedules, and coordinates the commissioning team to implement to commissioning process. Owner will engage the CxA under a separate contract.

C. Commissioning Plan: Document prepared by Contractor and approved by Owner that provides the structure, schedule, and coordination plan for the Commissioning process from the construction phase through the warranty period. The Commissioning Plan must satisfy the Owner's test requirements.

D. Commissioning Team: Working group made up of representative(s) from the Architect/Engineer (AE), General Contractor (GC), Owner's Test, Adjust, and Balance (TAB) Firm, Building Automation System (BAS) provider, Mechanical Contractor (MC), Electrical Contractor (EC), specialty manufacturers and suppliers, and Owner.

E. Deficiency: Condition of a component, piece of equipment or system that is not in compliance with Contract Documents.

F. Functional Performance Test Procedures: Commissioning protocols and detailed test procedures and instructions in tabular and script-type format that fully describe system configuration and steps required to determine if the system is performing and functioning properly. The CxA prepares these procedures to document Functional Performance Tests.

G. Functional Performance Test (FPT): Test of dynamic function and operation of equipment and systems executed by Contractor. Systems are tested under various modes, such as during low cooling or heating loads, high loads, component failures, unoccupied, varying outside air temperatures, life safety conditions, power failure, etc. Systems are run through all specified sequences of operation. Components are verified to be responding in accordance with Contract Documents. Functional Performance Tests are executed after start-ups and Prefunctional Checklists are complete.

H. Integrated System Test Procedures: Commissioning protocols and detailed test procedures and instructions in tabular and script-type format that fully describe system configurations and steps required to determine if the interacting systems are performing and functioning properly.

I. Prefunctional Checklist: A list of static inspections and material or component tests that verify proper installation of equipment. Prefunctional Checklists must include the manufacturer's Start-up checklist(s). Contractor shall sign Prefunctional Checklists when all components are verified complete.

J. Start-up: The activities where equipment is initially energized, tested, and operated. Start-up is completed prior to Functional Performance Tests.

K. Test Requirements: Requirements specifying what systems, modes and functions, etc. must be tested. Test requirements are not detailed test procedures. Test requirements and acceptance criteria are specified in the Contract Documents.

1.04 SUBMITTALS

A. Contractor shall provide the CxA with documentation required for Commissioning work. At minimum, documentation shall include: Detailed Start-up procedures, Full sequences of operation, Operating and Maintenance data, Performance data, Functional Performance Test Procedures, Control Drawings, and details of Owner-Contracted tests.

B. Contractor shall submit other relative documentation for impact on FPT's of the systems to the CxA:

1. Shop Drawings and product submittal data related to systems or equipment to be commissioned. The Subcontractor responsible for the FPT shall review and incorporate comments from the CxA via the AE and Contractor.

2. Draft Electrical Testing Agency (ETA) Reports: Submit to the CxA, AE and Owner.

3. Factory Performance Test Reports: Submit all factory performance testing requirements to the CxA and AE prior to executing the FPTs.

4. Completed equipment Start-up certification forms along with the manufacturer's field or factory performance and Start-up test documentation: incorporate manufacturer's Start-up procedures with Prefunctional checklists prior to commencing with the scheduled FPT's.

5. Final ETA Reports: Subcontractor performing the tests will submit procedures to the CxA, AE, GC and Owner prior to commencing with the scheduled FPT's.

6. Operating and Maintenance (O&M) information per requirements of Division 01 requirements: the Contractor shall ensure that the O&M manual content, marked-up record Drawings and Specifications, component submittal drawings, and other pertinent documents are submitted to the CxA for review.

PART 2 - PRODUCTS

2.01 TEST EQUIPMENT

A. Provide all specialized tools, test equipment and instruments required to execute Start-up, checkout, and testing of equipment.

B. All specialized tools, test equipment, and instruments required to execute Start-up, checkout, and testing of equipment shall be of sufficient quality and accuracy to test and/or measure system performance within specified tolerances. A testing laboratory must have calibrated test equipment within the previous twelve (12) months. Calibration shall be NIST traceable. Contractor must calibrate test equipment and instruments according to manufacturer's recommended intervals and whenever the test equipment is dropped or damaged. Calibration tags must be affixed to the test equipment or certificates readily available.

C. Infrared Thermographic Scanner:

1. Infrared scanning equipment shall be an AGA (or approved equal) thermovision set capable of viewing an entire bus or equipment assembly at one time and have a sensitivity of 0.2 degrees C with a liquid nitrogen reference.

2. All testing equipment shall be of sufficient quality and accuracy to test and/or measure system performance with the tolerances specified.

PART 3 - EXECUTION

3.01 PREPARATION

A. Construction Phase:

1. Attend Commissioning Meetings scheduled by the GC and CxA to facilitate the Commissioning process.

2. Provide requested documentation to the GC and CxA, prior to O&M manual submittals, for development of Prefunctional Checklist and Functional Performance Tests procedures. This will include detailed manufacturer's installation and Start-up, operating, troubleshooting and maintenance procedures, full details of any Owner-contracted tests, full factory testing reports, if any, and full warranty information, including all responsibilities of the Owner to keep the warranty in force clearly identified.

3. During the Start-up and initial checkout process, execute and document related portions of the Prefunctional Checklists for all commissioned equipment.

4. Perform and clearly document all completed Prefunctional Checklists and Start-up procedures. Provide a copy to the GC and CxA prior to the Functional Performance Test.

5. Address current AE and Owner punch list items before Functional Performance Tests. Air and water test, adjust and balance shall be completed with discrepancies and problems remedied before Functional Performance Tests of the respective air or water related systems are executed.

6. Provide skilled technicians to execute starting of equipment and to assist in execution of Functional Performance Tests. Ensure that they are available and present during the agreed-upon schedules and for a sufficient duration to complete the necessary tests, adjustments, and problem solving.

7. Correct deficiencies (differences between specified and observed performance) as interpreted by the AE, CxA, GC and/or Owner. Retest the system and equipment.

8. Compile all Commissioning records and documentation to be included in a Commissioning and Closeout Manual.

9. Prepare O&M manuals according to the Contract Documents, including clarifying and updating the original sequences of operation to as-built conditions.

10. Provide training of the Owner's operating personnel as specified.

11. Coordinate with equipment manufacturers to determine specific requirements to maintain the validity of the warranty.

B. Warranty Phase:

1. Execute seasonal or deferred tests according to the Specifications.

   a. Complete deferred tests as part of this Contract during the Warranty Period. Schedule this activity with Owner. Perform tests and document and correct deficiencies. CxA may observe the tests and review and approve test documentation and deficiency corrections.

   b. If any check or test cannot be completed prior to Substantial Completion due to the building structure, required occupancy condition, or other condition, execution of such test may be delayed to later in the Warranty Period, upon approval of the Owner. Contractor shall reschedule and conduct these unforeseen deferred tests in the same manner as deferred tests.

2. Correct deficiencies and make necessary adjustments to O&M manuals, Commissioning documentation, and as-built drawings for applicable issues identified in any seasonal testing.

C. Electrical Testing Agency (ETA):

1. When requested by Owner, the Contractor shall retain an independent Electrical Testing Agency (ETA). Their specific testing responsibilities are delineated in Section 26 01 00. This generally requires checking and testing of the electrical power distribution equipment per National Electrical Testing Association (NETA).

2. The ETA shall attend Commissioning Meetings, Pre-Installation Meetings, and other Project meetings scheduled by the Contractor to facilitate the Commissioning process.

3. Obtain all required manufacturer's data to facilitate tests.

4. Provide assistance to the CxA in preparation of the specific Prefunctional Checklist and Functional Performance Test procedures. The ETA shall be responsible for the development of their standard forms to document the NETA tests. Submit these test forms to the CxA for Prefunctional Checklist and Functional Performance Test records.

5. During related tests, execute and document the tests in the approved forms and/or test record.

6. Perform and clearly document all completed Start-up and system operational checkout procedures, providing a copy to the Contractor.

7. Clearly indicate any deficiencies identified during testing and add to an action list for resolution and tracking. The field technicians shall keep a running log of events and issues. Submit hand-written reports of discrepancies, deficient or uncompleted work by others, Contract interpretation requests and lists of completed tests to the Contractor. Provide technical assistance in the resolution of deficiencies.

8. Provide skilled technicians to execute testing. Ensure that they are available and present during the agreed-upon schedules and for sufficient duration to complete the necessary tests, adjustments and problem solving.

9. Warranty Phase: Perform thermographic imaging of loaded panel at time designated by EC, GC or Owner.

3.02 TESTING

A. Prefunctional Checklists and Start-up:

1. Follow the Start-up and initial checkout procedures listed in this Section and in Division 01. Start-up and complete systems and sub-systems so they are fully functional, meeting the requirements of the Contract Documents.

2. Prefunctional Checklists shall be complete prior to commencement of a Functional Performance test.

B. Functional Performance Tests:

1. Functional Performance Tests are conducted after system Start-up and checkout is satisfactorily completed.

C. Coordination Between Testing Parties:

1. Factory Start-ups: Factory Start-ups are specified for certain equipment. Factory Start-ups generally are Start-up related activities that will be reviewed and checked prior to Functional Performance Tests. All costs associated with factory Start-ups shall be included with the contract price unless otherwise noted. Notify the Commissioning Team of the factory Start-up schedule and coordinate these factory Start-ups with witnessing parties. The Commissioning Team members may witness these Start-ups at their discretion.

2. Independent Testing Agencies: For systems that specify testing by an independent testing agency, the cost of the test shall be included in the Contract price unless otherwise noted. Testing performed by independent agencies may cover aspects required in the Prefunctional Checklists, Start-ups, and Functional Performance Tests. Coordinate with the independent testing agency so that Owner and/or AE can witness the test to ensure that applicable aspects of the test meet requirements.

3.03 TRAINING

A. Submit a written training plan to the CxA, GC and Owner for review and approval. Contractor's training plan shall cover the following elements:

1. Equipment included in training.

2. Intended audience.

3. Location of training.

4. Objectives.

5. Subjects covered.

6. Duration of training on each subject.

7. Instructor for each subject.

8. Methods (classroom lecture, video, Site walk-through, actual operational demonstrations, written handouts, etc.).

9. Instructors and qualifications.

B. Contractor shall have the following training responsibilities:

1. Provide a training plan in accordance with Division 01.

2. Provide Owner personnel with comprehensive training in the understanding of the systems and the operation and maintenance of each major piece of commissioned electrical equipment or systems.

3. Training shall start with classroom sessions, if necessary, followed by hands-on training on each piece of equipment, which shall illustrate the various modes of operation, including Start-up, shutdown, fire/smoke alarm, power failure, etc.

4. During any demonstration, should the system fail to perform in accordance with the requirements of the O&M manual or sequence of operations, the system will be repaired or adjusted as necessary and the demonstration repeated.

5. The appropriate trade or manufacturer's representative shall provide the instructions on each major piece of equipment. This representative may be the Start-up technician for the piece of equipment, the installing contractor, or manufacturer’s representative. Practical building operating expertise as well as in-depth knowledge of all modes of operation of the specific piece of equipment is required. More than one party may be required to execute the training.

6. The training sessions shall follow the outline in the Table of Contents of the O&M manual and illustrate whenever possible the use of the O&M manuals for reference.

7. Training shall include:

a. Usage of the printed installation, operation and maintenance instruction material included in the O&M manuals.

b. Review of the written O&M instructions emphasizing safe and proper operating requirements, preventative maintenance, special tools needed and spare parts inventory suggestions. The training shall include Start-up, operation in all modes possible, shutdown, seasonal changeover and any emergency procedures.

c. Discussion of relevant health and safety issues and concerns.

d. Discussion of warranties and guarantees.

e. Common troubleshooting problems and solutions.

f. Explanation of information included in the O&M manuals and the location of all plans and manuals in the facility.

g. Discussion of any peculiarities of equipment installation or operation.

8. Hands-on training shall include Start-up, operation in all modes possible, including manual, shutdown, and any emergency procedures and maintenance of all pieces of equipment

9. Training shall occur after Functional Performance Tests are complete and shall be scheduled with the Owner's Project Manager.

3.04 FORMS

A. Prefunctional Checklists

B. Functional Performance Test Checklists

PREFUNCTIONAL CHECKLIST

Switchgear, Panelboards, Motor Control Centers, Transformers

Project: _____ Date:_____

Identification of Equipment or System: _____

Location of Equipment or System: _____

Specification Section: _____ Detail/Drawing Number: _____

Manufacturer / Supplier: _____

Components Included: ____Disconnects____Fuses ____Meters____Other

1. Equipment Verification:

Item	Specified	Submitted	Installed
Manufacturer			
Model Number			
Serial Number			
Service			
Equipment Rating (amps)			
Voltage/Phase			

2. Installation Checks:

a) Unit and General Installation		Yes	No	Comments
1.	Permanent labels affixed			
2.	Physical condition acceptable, no visible damage, cabinets in place			
3.	Properly mounted on equipment pad and anchored			
4.	Maintenance access acceptable			
5.	Interior clean and dry			
6.	Meter(s) installed per Contract Documents			
7.	Disconnects installed and labeled			
8.	Disconnects are pad lockable in open position			
9.	Circuit breakers installed and labeled			
10.	Fuses installed			
11.	Conduits installed and connected			
12.	Cable/conduit routing does not obstruct access			

b) Switchgear (service entrance 1500kVA and above) and Switch-boards (service entrance less than 1500 kVA)		Yes	No	Comments
1.	Free standing metal enclosure			
2.	Cobber buses			
3.	Penetration to utility service area and equipment per code			

c) Distribution Panelboards and other Panelboards		Yes	No	Comments
1.	Tin plated copper buses			
2.	Each circuit identified and labeled			
3.	Space for additional circuits exist			

d) Motor Control Centers		Yes	No	Comments
1.	Tin plated copper buses			
2.	Main breakers installed and labeled			
3.	Each circuit identified and labeled			

e) Transformers		Yes	No	Comments
1.	Dry type installed			
2.	Unit properly labeled and identified			

f) Electrical and Controls		Yes	No	Comments
1.	Panel devices labeled and wiring tagged per Contract Documents			
2.	I/O devices labeled and wiring tagged per Contract Documents			
3.	Digital inputs and outputs operational			
4.	All electrical connections tight			
5.	Proper grounding installed for the electrical system, equipment, components, and unit			
6.	Safeties in place and operable			
7.	Sensors, transmitters, gages, etc., installed			
8.	Sensors calibrated (see below)			
9.	Control system interlocks hooked up and functional			
10.	All control devices and wiring complete			
11.	Lightning protection installed			
12.	Surge protection installed			

g) Final		Yes	No	Comments
1.	Start-up report completed and attached with this Prefunctional Checklist			
2.	Safeties and safe operating ranges for this equipment have been reviewed and accepted			
3.	System is ready for Functional Performance Test			

Operational Checks		Yes	No	Comments
1.	Associated Prefunctional Checklists are complete and accepted			
2.	Fuses are good			
3.	Resistance check(s) complete with results attached			
4.	Disconnect switch operates smoothly with full contact			
5.	Specified point-to-point checks have been completed and documentation record submitted for this system			

PREFUNCTIONAL CHECKLIST

Emergency Power System

Project: _____ Date: _____

Identification of Equipment or System: _____

Location of Equipment or System: _____

Specification Section: _____ Detail/Drawing Number: _____

Manufacturer / Supplier: _____

Components Included:
___ Generator, ___ Fuel System, ___Cooling System, ___Battery System, ___ Exhaust System,
___ ATS, ___ UPS

1. General:
   a. The above systems and components integral to this equipment are complete and ready for Functional Performance Tests. The Prefunctional Checklist items are complete and have been checked off only by parties having direct knowledge of the event, as indicted below, respective to each responsible contractor. This Prefunctional Checklist is submitted for approval and is subject to the attached list of outstanding items not completed successfully. Submit a Deficiency Form upon completion of any outstanding or deficient items. None of the outstanding items preclude safe and reliable functional tests being performed.
   b. This Prefunctional Checklist does not take the place of the manufacturer's recommended checkout and Start-up procedures or report.
   c. Prefunctional Checklist items shall be completed as part of start-up and initial checkout, preparatory to functional testing.

Contractor/Entity	Company	Abbreviation
Architect/Engineer		AE
GC/Construction Manager		GC
Mechanical Contractor		MC
Electrical Contractor		EC
BAS Provider		BAS
Test, Adjust, and Balance Firm		TAB
Commissioning Consultant		CA

2. Equipment Verification:

Item	Specified	Submitted	Installed
Manufacturer			
Model Number			
Serial Number			
Service			
Size/Rating (kW / continuous or standby)			
Fuel Type			
Voltage/Phase			

3. Installation Checks:

a) Unit and General Installation		Yes	No	Comments
1.	Permanent labels affixed			
2.	Physical condition acceptable			
3.	Properly mounted with vibration isolators			
4.	Factory alignment appears correct			
5.	Field alignment complete			
6.	Maintenance access acceptable			
7.	Fuel piping and/or prime mover exhaust system are properly supported (independent of prime mover and/or generator)			
8.	Equipment clean			
9.	Equipment room properly ventilated, air-conditioned, heated, fire/smoke wall separated, fire/smoke dampered, fire sprinklered, fire alarmed and illuminated (normal, emergency and battery backed-up fixtures)			
10.	All equipment properly identified and labeled			

b) Prime Mover		Yes	No	Comments
1.	Unit able to run on diesel fuel or a combination of natural gas and diesel fuel			
2.	Air cleaner and oil filter(s) installed			
3.	Vibration isolators active			
4.	Proper oil type used, with level correct			
5.	Exhaust duct installed with proper insulation and silencer/muffler			
6.	Exhaust system discharges to outside			
7.	Condensables able to be removed from exhaust system and discharged properly			
8.	Combustion and/or ventilation air louvers installed correctly			
9.	Cooling water radiator ducted to inlet louver			

c) Generator		Yes	No	Comments
1.	Bearings lubricated			
2.	Rotor and stator in proper condition			
3.	Voltage regulator installed			
4.	Main breaker installed, rated at full load capacity			
5.	Instrument panel is mounted on unit			
6.	Remote annunciator panel installed			
7.	Generator auxiliary panel (dedicated to generator room equipment/lighting) is installed			

d) Fuel System		Yes	No	Comments
1.	Piping Prefunctional Checklist complete and accepted			
2.	Day tank installed, with electric pump, hand pump, and by-pass piping/valves			
3.	Above ground fuel tank installed, with pump(s)			
4.	Monitoring system installed			

e) Battery Charger and Batteries		Yes	No	Comments
1.	Batteries installed in a nonmetallic rack (wall mounted) adjacent to the prime mover			
2.	Battery electrolyte level is correct			
3.	Automatic trickle battery charger is installed (wall mounted) adjacent to battery bank			

e) Battery Charger and Batteries		Yes	No	Comments
4.	Battery cable connections are tight, terminals are clean			

f) Automatic Transfer Switch		Yes	No	Comments
1.	ATS rated for operation at the same output as the emergency generator, capacity is greater than total system transferred load			
2.	Transferred loads identified at panel, agrees with listed loads			
3.	ATS installation is complete			

g) Electrical and Controls		Yes	No	Comments
1.	Panel devices labeled and wiring tagged per Contract Documents			
2.	Unit mounted instrument panel includes:			
	AC voltmeter			
	Ammeter			
	V-a selector switch			
	Frequency meter			
	Running time meter			
	Voltage adjusting rheostat			
	Exciter overload protection			
	Warning lights and alarms			
3.	Batteries provided with electronic sensing device for remote notification of battery conditions			
4.	I/O devices labeled and wiring tagged per Contract Documents			
5.	Digital inputs and outputs operational			
6.	All electrical connections tight			
7.	Proper grounding installed for the electrical system, equipment, components, and unit			
8.	Safeties in place and operable			
9.	Sensors, transmitters, gages, etc., installed			
10.	Sensors calibrated (see below)			
11.	Control system interlocks hooked up and functional			
12.	All control devices and wiring complete			
13.	Lightning protection installed			

h) Final		Yes	No	Comments
1.	Start-up report completed and attached with this Prefunctional Checklist			
2.	List of items/systems served by the emergency power system is attached			
3.	Fuel tank(s) full			
4.	Safeties and safe operating ranges for this equipment have been reviewed and accepted			
5.	Sequence of operation adequately indicates all information			
6.	System is ready for Functional Performance Test			

4. Operational Checks:

a. These checks supplement the manufacturer's list. This is not the Functional Performance Test.

Operational Checks		Yes	No	Comments
1.	Associated Prefunctional Checklists are complete and accepted			
2.	ATS operates correctly			
3.	Resistance check(s) complete with results attached			
4.	Fuel system operates correctly			
5.	Ignition and battery systems operate correctly			
6.	Cooling system operates correctly			
7.	Specified point-to-point checks have been completed and documentation record submitted for this system			

5. Sensor and/or Actuator Calibration:

a. All field-installed temperature sensors, pressure sensors, meters, and gages, and all actuators and valves on this piece of equipment shall be calibrated. Sensors installed in the unit at the factory with calibration certification provided are not required to be field calibrated.

Sensor/Actuator Verification Table					
Sensor or Actuator	Correct Location (Y/N) (1)	Thermometer or Gage Value	BAS Value (2)	Instrument Measured Value (3)	Pass (Y/N)

1. Thermometer/Gage reading is the reading of the permanently mounted instrument on the equipment.
2. BAS is the Building Automation System. Instrument = testing instrument.
3. ***All sensors are calibrated within required tolerances: ___ YES ___ NO***

FINAL SIGN-OFF

Contractors attest that the above items have been verified and meet the requirements of the Contract Documents except as noted on the attached Deficiency form.

General Contractor:	Print Name:	
	Signature:	
	Title:	
	Date:	
Electrical Subcontractor	Print Name:	
	Signature:	
	Title:	
	Date:	
Other Subcontractor:	Print Name:	
	Signature:	
	Title:	
	Date:	

Prefunctional Checklist received and reviewed for completeness by CxA. Functional Performance Test can proceed.

END OF SECTION

ITS Low Voltage Wiring Specification Standard

Document ID	CS-0001
Effective Date	10/06/2011
Owner	ITS Communications & Security
Info Classification	Internal Information
Page No.	Page 1 of 14

AUDIENCE

- ITS and/or Metro employees
- General Services
- ITS and/or Metro General Contractors, contractors, sub-contractors and vendors.

PURPOSE

This document describes the minimum Metro requirements for all telecommunications wiring for new or remodeled buildings. This specification is to be used by contractors and/or Metro employees whenever premise or in-building telecommunications wiring is needed. If designed and installed properly, the final product will support most high-speed multi-product, multi-vendor environments.

SUMMARY

Items not specifically covered herein will use the appropriate reference documents in the Section **Additional Information, Reference Materials**. It is very important that those who use this specification make sure they have the latest reference material. It should be noted that on occasion, equipment manufacturers and/or system providers might require wiring standards and components beyond those covered herein. When this situation occurs, the cabling plant will be upgraded where necessary, while still maintaining the parameters of this specification. Telecommunication types covered include: telephony, data, and video/RF communications.

This specification will typically support commercial buildings up to 10 million square feet of office space and up to 50,000 individual users. Telecommunications cabling systems specified herein are intended to have a useful life in excess of five years. The specification does not cover active electronic devices such as: switches, hubs, routers, computers, telephones, etc. but rather the wiring to interconnect these devices within a commercial office building.

This specification is based on the latest ANSI/TIA/EIA standards, BICSI practices, and the National Electric Code (NEC). These documents are continuously being revised. The system designer, material suppliers, and installation personal must follow the latest reference materials at time of implementation.

System design activities must be performed by BICSI trained RCDD (Registered Communication Distribution Designer) personnel. All installation activities must be performed by the appropriate BICSI trained Installation Level personnel, and finally that all testing and installation supervision activities must be performed by BICSI trained Technician Level personnel. System testing and acceptance are significant requirements of any building wiring system.

During the installation and testing process, initial documentation of system records is very important. This is a continuous system management process. A well-designed telecommunications wiring system will become a nightmare unless all moves, adds, and changes are properly documented as the system evolves.

If data applications anticipated will require transmission speeds beyond gigabit/s rates, the user should consider installing category 6 cabling or optical fiber to future proof and/or give additional headroom for category 5e systems.

This specification does not address ancillary systems, such as: Public Address, Building Automation, HVAC control, Intercom, and Wireless systems.

All new cable installations must use components manufactured by CommScope. The only exception to this is Howard Office Building which uses components manufactured by Systimax. Additions to existing cable plants must use components to the extent possible. Unused ports on existing patch panels and face plates made by other manufacturers may be used in existing cable plants. Wire management and rack components are required.

Contents

AUDIENCE **1**

PURPOSE **1**

SUMMARY **1**

DETAIL **3**

1.0 HORIZONTAL CABLING 3
2.0 BACKBONE CABLING 4
3.0 WORK AREA 5
4.0 PATHWAYS AND SPACES 6
5.0 GROUNDING AND BONDING 9
6.0 ADMINISTRATION AND TESTING 10
7.0 GENERAL GUIDELINES 13

ADDITIONAL INFORMATION **14**

REVISION HISTORY **14**

DETAIL

1.0 Horizontal Cabling

1.0 General

Horizontal cabling is that portion of the cabling that extends from the WA (work area) outlet to the HC (horizontal cross-connect) in the TR (telecommunications room).

2.0 Topology

Horizontal cabling must be installed in a star topology. Each cable shall be a homerun without splices. Application-specific electrical components (such as impedance matching devices) shall not be installed as part of the horizontal cabling. These components will be added externally to the TO (telecommunications outlet). This facilitates testing and use of the cabling for varied network requirements. Horizontal cabling shall contain no more than one TP (transition point) or CP (consolidation point) between the HC and TO. Taps and/or splitters are not allowed.

3.0 Horizontal Distances

The horizontal distance is the cable length from the mechanical termination at the HC to the TO. The maximum allowed distance is 90 m (295 ft) independent of media type (UTP, coax, fiber, etc.). This allows 10 m (32 ft) for patch cords and equipment cables. If MUTOA (multi-user telecommunications outlet assembly) is used, the maximum distance will be reduced in accordance to paragraph 6.4.1.4 of TIA/EIA-568-B.1.

4.0 Recognized Cables

Types of cables acceptable:

(a) 4-pair 100-ohm UTP (or ScTP as required for specific electrically noisy environments)
(b) 2-fiber 50/125 um MMF
(c) 9 um SMF
(d) 75-ohm RG6 (CATV only)

Cables may be individual cables or in bundled or hybrid formats.

Do **NOT** use 2-pair 150-ohm STP-A cable (or 50-ohm IEEE 802.3 10BASE2 coax) on new installations. Two UTP/ScTP cables shall be configured for each WA location, unless data at the location is designed for optical fiber, then a combination of one 4-pair UTP/ScTP and two MMF will be used. Although the TIA/EIA-568-B.1 standard allows category 3 cable for voice applications, Metro requires that all new or modified systems will have a minimum of 4-pair category 5e cables, unless the WA location is designed for optical fiber. This facilitates testing and allows for future flexibility. 75-ohm Series 6 coaxial cable can be used if required by the system application in addition to the copper/MMF cables. Do NOT use traditional multi-pair (greater than 4-pair) cables, even if they are rated as category 5e, as their performance especially in mixed systems cannot be predicted.

Copper conductors shall be solid 24 AWG meeting all requirements of TIA/EIA-568-B.2.

If using ScTP cables, the shield shall be bonded through a conducting path to the TGB (telecommunications grounding buss bar) in the TR. When using ScTP cables, the entire system must support that conducting path end-to-end. Acceptable voltage measurement between the WA TO shield and the ground wire at the electrical outlet supplying power to the workstation is less than 1.0 Vrms.

The minimum bend radius, under no-load conditions, for 4-pair UTP cable shall be four (4) times the cable diameter, eight (8) times for 4-pair ScTP cable, and ten (10) times for multi-pair cable. Maximum pulling tension for 4-pair UTP cable is 110 N (25 lbf), use manufacturer's guidelines for other cable types.

5.0 Jacket Color Coding

Use the following overall jacket colors to identify cable use:

Blue – Cat5e
Purple – Cat6
Black - RF/Video-RG6
Orange – Multi-mode Optical Fiber – 62.5 micron
Aqua – Multi-mode Optical Fiber – 50 micron
Yellow – Single-mode Optical Fiber

*Exceptions must be approved by Metro ITS.

2.0 Backbone Cabling

2.1 General

The function of the backbone cabling is to provide interconnection between the HC and IC (intermediate cross-connects)/MC (main cross-connects) located in the ER (equipment room) or at the EF (entrance facility). Metro ITS will determine copper and fiber requirements.

Copper splices are only allowed in backbone cabling if designed by and/or approved by Metro IT. Building to building must have lightening protection and grounding on both ends and labeled.

2.2 Topology

The backbone cabling shall use hierarchical star topology wherein each HC in a TR is either cabled directly to a MC or to an IC then a MC. There shall be no more than two levels of cross-connects in the backbone cabling.

Non-star configurations (such as ring, bus, or tree) will be accommodated through appropriate interconnections, electronics, or adapters in the TR, not within the backbone cabling.

2.3 Recognized Cables

See **Section 6.2.4.**

2.4 Backbone Cabling Distances

In large installations the MC location should be as centrally located as possible to minimize cabling distances.

The total distance is part of the maximum horizontal distance of 90 m (295 ft) independent of media type (UTP, coax, fiber, etc.) for proper performance. Maximum distance for optical fiber backbones is dependent on: application, wavelength of light, fiber type (single-mode or multimode and core size), and link budget. Refer to TIA/EIA-568-B.2 Annex E for guidelines.

3.0 Work Area

3.1 General

Work area components include the TO and equipment cables at the user's work station. They are not limited to numbers or types of devices (telephones, modems, faxes, computers, data terminals, etc.).

3.2 Cat 5e Outlet/Connector (100-ohm Balanced Twisted-Pair Connectors)

Each 4-pair cable shall be terminated in an 8-position modular category 5e jack of either UTP or ScTP type to match the installed cable type (angled is preferred, flat or straight is acceptable). Pin/pair assignments shall follow the T568B convention.

3.3 Optical Fiber Connectors

Horizontal optical fibers to the work area will terminate into a SFF (small form factor) duplex outlet/connector of LC design (EIA/TIA-604-10). While there are many non-compatible SFF connector styles used by the telecommunications industry, LC is widely used and very compact. If previous applications have used duplex 568SC or simplex ST/SC connectors, they shall be accommodated by factory-made LC jumper/adapters with the appropriate connector style on one end.

3.4 Faceplates

Use of faceplates is to accommodate the T568B and MT-RJ connectors terminating UTP/ScTP copper and optical fiber cables. The individual components and work area system must be manufactured and compliant with CommScope or approved by written Metro ITS policy.

Wall - Each single wall faceplate must be, at minimum, a quad modular connector style. Color will be decided prior to installation.

Cubicle - Each cubicle faceplate must be, at minimum, a tri-modular connector style, black in color. Style based on furniture manufacturer.

Any unused positions will be covered by blank inserts.
*Note – Biscuit jacks will not be allowed.

3.5 Work Station Patch Cords

Work station patch cords are used to connect the TO to the user equipment. All patch cords will be 4-pair UTP/ScTP category 5e cords terminated with T568B connectors. Maximum length is 5 m (16 ft). Where communication devices are located farther away, it will be required to move the TO closer to the user equipment. Except for temporary emergency repairs only factory terminated and tested modular cords are allowed. All patch cords will use UTP/ScTP 24 AWG stranded wire. Black color is to be used at desktop/work area (non-booted).

3.6 Communication Room Patch Cords

All patch cords will be 4-pair UTP/ScTP category 5e cords terminated with T568B connectors. Patch cords will be color coded blue (non-booted).
Life Safety patch cords will be red.

3.7 MUTOA (Multi-User Telecommunications Outlet Assembly)

Open office spaces (modular furniture) require special considerations. The distribution point is called a MUTOA (multi-user telecommunications outlet assembly). It is fed from the HC with horizontal cables to central locations within a furniture cluster. Work area cables are then routed through furniture pathways up to a maximum of twelve (12) work areas.

No surface mount outlets will be accepted. AT&T or equivalent black snap-in faceplate is to be used.

If electrical and cat5e cables share a power pole in a modular environment they must have a separate channel.

3.8 Optical Fiber Links

For optical fiber cables, extending the lengths of work area cables to reach a MUTOA does not require reduction of the total channel length allowance of 100 m (328 ft).

4.0 Pathways and Spaces

4.1 General

This section covers horizontal pathways, intra-building pathways, TR (telecommunications rooms), ER (equipment rooms), EF (entrance facility), and fire stopping. The telecommunications industry has changed the terminology from TC (telecommunications closet) to TR (telecommunications room) to better reflect the real needs of this component.

The primary function of the TR is termination and cross-connection of horizontal and backbone cables. The primary function of the EF is demarcation from service providers and customer premises cabling. The primary function of the ER is a controlled environment to house telecommunications equipment. These may be separate rooms/facilities or combined together.

4.2 Horizontal and Backbone Pathways

The primary means of supporting or protecting cable in horizontal pathways is either conduit, trays, in ceiling or any combination of these and may include pull boxes.

Conduit should be used through floor sleeves, ground wire protection, in-wall stub-ups for outlets, or as required by local codes. Maximum length of conduit shall be 30 m (100 ft) between pull boxes. No section of conduit shall have more than 180 degrees of bend between pull boxes. The inside bend of conduit shall be at least six (6) times its internal diameter. Any conduit run can serve no more than three (3) outlets. Conduit sizing guidelines can be found in ANSI/TIA/EIA-569-A Table 4.4-1. Workstation conduit must be a minimum of 3/4". Pull string or rope with distance marking shall be placed in all conduits before and after cables are pulled. Pull boxes shall not be used for splicing or terminating cables. Pull boxes shall be readily accessible. Pull box length for straight pulls shall be at least eight (8) times the trade-size diameter of the largest conduit. Pull box size for angled pulls shall be six (6) times the largest conduit plus the sum of all other conduits entering that wall. Pull box sizing guidelines can be found in ANSI/TIA/EIA-569-A Table 5.2-2. Label all conduits are per ANSI/TIA/EIA-606-A immediately after installation.

Cable trays are required in all horizontal pathways in office buildings/space over 20,000 sq. ft. A minimum of 300 mm (12") of headroom shall be provided and maintained above the cable tray. Cable tray dimensions should be a minimum 12" W x 2" H. Conduit/Innerduct is required for fiber optic cable used in horizontal pathways. Conduit/Innerduct will only contain fiber optic cable and never be intermixed with copper cables. Final pathway design must be approved by ITS.

Ceiling pathways shall follow NEC and Nashville Metro codes.

Perimeter pathways in modular/fixed furniture may be used of either metallic or plastic materials as long as they are designed for category 5e and if used with power have appropriate divider to separate power and communications.

Under carpet pathways and cabling system are not allowed.

Where inter-floor sleeves are required for communications cables there shall be one (1) sleeve for every 5000 m^2 (50,000 ft^2) of usable floor space served by the backbone of 103 (4) trade size, plus two (2) spares.

Specific application of specialty types of pathways and spaces are covered in addendums to TIA/EIA-569-A covering surface raceways, furniture, access floors, poke-thru fittings, and in-floor systems. Size of pathways will be determined by quantity, size, and bend radius of cables to meet category 5e requirements with allowance for growth of at least 50%. Horizontal pathways may not be installed in elevator shafts or locations that contain water as defined by NEC Article 100 such as on concrete slabs.

4.3 Telecommunications Room (IDF)

A telecommunications room TR (or IDF) shall be located on each floor as close as practical to the center of the floor space and preferably in the core area. Additional TRs shall be provided when the floor area being served exceeds 1000 m^2 (10,000 ft^2) or the horizontal distribution distance to the WA exceeds 90 m (295 ft). The TR shall be dedicated to the telecommunications function and related support facilities and not shared with electrical or HVAC installations nor shall water pipes, ductwork, pneumatic tubing, etc. pass through the TR. Water pipes and/or water sources shall not pass over the ER. Multiple TRs on a floor shall be interconnected by a minimum of one (1) conduit 78 (3) trade size or equivalent pathway. Based on one (1) WA per 10 m^2 (100 ft^2), the minimum acceptable TR is 10' x 10' for a serving area of 10,000 ft^2. Smaller TRs must be approved by Metro ITS.

Lighting, lighting fixtures, ceilings, doors, floors, walls, and power will installed per BICSI guidelines for telecommunications spaces. A minimum of two (2) walls should be covered with rigidly fixed 20 mm (3/4 in) A-C void-free, unpainted, fire-rated plywood, 3000 mm (10 ft.) high. A proximity card reader is required for each telecommunication room. A minimum of two (2) dedicated 120 VAC 20A non-switched AC duplex electrical outlet receptacles, each on a separate branch circuit with a dedicated neutral, shall be provided for equipment. In addition, convenience duplex outlets shall be placed at 1.8 m (6 ft.) intervals around the perimeter walls, at a height determined by Metro codes department. A ground bar must be provided with the ground wire (#6) running back to the electrical supply box that provides the dedicated circuits (please see Section 5). Fire protection for the TR shall be provided as per local codes. If sprinkler heads are required by local codes, they shall be provided with wire cages to prevent accidental operation. The temperature and humidity shall be controlled based on the ranges stated in the BICSI guidelines.

4.4 Equipment Room (MDF)

The equipment room ER (or MDF) is a centralized space for telecommunications equipment such as PBX, computer servers and video switches. The ER and TR can be the same room. Avoid areas that limit expansion such as elevators, core, outside walls, or other fixed building walls. The ER shall be accessible for delivery of large equipment. The ER shall be sized to accommodate known and future equipment requirements. If serving area is unknown, provide at least (100 ft^2) or 10' x 10' for the proposed serving area. Environmental control equipment, such as power distribution or conditioner systems, and UPS up to 50 kVA shall be permitted in the ER, but will be approved by Metro ITS. The ER shall be dedicated to the telecommunications function and related support facilities and not shared with electrical or HVAC installations nor shall water pipes, ductwork, pneumatic tubing, etc. pass through the ER. Water pipes and/or water sources shall not pass over the ER. Power shall be provided on a separate circuit terminated in its own electrical panel from a standby source if available. Capacity will be dependent on the installed equipment.

Lighting, lighting fixtures, ceilings, doors, floors, walls, and power will installed per BICSI guidelines for telecommunications spaces. A minimum of two (2) walls should be covered with rigidly fixed 20 mm (3/4 in) A-C void-free, unpainted, fire-rated plywood, 3000 mm (10 ft.) high. A proximity card reader is required for each telecommunication room. A minimum of two (2) dedicated 120 VAC 20A non-switched AC duplex electrical outlet receptacles, each on a separate branch circuit with a dedicated neutral, shall be provided for equipment. In addition, convenience duplex outlets shall be placed at 1.8 m (6 ft.) intervals around the perimeter walls, at a height determined by Metro codes department. A ground bar must be provided with the ground wire (#6)

running back to the electrical supply box that provides the dedicated circuits (please see Section 5). Metro Fire protection for the TR shall be provided as per local codes. If sprinkler heads are required by local codes, they shall be provided with wire cages to prevent accidental operation. The temperature and humidity shall be controlled based on the ranges stated in the BICSI guidelines.

In addition there shall be main terminal space within the ER as shown below:

Gross Floor Space Served		Wall Length		Floor Space Dimensions	
m^2	ft^2	Mm	in	Mm	ft
<=2000	20,000	1060	42	3660 x 2750	10 x 10.0
4000	40,000	1725	68	3660 x 3970	12 x 13.0
5000	50,000	2295	90	3660 x 4775	12 x 15.5
6000	60,000	2400	96	3660 x 5600	12 x 18.5
8000	80,000	3015	120	3660 x 6810	12 x 22.5
10000	100,000	3630	144	3660 x 8440	12 x 27.5

4.5 Entrance Facility (POE)

The entrance facility EF consists of the telecommunications service entrance to the building. All carriers and telecommunications providers involved in providing services to the building shall be contacted to establish their requirements. The actual building entry should avoid other utilities (electrical, water, gas, and sewer). Alternate redundant entrance facilities should be considered where security or continuity of service is important. A minimum of three 103 (4”) trade size conduits for large multi-pair telephone cables, optical fiber, and/or CATV cables should be provided. These should be tilled slightly upward as they enter the building to prevent water ingress. Innerduct may be required based on design of the building. The design of the entrance facility must be reviewed and approved by ITS. All conduits must be labeled and have a pull string.

4.6 Fire stopping

Fire stopping is required based on Metro code. It should be emphasized that the installer (personnel and organization) are liable both financially and criminally for failure to follow proper fire stopping procedures.

New Construction – responsibility of the General Contractor
Existing Construction – if vendor uses any wiring path (conduit, core drill, etc.), then vendor must reseal or replace firestop material

5.0 Grounding and Bonding

5.1 The grounding and bonding specification is derived from a combination of the NFPA NEC Article 250 and Chapter 8 and TIA/EIA-607.

The components that make up the grounding infrastructure include:

Grounding electrode system (ground rod)
Grounding electrode conductor

Bonding Conductor for Telecommunications
Telecommunications Bonding Backbone (TBB)
Telecommunications Main Grounding Busbar (TMGB)
Telecommunications Grounding Busbar (TGB)
TBB Interconnecting Bonding Conductor (TBBIBC)

Bonding refers to the permanent joining of metallic parts. This can be accomplished either by an exothermic weld or by irreversible two-hole compression connectors. Non-bonded grounding connections only require an irreversible one-hole compression or screw/bolt connector. The minimum gauge of wire is 6 AWG, but can get as large as 3/0 AWG.

Ancillary telecommunications components that shall be grounded include the demarcation circuit protectors (with UL497 primary protectors), all racks, cable trays, conduits and ScTP components.

6.0 Administration and Testing

6.1 General

Administration is the method for labeling, identification, and documentation during initial installation and as needed to implement moves, additions, and changes of the telecommunication infrastructure.

6.2 Component Identification and Cable Numbering

The following system of component labeling shall be used:

BBB - Building location Identifier – 3 alphabetic characters

FF - Floor # 00 to 99 – 1 or 2 numeric characters
(Note: All floors below street level 1st floor will be 00)

T – Telecommunication Room Designation – 1 alphabetic character (A to Z)

R – Rack or Terminal Block Section - 1 numeric character (1 to 9)
(Note: Data centers will use a grid system to denote location)

P – Patch Panel or Terminal Block – 1 or 2 alphabetic characters (A to ZZ)

XX – Cable Number – 2 numeric characters (01 to 99)

When cables terminate in a multi-slot equipment chassis, the cable number will be expanded to denote slot and port in the format SS.XX.

SS - Slot Number – 1 or 2 numeric characters

All TRs will be labeled with the FFT designation to indicate floor number and TR number. Racks or wall-mounted terminal block sections or shelves will be identified with the FFTR designation. Patch panels and/or terminal blocks will be identified with the FFTRP designation from top to bottom. Cables will be identified with the entire seven (7) character designation FFTRPXX. Examples follow:

HOB-15B – 2nd communications room on 15th floor at Howard Office Bldg

HOB-15B9 – 9th rack in 2nd TR on 15th floor at Howard Office Building

15B9G – patch panel in 7th position of 9th rack in 2nd TR on 15th fl

15B9G67 – 67th cable, patch panel 7th position of 9th rack in 2nd TR on 15th fl

Note: Building designation is implied information, and therefore optional, on panel and cable designations.

Panel designations will be 1.75 inches (1U) in height. The panel in the highest position will be designated "A", with subsequently lower panels designated "B", "C", "D", "Z", then "AA", "AB", "AC", etc. in 1.75" increments. Upon installation in a rack, the position of the top edge will determine its designation letter. Panel positions must be clearly labeled on both the right and left side (front only) upon rack installation.

All designations and labels will be computer generated (no hand written labels). Cables will be labeled in at least three (3) places: on the cable behind the faceplate, on the faceplate outlet front, and on the cable entering the patch panel jack or terminal block. All labels will be white background with black letters.

Designations and labels must be made of polyester (mylar) material and be capable of maintaining adhesion at a temperature equal to 200 degrees Fahrenheit. Cable labels must be self-laminating. Label content must meet the following specifications:

Rack labels must have a 3/8 inch minimum character height. Label must be affixed to the front of the rack at the highest possible location.

Panel labels must have a ¼ inch minimum character height and be affixed to the front of the panel in a location that is not obstructed by cables or wire management devices.
Wall plate labels must have a ¼" minimum character height and be affixed to the most suitable location on the face of wall plate. As indicated previously, a self-laminating label containing the same information as the face of the wall plate will be affixed to the cable jacket within four inches of termination point.

Patch Cord labels must be self-laminating, have a ¼" minimum character height, and be affixed to the most suitable location within 4" of each connector. Patch cords must be labeled at both ends with the 7 digit identifier of each endpoint using the following format: FFTRPXX | FFTRPXX (identifiers may appear on separate lines). Patch cords for which both ends terminate in the same TR, the identifier can be abbreviated to RPXX | RPXX

Based on examples within TIA/EIA-606 a complete set of records documenting initial installation and changes to it. The records should include the test results, what is installed, where it is installed (description and floor plan location), and a basic block diagram. These records should include the personnel, dates, building name and/or

street address, and ambient conditions. A copy of all test data, change control forms, Wiring Standards (this document), and blank labels of various sizes, must remain in the TR.

Conduit and vault labeling must follow TIA/EIA-606 standards and approved by Metro ITS.

6.3 Field Testing

Transmission performance depends on cable characteristics, connecting hardware, patch cords and cross-connect wiring, the total number of connections, and observing installation practices. Field testing gives a pass/fail indication of the installed system. All category 5e systems shall be tested and the results submitted for system acceptance for each 4-pair UTP/ScTP link. Test results shall also include the site information, cable number under test, and environmental conditions. Only permanent link testing will be required. It should be noted that permanent link testing is different than basic link testing in that it excludes test cables through software in the test instrument. Test instruments shall be field calibrated before testing begins and whenever a break from testing of over an hour occurs. The test instrument must be adjusted to the NVP of the particular manufacturer's installed cable type. Factory calibration and certification is required at least once every year. Acceptance testing will not be approved using test instruments with expired calibration certifications. Even though the complete channel testing, which includes the permanent link portion as well as work area and equipment cords, effects system performance, it is understood that the work area and equipment cords will not be installed at time of system acceptance and may not be supplied by the installer. Additional channel testing may be required when work area and equipment cords are installed. All system testing is performed without signals on the cabling plant. Testing shall be performed by a BICSI certified Technician Level installer. An acceptable test instrument would be a Level IIe certification tester than can print a hardcopy or send the test results to a computer/disc. All tests except wire map, length, and propagation delay will be sweep tested from 1 MHz to 100 MHz. Only the 100 MHz expected results are shown below.

The following test parameters (at ambient temperature of 20 degrees Celsius) are required of each category 5e link:

Test Parameter	Results
Wire map	All 8 conductors terminated on the proper T568B2 pins
Length	Max of 90 m (295 ft) – NVP adjusted for cable type
Insertion loss	Maximum of 21.0 dB at 100 MHz
NEXT loss	Maximum of 32.3 dB at 100 MHz (worst case)
PSNEXT loss	Maximum of 29.3 dB at 100 MHz
ELFEXT	Maximum of 18.6 dB at 100 MHz (worst case)
PSELFEXT	Maximum of 15.6 dB at 100 MHz
Return loss	Maximum of 12.0 dB at 100 MHz
Propagation delay	Maximum of 498 ns at 10 MHz
Delay skew	Maximum of 44 ns (worst case, pair-to-pair)

The only field test for optical fiber is link attenuation. Horizontal and centralized optical fiber cabling links need only be tested at one wavelength 850 or 1300 nm for multimode fiber in one direction for acceptance testing,

however if lack-of-performance indicates, testing in both directions and both wavelengths may be necessary. Horizontal testing will be in accordance with ANSI/TIA/EIA-526-14-A, Method B, One Reference Jumper.

Type of Installation	Results
Horizontal	Less than 2.0 dB - 90 m (295 ft)
Open office w/CP	Less than 2.75 dB - 90 m (295 ft)
Open office w/MUTOA	Less than 2.0 dB - 90 m (295 ft)
Centralized	Less than 3.3 dB - 300 m (984 ft)
Centralized w/CP	Less than 4.1 dB - 300 m (984 ft)

Backbone single-mode optical fiber testing shall be performed at both 1310 and 1550 nm in one direction in accordance with ANSI/TIA/EIA-526-7, Method A.1, One Reference Jumper. Backbone multimode optical fiber testing shall be performed at both 850 and 1300 nm in accordance with ANSI/TIA/EIA-526-14A, Method B, One Reference Jumper. Due to the backbone length and number of splices use the following equation to calculate the expected link attenuation:

Link attenuation = Cable attenuation + connector insertion loss + splice insertion loss

Where: Cable attenuation (dB) = Attenuation coefficient (dB/km) x Length (km)

Attenuation coefficients are: 3.5 dB/km @ 850 nm for multimode
1.5 dB/km @ 1300 nm for multimode
1.0 dB/km @ 1310/1550 nm for single-mode

Connector insertion loss (dB) = 0.75 dB per connector pair

Splice insertion loss (dB) = 0.3 dB per splice

7.0 General Guidelines

7.1 Placement of Cables

Cables and components shall be visually inspected for proper installation. Cable stress such as tension in suspended cables or tightly cinched bundles should be minimized. Cable ties used to bundle cables should be applied loosely (hand tight) to allow the cable tie to slide around the cable bundle. Cable sheath shall not be deformed either by ties or placement. Velcro hook and loop cable ties or ISO 9000 complaint lightweight twine may be used.

7.2 UTP/ScTP Cables

Cables shall be terminated with category 5e (or higher) connecting hardware. This includes: impact terminal blocks, patch panels and cords, and cross-connect jumpers.

To maintain cable geometry, remove only as much cable sheath as necessary to terminate the cable pairs as per manufacturer instructions. Category 5e cable pair twists shall be maintained to within 13 mm (0.5 in) from the point of termination (category 3 twists shall be within 75 mm (3 in).

Whenever service loops for extra cable slack is desired, UTP/ScTP cable shall be loosely coiled into figure eight's to prevent degradation of return loss and NEXT performance.

ADDITIONAL INFORMATION

Reference Materials

TIA/EIA-526- Standard Test Procedures for Fiber Optic Systems

TIA/EIA-568-Commercial Building Telecommunications Cabling Standards

TIA/EIA-569-Commercial Building Standard for Telecommunications Pathways and Spaces

TIA/EIA-598-Optical Fiber Cable Color Coding

TIA/EIA-606 Administration Standard for the Telecommunications Infrastructure of Commercial Buildings

TIA/EIA-607 Commercial Building Grounding and Bonding Requirements for Telecommunications

BICSI Telecommunications Distribution Methods Manual (TDMM)

NFPA 70 Code, National Electrical Code (NEC)

REVISION HISTORY

REVISION	DATE	CHANGES
1.0	09/24/2007	New standard drafted
1.1	09/02/2009	Update of standard
1.2	09/10/2009	Add- Voice Patch Cord
2.0	10/06/2011	Entire redraft of document. Revised to use ITS standard format.

Requirements for UPS, ATS, TVSS, and Generators

UPS – Uninterruptable Power System:

1. Must be purchased from Metro's contract UPS vendor.

2. Must have an External Maintenance Bypass for all units 10kVA or larger.

3. Must have a remote Enunciator Panel for all units 10kVA or larger.

4. Must have a SNMP Communication Card.

5. All voltage transformation must be done external to the UPS. The transformers should not be located in the IT equipment rooms. Exceptions to this must be approved by Metro.

6. The input Wiring, Breakers, and Transformer should be sized to handle the maximum UPS capacity, (e.g. a 225kVA that is brought in at the startup 150kVA level should have the above sized for the 225kVA).

7. The room where the UPS is installed must have a controlled climate meeting the manufacturer's requirements.

8. The room where the UPS is installed must allow for the required service access areas.

9. The UPS, ATS, and Generator must be coordinated to ensure a transfer to generator if the UPS can no longer use the utility power because of its quality or quantity.

TVSS – Transient Voltage Surge Suppressor:

1. TVSS devices should be external to allow for replacement without requiring a complete panel outage.

2. There must be a TVSS installed on the Main Panel feeding utility power into the building.

3. There must be a TVSS installed on the ATS.

4. There must be a TVSS installed on the panel the feeds the UPS.

5. All TVSS devices must have enunciator lights indicating that all phases are protected.

ATS – Automatic Transfer Switch:

1. Must have the capability of programmed Engine Exercise Routines, both with and without load. Metro may require more runs with load, but our Minimum Standard for this is as follows:

- Once a week for the first three weeks of the month, start and run for 1 minute with No Load, and then run for a 5 minute cool-down period.
- Once a month, start and run for 1 hour With Load, and then run for a 5 minute cool-down period.

2. The ATS must have an appropriate sized External TVSS.

3. The ATS should not be fed directly from the utility line. There must be a Main Panel breaker / Service Disconnect.

4. The ATS must have an operator panel / screen for programming.

5. The ATS must have password protection capability.

6. The ATS must have indicators as to the active power source.

7. The ATS must have an “Immediate Transfer” switch that will start the generator and transfer the load.

Generator:

1. Must have a Remote Enunciator Panel, the placement to be decided by Metro.

2. The Fuel Oil must be a Winter Blend.

3. The fuel capacity should provide for 12 hours run time at 80% load.

4. The initial load should be not less than 20% or more than 70%. Exceptions to this require Metro’s approval.

Standard Operating Procedure

Low voltage cabling in new construction or building re-model projects

This document identifies the guidelines for General Services (GS), Metro ITS, architects, and general contractors for design, procurement, and installation of low voltage cabling and Metro ITS telecommunications rooms. These guidelines are to be used for all new construction and substantial building remodeling projects. Any situation or project not covered in this SOP should be submitted to Metro ITS for interpretation.

I. **Project Type 1** – General Services has obtained an architect to design a new Metro facility. Construction documents are then submitted to numerous general contractors for proposals.
   a. Schematic Design Phase
      i. Metro ITS project manager will provide architect with a copy of the Metro ITS Low Voltage Specification Standards. If architect prefers to convert these standards to a new format (i.e. Division 27) then Metro ITS must review before final document is released for bid.
      ii. Metro ITS will work with General Services' representative and architect for ITS telecommunications room(s) size and location.
   b. Design Development Phase
      i. The preliminary locations of low voltage outlets should be obtained by the architect. Then, Metro ITS will review and adjust as needed.
      ii. Metro ITS project manager should identify all needed electrical, UPS, and HVAC requirements for the Metro ITS closets. (supported by Metro ITS Low Voltage Specification Standards)
   c. Construction Document Phase
      i. Metro ITS will provide a Low Voltage Wiring Request package with a list of approved certified CommScope Uniprise vendors to architect to include in final CDs.
      ii. Architect should note, in overall bid-package, that General Contractor may utilize any vendor to "price" low voltage package, but low voltage vendor will <u>NOT</u> be awarded until general contractor, General Services, and Metro ITS complete LV bid process (see section "e").
   d. Procurement – Contractor for overall construction project is awarded.
   e. Construction Administration
      i. Awarded general contractor, General Services, and Metro ITS agree on schedule (timeline) to submit Low Voltage Request to vendors.

ii. Metro ITS will conduct final update/review of the Low Voltage Wiring Request. Then, Metro ITS submits the low voltage wiring request to general contractor for bidding to Metro approved low voltage vendors.
iii. General contractor will manage bidding process (i.e. meetings, bidder's conferences, questions, etc.)
iv. General contractor will review final low voltage proposals with General Services and Metro ITS before low voltage contract is awarded.
v. Awarded low voltage contractor will be managed and contractually obligated to the general contractor. Any changes, requests, etc. from Metro ITS will be submitted to GS / general contractor.
vi. Metro ITS low voltage vendors may be aligned as a subcontractor of the general contractor or the electrical subcontractor.

II. **Project Type 2** – General Services has submitted a request to qualified bidders to design AND build a new Metro facility.

a. Pre-bidding Phase
   i. Metro ITS will provide General Services with Low Voltage Specification Standards and the list of approved certified CommScope Uniprise vendors.
   ii. General Services should note, in overall bid-package, that general contractor or architect may utilize any vendor to "price" low voltage package, but low voltage vendor will NOT be awarded until a later date.
   iii. General Services should consult with Metro ITS if a RCDD (Registered Cable Distribution Designers) should be included in bid.
b. Architect or general contractor for overall project is awarded.
c. Schematic Design Phase
   i. Awarded architect or general contractor, General Services, and Metro ITS agree on schedule (timeline) to submit low voltage request to vendors.
   ii. Metro ITS will work with General Services representative and architect for ITS telecommunication room(s) size and location.
d. Design Development Phase
   i. The preliminary locations of low voltage outlets should be obtained by architect. Then, Metro ITS will review and adjust as needed.
   ii. Metro ITS project manager should identify all needed electrical, UPS, and HVAC requirements for the Metro ITS closets. (supported by Metro ITS Low Voltage Specification Standards)
e. Construction Document Phase
   i. Metro ITS provides a preliminary Low Voltage Wiring Request package to architect to include in final CDs.
f. Construction Administration
   i. Metro ITS conducts final update/review of the Low Voltage Wiring Request. Then, Metro ITS submits the Low Voltage Wiring Request to general contractor for bidding to Metro approved low voltage vendors.

ii. General contractor will manage bidding process (i.e. meetings, bidder's conferences, questions, etc.)
iii. General contractor will review final low voltage proposals with General Services and Metro ITS before low voltage contract is awarded.
iv. Awarded low voltage contractor will be managed and contractually obligated to the general contractor. Any changes, requests, etc. from Metro ITS will be submitted to GS / general contractor.
v. Metro ITS low voltage vendors may be aligned as a subcontractor of the general contractor or the electrical subcontractor.

Inside Outside Wiring Contractors for ITS ONLY

Contractors Name	Contact Person	Vendor #	Contract#	Office Phone	Fax	Cell Phone	E-mail
Stansell Electric	Cheri Viar	214574	335701	369-4123	320-5236	542-6178	cviar@stansellelectric.com
	Tom Bennett			369-4122	320-5236	512-9770	tbennett@stansellelectric.com
Alternate	Mike Wooten			369-4116	642-9581	394-5136	mwooten@stansellelectric.com
	Jeff Brown			369-4127	574-8270		jbrown@stansellelectric.com
Day-to-day	Tracey Bratcher			369-4137	642-9581		tbratcher@stansellelectric.com
Pro Systems	Josh Cooper	174059	335703	259-2185	726-1417	948-1906	jcooper@prosystemsinc.net
Alternate	Mark Smith			259-2185		948-2033	msmith@prosystemsinc.net
	James Mason			259-2185		948-7248	jmason@prosystemsinc.net
Beacon	Billy Quinn	174059	335705	724-2307	301-5023	484-9595	bquinn@beacontech.net
Alternate	Lloyd Whipple			301-5020	301-5023	516-1132	lwhipple@beacontech.net

DIVISION 28 – ELECTRONIC SAFETY AND SECURITY

1. GENERAL DESIGN INTENT

    a. This facility is to be equipped with an automatic electronic access, security, and fire alarm systems that are compatible and pre-approved by Metro General Services. These described systems must communicate with the existing central site in all areas for monitoring purposes. and meet all governing codes. GS is very specific as to the requirements of these systems and all criteria must be met with their approval. These systems are to complete, operable, communicate, and tested for conformance. The following comments contain the basic concepts for this equipment and if the complete specifications can be provided upon request.

2. SECURITY SYSTEM: Consult Metro General Services Security Section requirements for area security systems must be discussed at the initial planning conference and are to be included within the design for prior approval.

    a. MINIMUM REQUIRED INFRASTRUCTURE for LIFE SAFETY SYSTEM: Provide an Access Control and Alarm Monitoring Systems (ACAMS) compatible with the existing central control system and provide a fully addressable Fire Alarm System as per NFPA 13 for Life Safety that is able to communicate with the Central control system.
        i. Emergency Generator auxiliary points to be monitored shall include:
            1. Emergency Generator Is Running Alarm.
            2. Provide 12-VDC lead-acid battery for 4-hour backup for local controller and local module operation

    b. Door hardware operation shall remain exclusively on commercial power, and shall 'not' be battery backed-up. Door hardware shall be configured to close and lock upon loss of commercial power, unless rated as a fire door, which will then be required to latch but remain unlocked upon loss of commercial power

    c. MONITORING CONTACTS: Door monitoring contacts, and wiring and conduits thereto, shall be concealed and invisible when the door is closed. Externally applied door monitoring contacts, externally applied conduit or wiremold, and wire without conduit are prohibited.

    d. AUXILARY POINTS to be MONITORED / ALARMED: Provide monitoring and alarming of the following minimum auxiliary points, including:

        i. ACAMS system auxiliary points to be monitored:

            1. Door Tamper Switches from any-and-all enclosures for ACAMS controllers, ACAMS modules,

            2. Power Failure Status, for Commercial 120-VAC power, from any-and-all power supplies for ACAMS controllers.

            3. Power Failure Status or Low-Battery Status, for 12-VDC, Lead-acid Battery Backup, from any-and-all power supplies for ACAMS controllers, and ACAMS modules

ii. Fire Alarm system auxiliary points to be monitored:

1. Fire Alarm (Detection) System Common Alarm
2. Fire Alarm (Detection) System Common Trouble Signal
3. Fire Alarm (Detection) System Common Supervisory Signal
4. Fire Suppression System Common Alarm
5. Fire Suppression System Common Trouble Signal

iii. Building Automation System auxiliary points to be monitored:

1. HVAC system Common Loss-of-Heat Alarm.
2. HVAC system Common Loss-of-Cooling Alarm.
3. HVAC system Common Loss-of-Critical-Environments Alarm (if any critical environments apply).

iv. Emergency Generator points to be monitored: It is important to never exceed 500-hours run time on any emergency generator within any 12-month period, to minimize operating hours, maximize generator life, and to avoid additional EPA permits for the generator.

1. Emergency Generator Is Running Alarm.

v. All communications wiring between the Intelligent System Controller and all downstream modules, shall be specified and provided consistent with all requirements of MGS's specifications, 'and' consistent with all requirements of the manufacturers. All communications on the ACAMS system using RS-485 communications protocol must use 2-pair twisted/shielded wiring, Belden #9842 or Belden equivalent.

vi. All power wiring, and all control wiring to-and-from controllers, modules, readers, powered latches, etc., shall be specified and provided consistent with all requirements of all sections of Division 26 specifications, 'and' consistent with all requirements of the manufacturers.

vii. EXCLUSIONS: Metro General Services will 'not' monitor, and will 'not' respond to alarms for / from

1. Independent security systems.
2. Call-in, phoned-in alarms from remote central station providers.

3. FIRE DETECTION AND ALARM

a. GENERAL: Design the fire detection and alarm system to minimize risk to Metro General Services. Minimize risk to Metro General Service's property. Reduce Metro General Services support costs, and allow for cost-effective future expansion. Design a complete fully addressable system with all components and

devices to fully protect facility.

b. COMPLIANCE: All new systems shall be Underwriters' Laboratory (UL) listed as compliant with National Fire Protection Association (NFPA) Standards 72 A, B, C, D, and E, most current edition, and shall be installed in accordance with the IBC. Initiating devices for ventilation systems shall be installed in compliance with NFPA Standard 90A. Initiating devices for water flow shall comply with NFPA 13 (Sprinkler Systems) and NFPA 101 (Life Safety Code) and other appropriate or pertinent NFPA Standards regarding the installation, locations, and sensitivity of flow alarms and annunciation. Each piece of equipment shall be approved, listed, and labeled with the UL label.

c. REMOTE MONITORING: Metro General Services has centralized the monitoring of all security and other critical alarms, using a proprietary remote monitoring system. The remote monitoring communication panels are located at the buildings. The System shall be installed and comply with Section 28 10 10. of this Standard. All buildings shall require 24-hour remote reporting and monitoring, and shall use this system, and shall report to Metro General Services Security Services. The fire alarm system shall report the following (via dry contact output) to the remote monitoring system:

i. Common Building Fire Detection Alarm

ii. Common Building Fire Detection Trouble

iii. Common Building Fire Suppression Alarm

iv. Common Building Fire Suppression Trouble

d. AS-BUILT DRAWINGS: Provide a set of as-built drawings of the fire alarm system indicating wiring layout, plastic covered, in or next to the fire alarm panel.

e. SPECIAL REQUIREMENTS FOR FIRE ALARM SYSTEMS INSTALLATION AND REVIEW.

i. Design Builder Architect / Engineer shall make certain that device locations (Address or Location(s)/Life Safety) are shown and listed for review on the drawings. Design Builder shall coordinate room numbers with Metro General Services Representative and shall include the following statement in the specifications: Prior to final programming of Fire Alarm System room numbers shall be verified for correctness.

ii. Program buttons on all main Fire Alarm panels shall be programmed as required.

iii. Specify that room(s)/area(s) with multiple devices have higher priority.

iv. Specify that the Contractor shall provide a copy of Fire Alarm program in every installation to the Design Builder Architect/Engineer as part of closeout documents.

v. Record Documents including Controls, Fire Risers, etc. shall be on AutoCAD and shall be submitted to Metro General Services at substantial completion of the project and before the final payment shall be made by Metro Nashville Government.

vi. Specify that Fire Alarm System shall be required to include a single BACnet communications output with IP Connection.

END OF DIVISION 28 – ELECTRONIC SAFETY AND SECURITY

METROPOLITAN NASHVILLE LANDSCAPE GUIDELINES AND BEST MANAGEMENT PRACTICES

Metropolitan Government Nashville copyright 2013

TABLE OF CONTENTS

PAGE					
3	OVERVIEW	The Guiding Principles of a Sustainable Site			
5	SECTION ONE- Three Areas of Focus for Landscape Professionals	**SOIL** pg 5 Testing and Analysis Amendments Soil Management Plan Topsoil Harvesting and Preservation Rejuvenation Engineered Soil Erosion Control Soil Volume for trees Soil Depth for trees Sinkholes Soil Specifications	**VEGETATION** pg 11 Vegetation Management Plan Protect and Restore Open Space Preserve and Restore Indigenous Plant Community Native Plants Nursery Plant Standards Define and Reduce Turf Grass Improve Conditions for Street Trees Invasive Plant Control Plants for Erosion Control	**WATER** pg 14 Wasteful Irrigation Conventional Stormwater Engineering Water Pollution Low Impact Development	
16	SECTION TWO- Land Development Process	I- Pre-Design II- Design III- Implementation Bidding Submittals Permits	IV- Construction V- Post-Constructon	Urban Forestry Submittal Drawing Checklist pg 18 Prototypical Urban Forestry Submittal Drawing pg 18	
19	SECTION THREE- Maintenance	A- Landscape Management Approach pg 19 Glossary B- Landscape Management Schedule pg 20 C- Landscape Management Areas pg 21 Grounds Maintenance	Pruning and Plant Care Fertilization Mulch Turf Care D- Integrated Pest Management pg 25 E- Animal Control pg 26 F- Irrigation pg 26	G- Special Landscape Areas pg 28 Street Trees and R.O.W. Plantings Green Roof Bioretention Swales Permeable Pavement Playgrounds H- Operations and Staff Training pg 28	
30	SECTION FOUR- Resources	Website & Document Links			
32	SECTION FIVE- Appendix	Landscape Maintenance Calender	Installation Details	Plant Schedules	

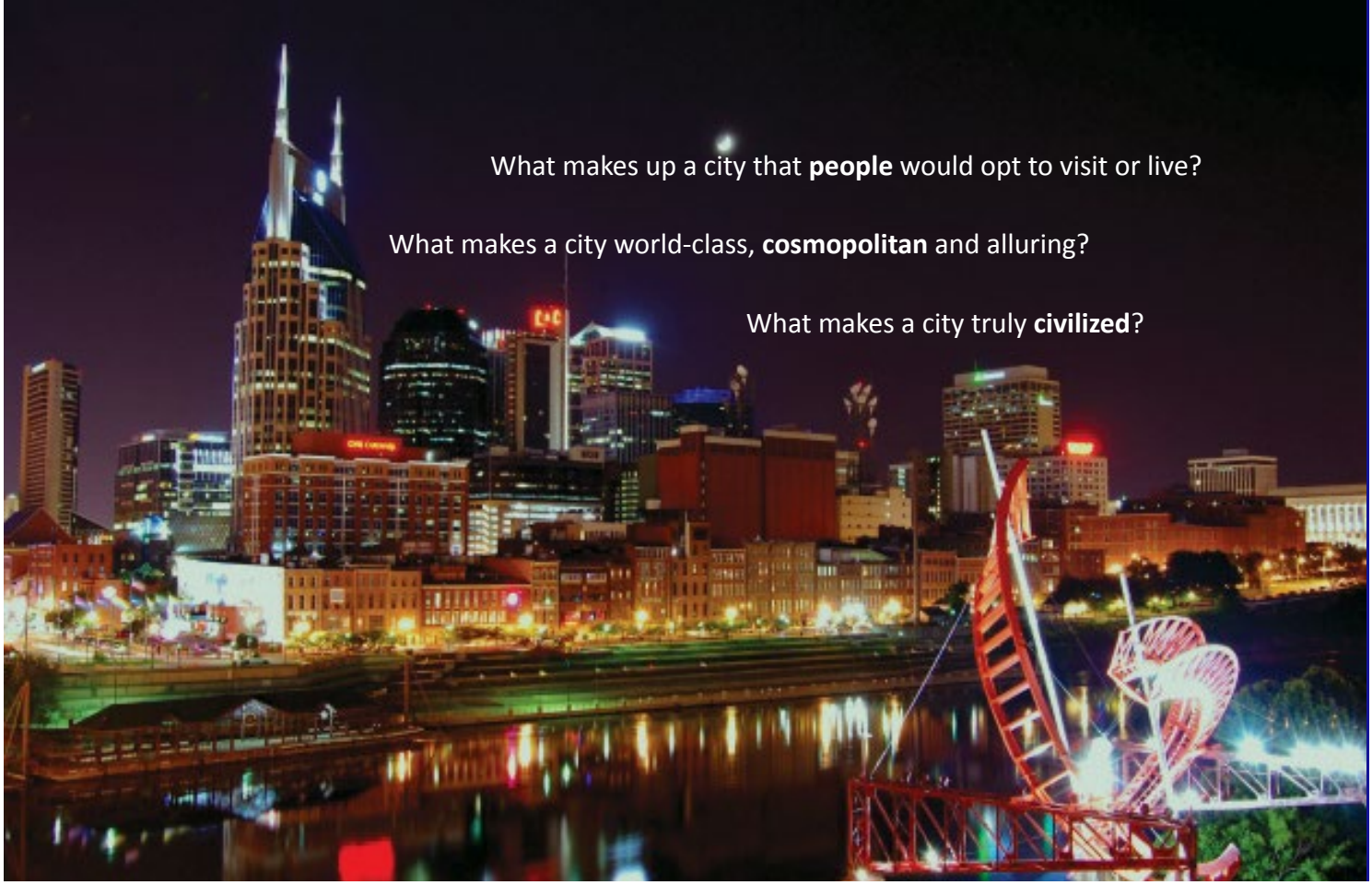

What are things a city of this caliber must have? The list would include historic roots, water, major airport; distinctive architecture; ethnic diversity; houses of worship; universities and hospitals; a symphony orchestra; art and history museums; libraries; open space, parks and plazas; shopping; pedestrian walks; restaurants and cafés; a zoo…

... and most of all, **BEAUTY**, something above utility that unites all these separate features. Beauty, along with other benefits such as **safe, healthy, well-functioning environments**, is the byproduct of excellent **design, planning and maintenance**.

The purpose of this document is to provide guidance for a more holistic, thoughtful, cost-effective and sustainable approach to the impacts we, as landscape design and development professionals, have on our community. As Nashville advances toward becoming the great city envisioned, we recognize a need to make landscape information more accessible, consolidated and standardized.

SUSTAINABILITY
is design, construction, operations, and maintenance practices that meet the needs of the present without compromising the ability of future generations to meet their own needs.

In addition to providing principles and theory of sustainable design, and references, examples and instructions of best practices, this document will outline the basic process of landscape development in Metropolitan Nashville, from pre-design to construction. Its comprehensive approach applies to all land uses within Davidson county including:

- ***Public Land***- Parks, Greenways, Schools, Libraries, Metro Government Offices and Service Sites, Street Right-of-Way's and Easements
- ***Commercial Land***- Industrial Sites, Businesses: retail & office, Sports and Entertainment Venues
- ***Private Land***- High to Low Density Residential, Single Family Residential and Agricultural

These **voluntary guidelines** are for use by anyone making land-use decisions including :

- Landscape Architects,
- Arborists,
- Architects,
- Business Owners,
- City Planners,
- Contractors- landscape & construction,
- Developers,
- Ecologists,
- Engineers,
- Gardeners,
- Government Agencies,
- Home Owners,
- Horticulturist,
- Hydrologists,
- Urban Foresters, and
- Surveyors.

THE GUIDING PRINCIPLES OF A SUSTAINABLE SITE

Among land-use professionals there is a growing awareness of sustainable design practices that mimic natural systems and the benefits inherent in this approach. While sustainable building standards are in place for 'green building' under the US Green Building Council's LEED (Leadership in Energy and Environmental Design) program, no such guidelines exist for landscapes. Yet healthy ecosystems are the foundation of all life. Modeled after LEED, the **Sustainable Sites Initiative (SITES)** is being developed to promote sustainable land development and management practices.

We encourage you to re-evaluate conventional practices and adopt the intent, methods and guiding principles of this document and the SITES initiative as you work through the design and construction process.

Do no harm
Make no changes to the site that will degrade the surrounding environment. Promote projects on sites where previous disturbance or development presents an opportunity to regenerate ecosystem services through sustainable design.

Precautionary principle
Be cautious in making decisions that could create risk to human and environmental health. Some actions can cause irreversible damage. Examine a full range of alternatives—including no action—and be open to contributions from all affected parties.

Design with nature and culture
Create and implement designs that are responsive to economic, environmental, and cultural conditions with respect to the local, regional, and global context.

Use a decision-making hierarchy of preservation, conservation, and regeneration
Maximize and mimic the benefits of ecosystem services by preserving existing environmental features, conserving resources in a sustainable manner, and regenerating lost or damaged ecosystem services.

Provide regenerative systems as intergenerational equity
Provide future generations with a sustainable environment supported by regenerative systems and endowed with regenerative resources.

Support a living process
Continuously reevaluate assumptions and values and adapt to demographic and environmental change.

Use a systems thinking approach
Understand and value the relationships in an ecosystem and use an approach that reflects and sustains ecosystem services; reestablish the integral and essential relationship between natural processes and human activity.

Use a collaborative and ethical approach
Encourage direct and open communication among colleagues, clients, manufacturers, and users to link long-term sustainability with ethical responsibility.

Maintain integrity in leadership and research
Implement transparent and participatory leadership, develop research with technical rigor, and communicate new findings in a clear, consistent, and timely manner.

Foster environmental stewardship
In all aspects of land development and management, foster an ethic of environmental stewardship—an understanding that responsible management of healthy ecosystems improves the quality of life for present and future generations.

THE SUSTAINABLE SITES INITIATIVE

SITES™

The Sustainable Sites Initiative™ is an interdisciplinary effort by the American Society of Landscape Architects, the Lady Bird Johnson Wildflower Center at The University of Texas at Austin and the United States Botanic Garden to create voluntary national guidelines and performance benchmarks for sustainable land design, construction and maintenance practices. Information can be found at http://www.sustainablesites.org/ The U.S. Green Building Council (USGBC), a stakeholder in the Initiative, anticipates incorporating SITES guidelines into future iterations of the LEED Green Building Rating System.

THREE AREAS OF FOCUS FOR LANDSCAPE PROFESSIONALS

SECTION ONE

Three areas; **soil, vegetation and water** are highly interconnected and crucial for a functional ecosystem. They should be managed as valuable resources, not waste. People often underestimate or simply ignore the value of these "ecosystem services" when making land-use decisions— only to realize later how difficult, expensive, and sometimes impossible it is to replicate services once they are lost.

SOIL Healthy soil allows rainwater to penetrate, preventing excess runoff, sedimentation, erosion, and flooding. Soils also help clean, store, and recharge groundwater. By storing water and slowing the delivery of water to plants, healthy soils play a significant role in vegetation health. Undervaluing soil is one of the singular failings of the conventional development approach. For example, a frequent consequence of standard construction practices is soil compaction. Construction equipment can seriously damage soil structure by reducing air space between soil particles which are essential for correct air and water movement. If not restored, compacted soil can start a spiral of degradation. Preventing soil compaction is far easier than fixing it. Stripping topsoil and mixing it with deeper layers of soil to be used as fill dirt should be avoided because it destroys natural soil horizons.

Testing and Analysis- For optimal plant health, soil testing should be performed by the contractor prior to starting work. Testing should be done annually thereafter. In Nashville soil fertility testing can be done at the University of Tennessee Soil, Plant and Pest Center located at Ellington Agricultural Center. The instructions for soil testing can be found at http://soilplantandpest.utk.edu/ The optimum pH range for most plants is between 5.5 and 7.5, however many thrive at pH values outside this range. Analysis of the soil, and the nutrient needs of the plant, will determine if amendments are needed.

Amendments- There are three principal families of amendments: ***organic,*** such as compost and manure; ***mineral,*** including sand, clay based conditioner and ***synthetic*** hydrogels. The particular amendment(s) chosen depend on the type of soil, the plants, the budget and timing since compost takes longer to decompose and release nutrients..

Amendments can benefit the soil depending upon the type of soil and its condition. Organic matter such as compost can increase the soil's water-holding capacity. Organic matter also promotes good soil structure and provides nutrients. The more aggregated, or porous a soil's structure is, the better its drainage and aeration. Larger pores found in a well- aggregated soil allow roots to grow more freely. Water drainage in a heavy clay soil can be improved by amending with large-particle mineral materials, such as sand, perlite, or vermiculite to improve the texture. As organic amendments decompose, they can release nitrogen, phosphorus, potassium, and other valuable nutrients. Although the quantities of these released nutrients are not great, their contribution can complement a regular fertilization program.

STORMWATER GRADING PERMIT

Projects that meet a certain threshold of land disturbance or that alter a site's drainage or the storm sewer system may require a grading permit from Metro Water Services (MWS) Stormwater. Grading permit projects have specific design, inspection, and long term maintenance requirements. Please review Section 3.4 of Metro's Stormwater Management Manual to determine if your project meets the exemption criteria for a grading permit. http://www.nashville.gov/Water-Services/Developers.aspx

Characteristics of Principal Soil Amendments:

ORGANIC

Compost - The amount of compost to be applied depends upon the organic content of the existing soil as well as the targeted amount of the proposed soil amendment. Compost typically has an organic content of 45-60% and is often used as the sole means of providing organic material to the soil profile. In soils that have organic contents of less than one percent, 10 percent by soil weight is a typical target of a proposed soil amendment with compost. As a general rule, a 2-to-1 ratio of existing soil to compost, by loose volume, will achieve the desired organics level. Locally available compost may be utilized if it is of high enough quality and available at a cost effective price.

Nutrients and Lime - If you want to raise the soil pH above 6.0, add pelletized dolomite with application rates in the range of 50 to 100 pounds per 1000 square feet. Nitrogen requirements usually range from 2 to 8 pounds per 1000 square feet, with slow release water-insoluble forms being the preferred method.

Other organic soil additions may include sulfur, manure, worm castings, soil conditioner, dolomite, peat moss and boron.

MINERAL

Sand - Sand can improve soil texture by creating larger pores in heavy clay soils, but sand must be 45% of the volume before improving drainage which makes this approach difficult in large areas. In lesser quantities, the sand particles will actually fill existing pores, making drainage poorer than it was previously making this an option better for localized situations such as small rain gardens.

Calcined clay - Calcined clay is a rigid, odorless mineral that resembles cat litter. Extensively used on golf greens to improve drainage, it can also be incorporated into soils. If incorporated in large enough quantities, the calcined clay particles can keep a soil loose and aerated and encourage deep, sturdy, and healthy root structure.

SYNTHETIC

Hydrophilic polymers (hydrogels) - Hydrogels are hard, crystal-like polymers which, when they come in contact with water, absorb and expand. The absorbed water is then slowly made available to plant roots to prevent or delay water stress. Research has shown that when hydrogels absorb fertilizer salts such as iron, or calcium, they break down and lose their structure. This results in decreasing pore space and insufficient air and water to the roots. Thus, hydrogels can harm soil structure.

For more detailed information on amendments see: Soil Amendments in Landscape Plantings- Cornell University

MATURE COMPOST

is a stable humus material created by: combining organic wastes (e.g. yard trimmings, food wastes, manures) in proper ratios into piles, rows, or vessels; controlling temperature, moisture and oxygen to achieve accelerated decomposition; and adding bulking agents (e.g. wood chips), as necessary, to provide air space; allowing the finished material to fully stabilize and mature through a curing period. It contains an organic mixture of plant nutrients that are released slowly.

IMMATURE COMPOST

creates bad soil biology and increased vulnerability to anaerobic conditions.

STPAUL.GOV

SOIL COMPACTION
is physical degradation resulting in increased density and distortion of the soil where biological activity, porosity and permeability are reduced, strength is increased and soil structure partly destroyed. The compaction process can be initiated by heavy equipment or by the passage of animals. Compaction is the cause of many problems such as reduced water infiltration, unhealthy vegetation, and increased erosion risk by accelerating run-off.

Follow these guidelines to avoid unnecessary soil compaction.

Soil Management Plan (SMP) - The Soil Management Plan is a graphic tool used to show these basic intents:

- Limit disturbance of healthy soil
- Protect soil horizons and maintain soil structure, existing hydrology, organic matter, and nutrients stored in soils
- Limit grading to areas of previously disturbed soils when possible
- Establish clear construction boundaries to minimize disturbance
- Develop and communicate to construction contractors a Soil Management Plan (SMP) prior to construction to limit disturbance
- Assist soil restoration efforts
- Define the location and boundaries of all vegetation and soil protection zones

The SMP should include the following information:
1. On the soils map, site plan, or grading plan, indicate designated soil management areas for all site soils, including, but not limited to:
   a. Soils that will be retained in place and/or designated as vegetation and soil protection zones.
   b. Soils that will be disturbed during construction, restored, and re-vegetated.
   c. Soils disturbed by previous development that will be restored in place and re-vegetated.
2. Indicate locations for all laydown and storage areas, haul roads and construction vehicle access, temporary utilities and construction trailers, and parking (all of which must be located outside of the vegetation and soil protection zones).
3. Describe how areas of restored soils will be protected from compaction (e.g., vehicle traffic or storage), erosion, and contamination until project completion.
4. Describe treatment details for each zone of soil that will be restored, including the type, source, and expected volume of materials.
5. Outline the footprint of buildings and hardscape (e.g, trails, roads, etc.) and any areas of trees and other vegetation that will be preserved in place.
6. Communicate the SMP to site contractors in site drawings and written specifications.
7. Locations and installation procedures for protective fencing and signage.

Topsoil Harvesting and Preservation- Topsoil should be harvested at the start of grading. It should be stored in an area where it will not do damage such as a previously disturbed area. Cover the pile with breathable fabric, wood chips, or sterile annual grass to prevent erosion and weeds. If needed, amend just before re-spreading. Don't work soil when it's overly wet. Topsoil should come from one source for consistency in drainage.

Nilsson et al. BMC Bioinformatics 2005

Mycorrhizae fungi form a symbiosis with plant roots enabling plants to take up more nutrients. The plant roots in return release sugars for the fungus.

Rejuvenation- Most often the problem with unhealthy soil is compaction. Soil compaction does not allow air and water to reach plant roots. Oxygen and water are the two elements that are most important for plant roots. Without oxygen, plant roots can not respirate, converting photosynthetic made sugars into energy for growth. Additional microbes such as mycorrhizae fungi may suffer too. The compacted soil should be loosened and the fungi replaced in the form of mycorrhizae fungi. The combination of the two can result in a more stable soil that is less susceptible to erosion and better able to retain water. Soils can be loosened by core aeration, and organic amendments. It took millions of years to create natural soil horizons but they can be disturbed in seconds. It will take time and care to restore the soil back to healthy conditions that can give the newly-planted landscape every advantage to grow into the attractive setting that was designed.

Engineered Soil- Engineered soils can be designed for specialized applications such as urban tree boxes, Rain Gardens, and Green Roofs.

CU-Structural Soil™- was developed at Cornell University as a method to safely bear pavement loads after compaction and yet still allow root penetration and vigorous tree growth. It has high stone and gravel content with a small amount

of hydrogel. Some issues with poor nutrient uptake have been noted on local projects using this approach. Designers are moving away from this approach and working with alternatives such as suspended pavement systems.
Deeproot Silva Cell- http://www.deeproot.com/blog/blog-entries/suspended-pavement-at-the-bartlett-tree-lab-year-8
citygreen Strata Cell- http://www.citygreen.com/products/structural-cells/stratacell/

Rain Garden Soils are designed with a high content of coarse sand to allow infiltration and drainage of storm water. Bioretention areas designed to treat stormwater for compliance with Metro's water quality standards have specific soil mixture requirements. http://www.nashville.gov/Water-Services/Developers/Low-Impact-Development.aspx

Green Roof Soils are designed for shallow depths and to be light weight. By using a mixture of native soil upgraded with organic or mineral additives (peat, humus, wood chips, sand, lava, or expanded clay), it is possible to achieve optimum water retention, permeability, density and erosion control necessary to support the Green Roof vegetation. Green roof soil mixtures designed in compliance with the Green Roof specification should contain no more than 15% organic matter.

http://www.stormwaterresourcesformunicipalites.com/monroe_county.htm

Without proper erosion control stormwater runoff from construction sites depletes topsoil and pollutes streams.

Erosion Control- We have all seen erosion on major construction sites but small areas are also susceptible to runoff and erosion. Sometimes the process can be subtle such as exposed roots or soil and mud on pavement. Erosion is unsightly and can be dangerous. Rainfall or excess irrigation causes runoff from lawns, roads, parking lots and farm fields. Eroding topsoil can contain contaminants such as fertilizer, pesticides and petroleum products. All of these contaminants end up downstream and sometimes in our water supply. Projects that require a Metro grading permit have specific Erosion Prevention and Sediment Control Plan requirements. Please see Section 4.2.2.2 of Metro's Stormwater Management Manual for additional information.
http://www.nashville.gov/Water-Services/Developers.aspx
Stabilizing the soil on a slope is the answer. Here are ways to control a slope:

Baffles or barriers are obstruction devices that slow down or divert water from flowing directly downhill. They consist of partially buried stone or timbers (laid parallel to the slope). These barriers work best for lesser slopes.
Stone (at least 6"-8" wide each). The stone is embedded into or spread loosely onto the slope. Stone also slows and diverts flowing water
Terraces "stair-step" the slope. The flat surfaces allow you to plant on the terraced levels. Terraces allow water to infiltrate instead of running off. Use timber, stone, concrete or precast concrete block to build the retaining walls. Start at the bottom and fill in the level above with soil from the area just leveled (a technique called cut and fill). Terraces should slope a bit (about 2% is recommended) to prevent water from collecting at the back of the terraced portion.
Remember that mortarless retaining walls can only reach a certain height (usually about 2'). Check the specifications of the product you are using for height restrictions. Also remember to backfill the area behind the wall with crushed rock and add weep holes to ensure drainage. If you build a terrace around existing trees, make sure the soil level is not raised. Covering the roots even a few inches can damage or kill the tree.

Plants can be used to reduce erosion on slopes. Any of the slope control methods can be planted. When plants are established, the roots help anchor the soil. Getting seeds established on a slope can be difficult. Seeds and mulch wash away and planting holes are eroded before the plant gets established. A covering of straw can help secure the seed and reduce water runoff. On steep slopes you may need to hydroseed.

Another method is a seed germination blanket. The blanket is a combination of bio-degradable and wood fiber that holds seed and fertilizer in place until seedlings can take root. A maintenance plan for invasive plant control will need to be put in place until establishment. Temporary remedies include: plastic sheets, straw bales, mesh, straw-blankets, silt fences and mulches. These are short-lived, as they will bio-degrade or wash away over extended periods of time.

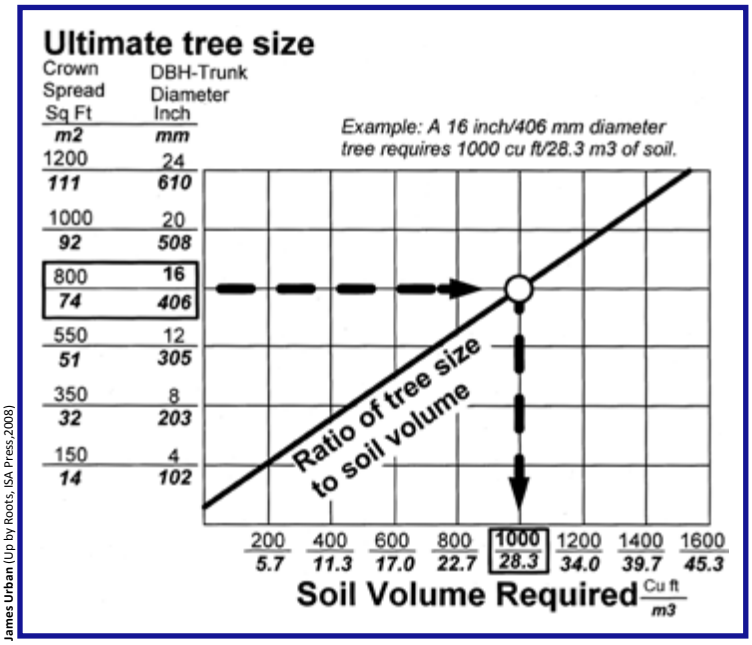

James Urban (Up by Roots, ISA Press,2008)

Soil Depth for trees- Tree soil should have a minimum depth of 3 feet or enough depth to allow for the root flare at the base of the tree to be even with the finished grade. The soil can be a mix of topsoil and subsoil. When installing the soil it should be installed in 12 inch deep lifts or layers. The final topsoil layer should be at least 12 inches deep. Before installing lifts, the subgrade soil surface should be tilled or loosened to break up any compaction that occurred. The same should be done between lifts if any compaction occurs.

Soil Volume for trees- The amount of soil installed will in large part determines the maximum size that the tree will achieve during its usable life span. Only the upper three feet of soil should be used for calculations in this table. The example illustrated shows that to achieve a trunk diameter of 16 inches,1000 cubic feet of soil are needed.

Sinkholes- or eroded bedrock, are common in Middle Tennessee. Our geological area is known for Karst topography which features subsurface erodible limestone that results in sinkholes and caves. Sinkholes can be a natural occurrence or can form over time from man-made features that cause water to accumulate such as retention ponds and ground-water pumping. They can range in size and cause major destruction when large. Remediation can be challenging. When avoidance is not possible, some methods include filling, capping or converting to a water feature. Sinkholes should be shown in survey information.

Soil Specifications- The top soil and subsoil may be from either a naturally occurring soil or soil that has been mixed to achieve the requirements.

Texture. Both top and subsoil should be a sandy loam soil with 50-80% medium and coarse sand (<25 % fine sand), 5-20% cay, 5-35% silt.

Stones and rocks. No stones larger than 1 inch in the longest dimension are allowed. Stones ranging from 0.5 to 1 inch shall not exceed 5% of the soil volume, and gravel ¼ to ½ inches shall not exceed 5% of the soil volume.

Debris content. Particles greater than 1 inch in the longest dimension are not allowed. This includes fragments of brick, concrete, wood, glass, metal, stone and plastic. The total volume less than 1 inch long should not be more than 5% of the soil volume.

Contaminants. The soil should have no herbicides, heavy metals, biological toxins, or hydrocarbons that will impact plant growth or are at levels exceeding the EPA's standards for soil contaminants.

Clod size. Mixed soils often contain soil clods with high clay content. While smaller soil aggregates are desirable from a soil drainage perspective, larger clods

TOPSOIL

Topsoil is one of our most important natural resources. It can take 500 years for one inch of topsoil to be. It is becoming a scarce commodity largely due to poor landscaping practices.

Quality topsoil is crucial for healthy plants. A quality topsoil will have the proper balance of nutrients and is the right texture. Have a soil test done before purchasing.

There are no regulations for selling topsoil. Be cautious and know the soil's history before purchasing.

Avoid soils that may have residues of herbicides, pesticides, chemical fertilizers and weed seeds.

Do not allow the contractor to sell existing topsoil from the jobsite unless there is a surplus, or it is of inferior quality, amending is not feasible and it can be used as fill.

Soil Drainage Perk Test

STEP 1- Dig a hole at least 6" in diameter by 12" deep, with straight sides. If you're testing a large site, dig several holes scattered around, since drainage can vary.

STEP 2- Fill the hole with water, and let it sit overnight. This saturates the soil and helps give a more accurate test reading.

STEP 3- The next day, refill the hole with water.

STEP 4- Measure the water level by laying a stick, pipe, or other straight edge across the top of the hole, then use a tape measure or yardstick to determine the water level.

STEP 5- Continue to measure the water level every hour until the hole is empty, noting the number of inches the water level drops per hour.

The ideal soil drainage is around 2" per hour, Readings between 1"- 3" are acceptable. A rate less than 1" per hour is too slow. Improve drainage or choose plants tolerant of wet soil.

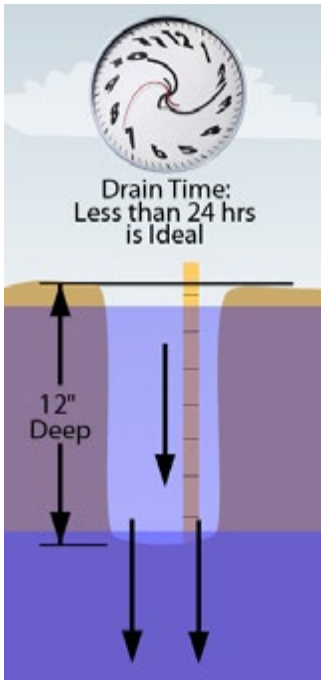

Soil Specifications continued-

are not. Therefore, it is permissible to have unlimited amount of natural aggregates that are less than 1 inch long, but clods from 1-3 inches should make up less than 10% of the soil volume and clods 3-6 inch should be < 5%.

Organic matter content. Organic matter (OM) is important for retaining water, maintaining stable soil aggregates, promoting biological diversity and providing nutrients for tree growth. The top soil shall have 4-6% OM by weight. If additional organic matter is needed, compost can be added to the soil. A well composted yard waste or wood chips compost can be used, as long as there is 10 percent OM by volume in the compost. No soil mix should contain more than 15% compost by volume so as to avoid settling/subsidence problems. Subsoil should have between 1-3% OM, but higher levels are not detrimental.

Density. Soil density needs to be high enough to avoid settling, yet low enough to allow root growth. Top soil should have a density of 1.0 to 1.4 g/cc and subsoil 1.2 to 1.5 g/cc. A vibrating plate compactor should be used between 12 inch lifts to settle the soil. Number of passes required needs to be determined on site. A starting point is two passes of a 20 inch impact plate vibrating compactor on a moist (not wet) soil to achieve the desirable density. Take care not to overly compact the soil.

Drainage. Water should readily drain from the soil. Percolation rates of 1-2 inches per hour are preferred A drainage system should be installed if the native subsoil has a drainage rate less than 1 inch per hour. Corrugated, slotted pipe should be used for drainage. Slots must only be on the bottom half of the pipe. If pipe has slots on the top, plastic sheeting should be taped to the top to prevent soil contamination of the pipe. Drain pipe should be surrounded with coarse sand and should not be wrapped with filter fabric to avoid future clogging problems. The coarse sand trench should be at least 12 inches wide and 10 inches deep, with the pipe in the center. The pipe must slope at a minimum 2% downhill to an appropriate drainage area.

Soil pH. Soil pH determines the availability of nutrients in the soil. The desired pH range is dependent on the plant species. Generally, a pH range is 5.5-6.6 is suitable for most plants. Test soil for pH and nutrients prior to planting. University of Tennessee Soil, Plant and Pest Center- Ellington Agricultural Center soil testing: http://soilplantandpest.utk.edu/

Nutrients. Plant available nutrients should be tested prior to soil installation. If they are found to be at levels that are listed as "medium" or less on the soil analysis report the soil should be amended with the appropriate fertilizers. If nitrogen is required, the nitrogen fertilizer shall contain at least 50% of the total N applied in a water insoluble (WIN) form.

Soluble salt content shall be less than 2 dS/m.

Water is an essential component of keeping plants alive and thriving. Soil moisture should be monitored regularly and water applied when needed. Over watering can also harm plants. Install soil moisture sensors at the time of soil installation.

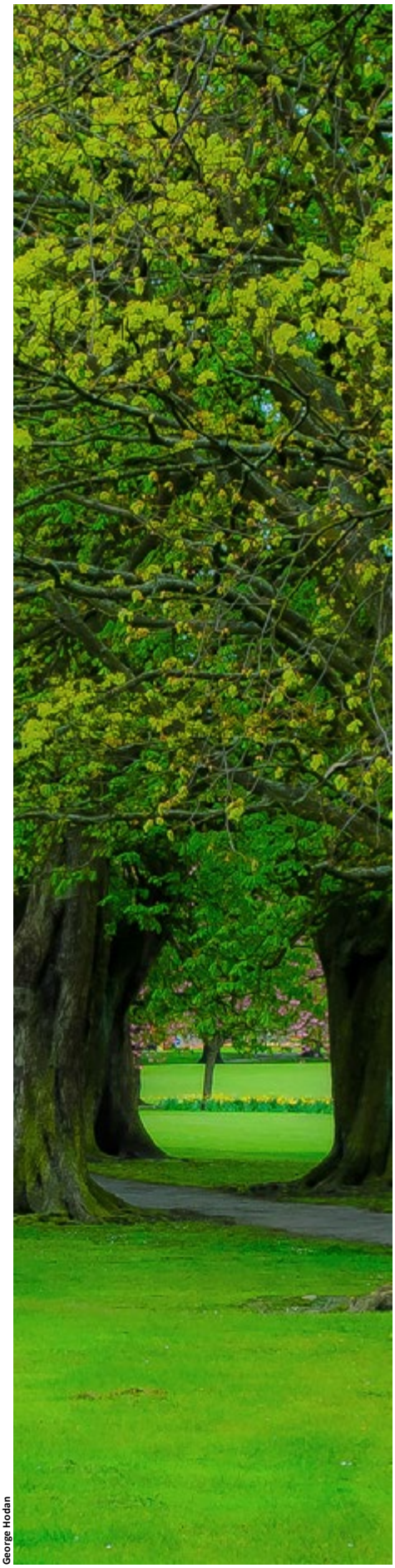

George Hodan

VEGETATION

Removing existing vegetation disturbs soils and can lead to irreversable consequences. Without vegetation, a site loses its natural ability for filtering stormwater and groundwater recharge. Reduced vegetative cover also affects soil health, because vegetation helps maintain soil structure, contributes to soil organic matter, and limits erosion. Excess sedimentation is the major cause of polluted rivers and streams in Nashville. Sediment runoff rates from construction sites can be up to 2,000 times greater than those of forested lands. By adopting a plan with defined vegetation protection zones, a sustainable approach to site design and construction would preserve or restore appropriate vegetation on the site and preserve native plant communities and mature trees.
It takes decades to replace what is lost when a site is cleared to make way for construction. Thoughtful observation of the existing natural systems and proper planning can preserve and enhance the many ecosystem benefits and services. Design and planning tools for this purpose include:

Vegetation Management Plan (VMP)- Whether vegetation information is included in the SMP or a separate drawing, the plan should show; a tree survey to define location, size, and quality, areas of other significant vegetation, overhead and underground utilizes, trees to be removed, trees to remain, treatments such as pruning , fertilization and pesticides, tree protection zones, fencing and signage details, note to contractor to avoid anything that will cause damage to trees such as compaction of the root zones or scarring and breakage from equipment. See SECTION FIVE-APPENDIX page 32 for examples. A pre-construction meeting should be held to educate all construction and maintenance personnel about the plans and protective measures.

Protect and Restore Open Space- The EPA defines Open Space as; any open land that is undeveloped (has no buildings or other built structures) and is accessible to the public. Open space can include green space (land that is partly or completely covered with grass, trees, shrubs, or other vegetation) such as parks, community gardens, cemeteries, schoolyards, playgrounds, public seating areas, public plazas and vacant lots. Just as in any other land uses, the way Open Spaces are managed can have good or bad environmental impacts, from pesticide runoff, siltation from overused hiking and logging trails, and destruction of habitat. Information and tools for protecting Open Space can be found on the EPA's website Open Space Development- http://www.epa.gov/owow/NPS/ordinance/openspace.htm

In March 2011, Metro Nashville completed the Nashville Open Space Plan for Davidson County. It should be a guide for local development projects when relevant. It can be found at: http://www.nashville.gov/sustainability/

Preserve and Restore Indigenous Plant Community native to the ecoregion of the site to contribute to regional diversity of flora and provide habitat for native wildlife. Use this community as the reference model for planting design. If the project has no healthy plant community, look off-site to nearby undisturbed areas as a model.

Use Native Plants for both formal and naturalistic designs when they are the best choice. On sites with existing native plant communities, design the site to minimize damage to existing healthy native plant communities, especially those areas that provide opportunities for connectivity. See links to native plant resources in SECTION FOUR-RESOURCES.

Nursery Plant Quality Standards from the American National Standards Institute (ANSI) 2004 American Standard for Nursery Stock publication can be found at: http://www.anla.org/index.cfm?area=&page=Content&categoryID=260
The new release of ANSI A300 (Part 6)-2012 Planting and Transplanting standards can be found at: http://www.tcia.org/business/business-resources/ansi-a300/part-6

Define and Reduce Areas of High Maintenance Turf Grass- According to one estimate, 40 million acres of land is devoted to turf grass in the United States with nearly 75 percent in home lawns. More than 30 billion dollars are spent on annual lawn maintenance. This annual expenditure could be significantly reduced by using a Landscape Management Plan and taking an Integrated Pest Management approach using cultural, chemical and biological methods to manage diseases, insects and weeds. Both are important parts of a sustainable lawn care program. Sustainability as it relates to lawns can be defined as a lawn area that requires few material inputs while having a positive impact on the environment. Creating a more sustainable lawn requires proper selection of the best adapted grass species as well as proper site preparation, lawn installation, and appropriate maintenance.

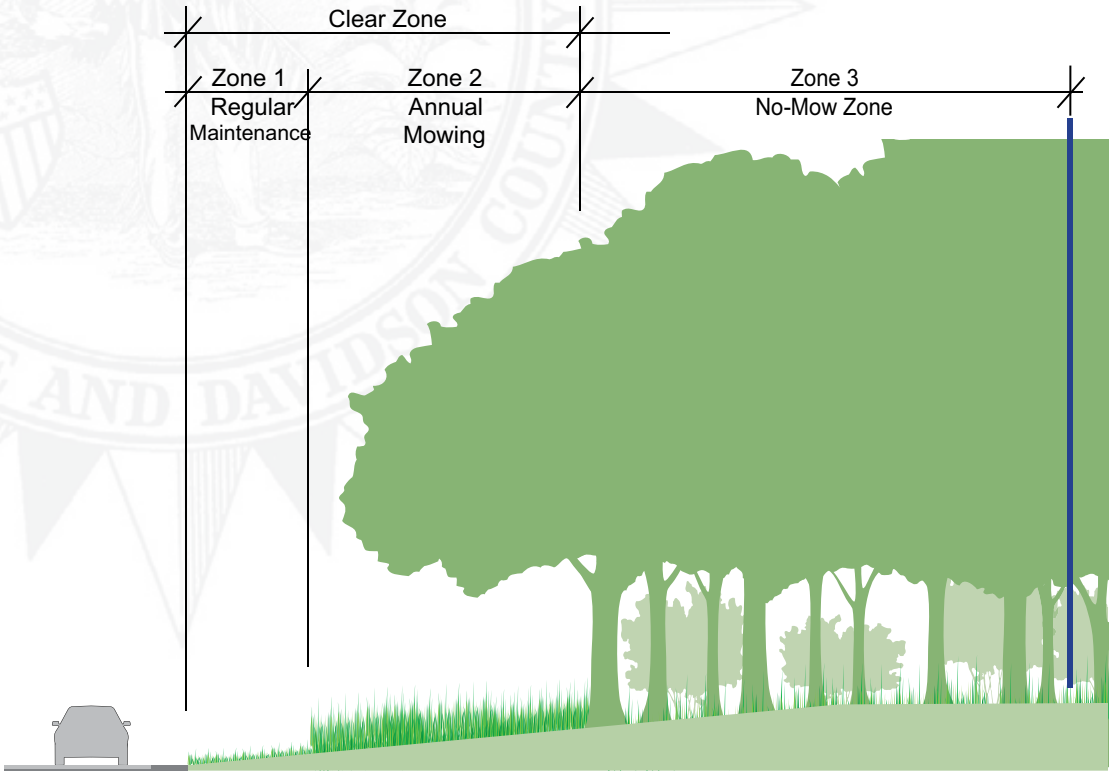

Reduce mowing by creating maintenance 'zones'.

Improve Conditions for Street Trees- Urban conditions are hard on street trees and many suffer from limited root space, poor and compacted soils, and injuries to their trunks and branches. Coordinated design with ample space for growing trees, protection from vehicles and people, and consistent maintenance will help street trees grow and thrive. Some recommendations are:

- Prioritize space and location for street trees.
- Choose quality, local or regional trees and disease resistant species.
- Incorporate street-side stormwater management techniques like tree box infiltration planters, bioswales and stormwater curb extensions.
- Update streetscape standards to improve soil volumes that ensure tree roots have room to grow. See Soil Volume for trees page 9
- Relieve compacted soil around trees with radial trenching, vertical mulching, compost stirring and root flare excavation.
- Removing excess fill and mulch at base. Pull mulch away to not contact tree bark.
- Street trees are not always permanent. Plan to replace them at some point when they no longer fulfill their designed function.

Information specific to producing planting plans compatible with Metro Urban Forestry Guidelines can be found at:
http://www.nashville.gov/Codes-Administration/Codes-Administration/Publications-List/General-Publications-List.aspx
Metro Landscape Zoning Ordinances
http://library.municode.com/index.aspx?clientId=14214

Improve Conditions for Street Trees- continued

- Remove or cut girdling roots.
- Young trees need a training prune to avoid future problems (crossing or rubbing branches, multiple leaders, etc.) and periodic future pruning to keep sidewalks, roads, buildings and light poles clear of branches. See SECTION THREE page 21 for pruning guidelines.

Nashville.gov

Deaderick Street, Nashville-Tennessee's first Green Street https://secure.nashville.gov/pw/projects/deaderick.asp

- Increase habitat diversity and disease resistance by not planting trees of only one species or 'monocultures'.
- Protect existing trees during streetscape construction by enforcing regulations and incorporating street design techniques like rubber sidewalks and bump-outs.
- Salt and other chemical deicers for streets should be avoided when possible. Track the weather and only use deicers when there is a high probability of snow or ice. Snow should be shoveled or plowed when possible. If the temperature will remain above 23 F, use calcium magnesium acetate (CMA). Sand can also be combined with deicers to reduce salt amounts. Apply deicers sparingly and never at a rate greater than the manufactures' guidance. Pervious pavements typically manage frozen precipitation better than solid pavements. Use salt tolerant species in areas that will unavoidably receive high concentrations of salt. For more information see: http://www.mde.state.md.us/assets/document/WINTER_2.pdf
- Establish partnerships with business districts, community groups, nonprofits and residents to water, monitor and care for trees and landscape in public areas.
- For information on state roadway landscaping see TDOT Landscape Guidelines- http://www.tdot.state.tn.us/environment/beautification/landscapedesign.htm

Invasive Plants Control- Landscape professionals need to be knowledgeable about invasive plants and understand how to recognize, manage and avoid spreading them. The USDA publication; A Management Guide for Invasive Plants in Southern Forests is an extensive guide to all issues concerning invasive plants. To download go to: http://www.srs.fs.usda.gov/pubs/36915 USDA resources on invasive plants specific to Tennessee can be found at: http://www.tneppc.org/invasive_plants

Plants for Erosion Control- Deep rooted native grasses, wildflowers, clump-forming ornamental grasses, shrubs or other perennial native plants usually adapt quickly to slopes and unimproved soil. Loblolly Pine (Pinus taeda) is one of the best trees for erosion control. The fallen needles lock together to form a protective layer over the soil.

Turfgrass can control erosion on minor slopes if the grass is healthy. A grass such as annual rye can germinate quickly and help stabilize soil while perennial grasses can get established. Compacted soil is a major contributor to runoff. Aerate if possible, and add organic matter such as compost to promote a healthy stand of grass. For more information see TN Dept. of Environment and Conservation, TN Erosion and Sediment Control Handbook: www.mtas.tennessee.edu/citydept/pw/bmptoolkit/sedimentcontrol.pdf

George Hodan

WATER

Freshwater resources are under duress all over the world, and Tennessee is no exception. Even the Nashville area has been experiencing extreme conditions from flooding to droughts. Meanwhile, demand for water in the United States has tripled in the last 30 years, even though population has only grown 50 percent. As water rates rise, the imbalance between supply and demand has become so striking that investment bank Goldman Sachs has dubbed water "the petroleum for the next century." Yet the two widely accepted practices of irrigation and conventional stormwater engineering not only contribute to the imbalance but also ignore the looming crisis.

A sustainable approach to design begins by doing an inventory and assessment of all hydrologic features of a project site. The plans would include; water bodies, flow patterns, damp soils, storm and/or waste water utility line locations, existing irrigation, water lines, flood zones, groundwater recharge areas and riparian zones. The study area should extend beyond the project site limits to the watershed level for a better understanding of the dynamics affecting the site. This information is used to develop design and management plans that address water issues and prioritize objectives such as:

- Protect and restore natural hydrology and riparian, wetland and shoreline buffers. Buffer restoration may require the approval of Metro Water Services. Please see Section 6.9.6 of Metro's Stormwater Management Manual for additional information. http://www.mde.state.md.us/assets/document/WINTER_2.pdf and TVA- http://www.tva.gov/river/landandshore/stabilization/index.htm
- Manage stormwater on-site to reduce flow to storm water systems and increase ground-water recharge
- Reduce or eliminate irrigation
- Use non-potable water for irrigation
- Use permeable hardscaping

Wasteful Irrigation- The decision to include an irrigation system on a site must be done on a case-by-case basis to determine if the benefits outweigh the costs.
Currently the Metro landscape ordinances require:

> *Watering. All required landscaping, excluding trees planted or preserved on residential property in accordance with Section 17.24.100 of this chapter, shall be watered by one of the following methods: 1. An underground sprinkler system; 2. An outside hose attachment within one hundred feet of all landscaping.*
> http://library.municode.com/index.aspx?clientId=14214

Irrigation of unsustainable landscapes accounts for more than a third of residential water use—more than 7 billion gallons of treated potable water per day nationwide. With soil compaction a common problem in developed areas, the infiltration rates of water are significantly reduced, causing much of the water used to irrigate lawns to end up as runoff or evaporate instead of percolating into the soil. Irrigation maintenance guidelines to help run your system efficiently can be found in SECTION THREE-MAINTENANCE, Part E- IRRIGATION page 26.

A sustainable approach to landscape irrigation design would minimize or eliminate the use of potable water or the drawing off of natural surface water or groundwater for landscape irrigation once plants are established. Ideas for water harvesting and other Low Impact Design methods can be found in the SECTION FOUR-RESOURCES page 30.

Conventional Stormwater Engineering- undervalues rain: In most cities, rainfall is treated as waste, to be funneled directly from gutters and drains to sewers. In older cities such as Nashville, the stormwater from a portion of the downtown area drains

Click image to view document

into combined sewer/stormwater systems that flow to water treatment plants, thus raising the cost of purifying drinking water. In heavy storms, these combined sewer systems can overflow, dumping raw sewage into fresh water.

Rather than getting rid of stormwater runoff as quickly as possible, a sustainable approach to stormwater management would find ways to capture it on site and use it for irrigation, bioretention gardens, and groundwater recharge.

Water pollution- Without a sustainable approach to managing water on site, excess runoff damages soils and vegetation that help to filter and cleanse water. During heavy rains, water leaving developed sites can contain a host of pollutants. These pollutants may range from excessive nutrients, silt, fertilizer, oil, grease, toxic chemicals, animal waste and heavy metals to biological contaminants such as E. coli and hepatitis A. Stormwater runoff is one of the leading sources of pollution for all water body types, with impacts that can escalate with increased development and urbanization.

Low -Impact Development (LID) is a land planning and engineering design approach to managing stormwater runoff. LID emphasizes conservation and use of on-site natural features to protect water quality. This approach implements engineered hydrologic controls to mimic the pre-development hydrologic regime through filtering, infiltrating, storing, evaporating, and detaining runoff close to its source. LID addresses the objectives of sustainable design and provides the tools for implementation.
To learn more about LID see SECTION FOUR-RESOURCES page 30.

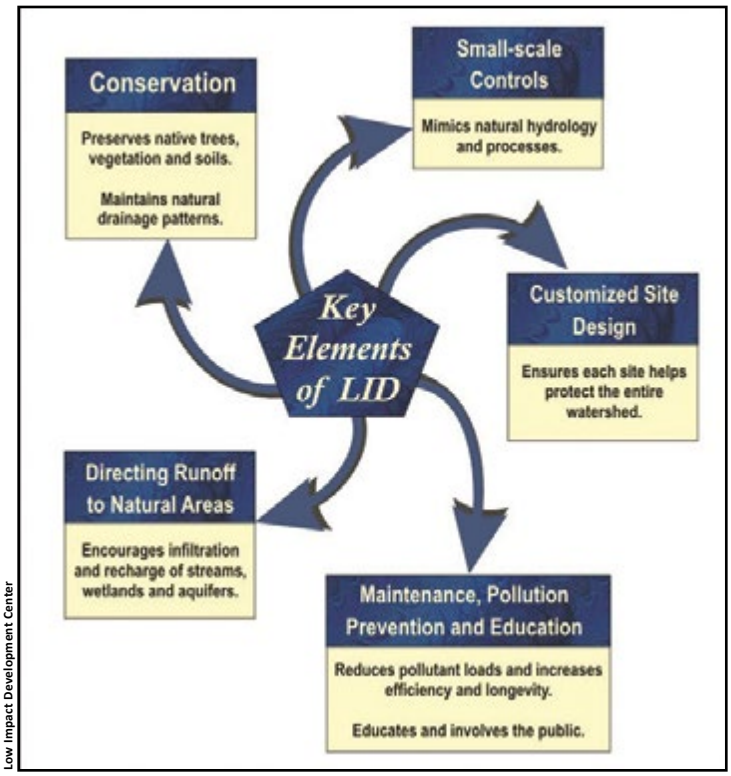

Low Impact Development Center

Key Elements of Low Impact Development

Click image to view document

LAND DEVELOPMENT PROCESS- Design through Construction

Every project has its own unique set of design parameters. This document will not only cover design principles and theory but will touch on the basic elements of the design process as it relates to Landscape Guidelines and Best Management Practices.

Victoria Transport Policy Institute

Complete Streets

While designing for sustainable, low impact environments, also consider incorporating Complete Street concepts when applicable. Complete Streets are streets which are designed and operated to enable safe, attractive, and comfortable access and travel for all users, including pedestrians, bicyclists, motorists and public transport users of all ages and abilities. For more information on how to plan using Complete Street concepts see:

NashVitality-

http://www.nashvitality.org/active/building-active-places/complete-streets.aspx

Nashille Complete Streets-

http://www.nashville.gov/Public-Works/Getting-Around-Nashville/Complete-Streets.aspx

I- PRE-DESIGN- When selecting the design team, it is best to work with local design professionals well versed in the local regulations, practices and plant communities.

Research and Analysis

1. **Project Acceptance-** Agreement between the client and the designer on scope of services, products and costs.
2. **Research and Analysis-** To achieve a thorough understanding of the background of the project and the conditions that will affect the end result. Tasks include:
   a. Site Visit- Include photographic documentation. Soil testing if needed.
   b. Base Plan Preparation- Ideally is a professional survey to scale and includes:
      - Property line with bearing, distance, north arrow and scale bar
      - Topography and spot elevations
      - Vegetation- All trees over 6" DBH with their size, species and condition. Other significant vegetation such as tree lines and shrubs
      - Bodies of water- Streams, lakes, ponds, wet areas
      - Buildings- locate windows, downspouts, electrical features and exterior lights
      - Other features-including roads, drives, parking, paths, terraces, walls, fences, culverts, headwalls etc.
      - Utilities- Overhead and underground lines
      - Off-site adjacent conditions
   c. Site Inventory and Analysis- Determine the site's character, problems and potential. Work with drawings that 'layer' information.
   d. Client Interview- To obtain information about the client's uses, needs, budget and wishes.
   e. Program Development- A list of goals, design elements and special requirements.

II- DESIGN- Throughout the process; designers will work with the client and stakeholders to develop the best solutions based on the program criteria, site data and Metro ordinances. Some important design standard links are:

Metro Zoning Landscape Ordinance- http://library.municode.com/index.aspx?clientId=14214

Metro Stormwater-http://www.nashville.gov/Water-Services/Developers.aspx

Americans with Disability Act (ADA)- http://www.nashville.gov/gsa/ADA/relrefs.asp

Metro Urban Forestry worksheet and other related documents-
http://www.nashville.gov/Codes-Administration/Land-Use-and-Zoning-Information/Urban-Forestry.aspx

The following are the results of the design process.

1. **Functional Diagrams-** loose studies of ideal relationships applied to site conditions.
2. **Concept/Schematic plan-** detailed drawing of specific uses and areas drawn to scale.
3. **Master Plan-** all elements drawn together in a realistic, complete graphic manner.
4. **Design Development-** details the appearance and integration of elements and materials.
5. **Construction Documents-** technical and mechanical communication on how to construct all elements.
   a. Layout Plans
   b. Management Plans
   c. Grading/Drainage Plans
   d. Planting Plans
   e. Construction Details. See standard landscape details in SECTION FIVE-APPENDIX page 32
   f. Written Specifications

III- IMPLEMENTATION
BIDDING PROCEDURES
Metro Purchasing Dept. has numerous ways in which the Bidding Process can be executed for design and/or construction services. This simplified outline illustrates a typical construction project.

The **Contract Documents** will include the construction documents, the general conditions documents, pricing tabulation sheets and bond requirements. The written specifications define the requirements for quality, performance and warranty of materials and construction. The industry standard for specifications is provided by the Construction Specifications Institute (CSI) – MasterFormat- http://www.masterspec.com/structural_civil_landscape_specifications.aspx

The Contract Documents are issued along with a **Request For Proposals (RFP)** by either an open (public) or closed (pre-approved contractors) solicitation to vendors to submit bids. Within Metro, bid requests can be found on the Metro Purchasing Procurement website and sent via email through Metro's Workflow Mailer to pre-approved contractors. Information on doing business with Metro as well as lists of Metro Pre-approved contractors and design consultants can be found at the iProcurement System website- http://www.nashville.gov/finance/procurement/iprocurement.aspx
The RFP will contain all the information about what is required for the submittal. The bidding process will close on a date and time specified in the RFP.

The bid packets will be evaluated by a group of representatives from the Metro departments involved in the work, a representative from the Purchasing Dept. and a representative from Metro Office of Minority and Women Business Assistance. The proposals may be narrowed down to a few candidates called a 'Short List'. These bid teams may be asked to have an interview with the Metro evaluation group to answer questions in more detail. The bid team making the highest score during the evaluation process will be awarded the work. They will then go through contract negotiations to determine both parties' responsibilities, schedules and fee. After these negotiations are complete they will receive a 'Notice To Proceed' and work can begin.

The **Permitting Process** must be mentioned here as well. Depending on the size and impacts of the project, one or more permits will be required. The requirements must be determined on a case-by-case basis. Included in SECTION FOUR- RESOURCES pg 32 of this document are links to various Metro Departments involved in permitting.

TREE REMOVAL PERMIT
A tree removal permit is required whenever a tree or trees are to be removed, and are greater than six (6") inches in diameter.

This may be waived if the property is zoned for Single Family Residence or Duplex Residence, or a valid Building Permit has been issued.

IV- CONSTRUCTION
The Landscape Professionals level of involvement during construction will vary based on their role and contract responsibilities. At a minimum, the Landscape Professional is expected to have a pre-construction meeting with the contractors to see that all directives are clearly understood. They also will make regular site visits to inspect the quality of plant material, topsoil and installation and to see that the work is going according to the plans. Photographic documentation is advised.

V- POST-CONSTRUCTION EVALUATION
When construction is complete, the Landscape Professional will do a final inspection. If corrections are needed they will produce a 'Punch List' outlining the deficiencies. After these have been corrected the Landscape Professional will send a letter to the Metro Urban Forester in the Codes department stating that all work is complete.

The last action required in the Construction Phase is to produce a set of 'As-Built' drawings to document any changes to the plans made during construction. These will be included in the close-out documents and kept on file for future reference.

Urban Forestry Permit Submittal Drawing Requirements

The landscape plan submittal drawing should show:

- ☐ Name and address of project
- ☐ Permit number
- ☐ Name and contact information of designer and project manager
- ☐ Signed and dated seal of licensed professional overseeing design
- ☐ Scale bar
- ☐ North arrow
- ☐ Topography
- ☐ GPS coordinates
- ☐ Zoning of project limits and all adjacent parcels
- ☐ Location of all overhead and underground utilities
- ☐ TN One-Call number (811)
- ☐ Location of all protected trees
- ☐ Tree protection fence
- ☐ Replacement trees
- ☐ Tree Density Units (TDU) calculation worksheet
- ☐ Required Street trees
- ☐ All plant material for required landscape buffers
- ☐ Irrigation system or hose bib attachments
- ☐ Plant schedule listing –quantity, units, Latin and common name, hybrid or cultivar name if applicable, caliper and/or height, spacing, container or root ball size
- ☐ General and Special Notes to contractor
- ☐ Low Impact Stormwater Design should be shown for review by the Stormwater Department.

Other drawings included in the submittal will include all relevant construction and installation details such as tree and shrub planting, mulching etc. See SEE SECTION FOUR-RESOURCES page 30 for examples.

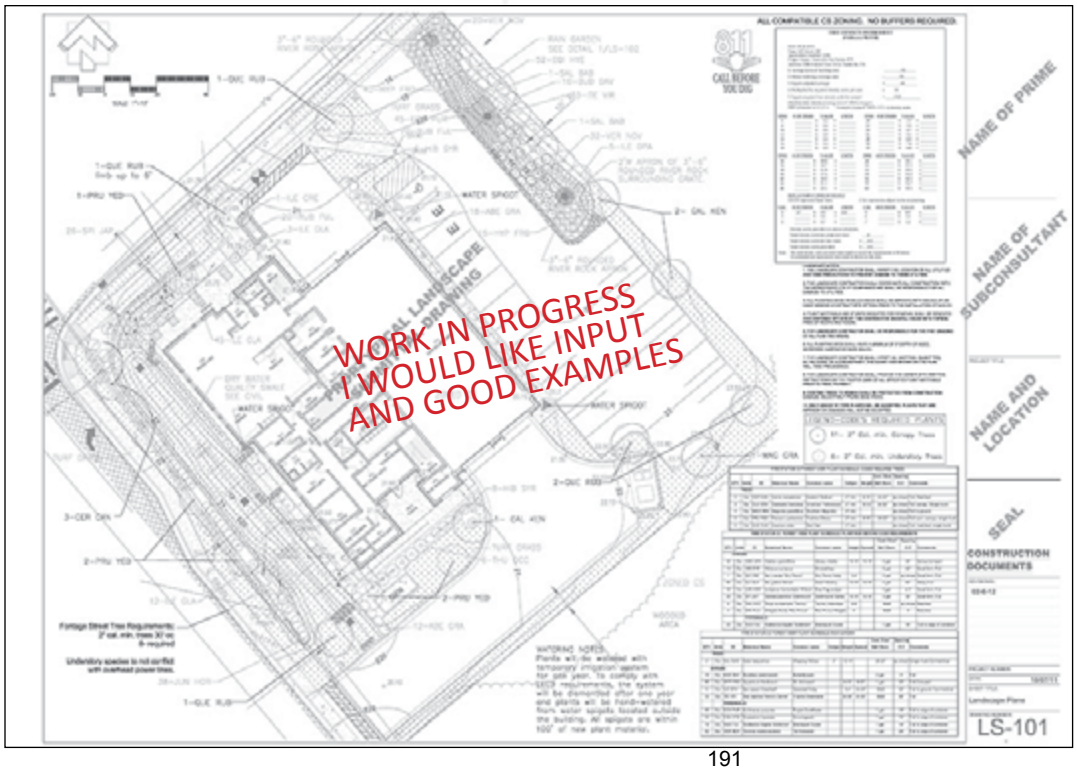

Prototypical Urban Forestry Landscape Submittal Drawing. Click to enlarge.

MAINTENANCE

SECTION THREE

Anyone involved in landscape maintenance should adopt a **Landscape Management Plan (LMP)** to ensure that the landscape will be successfully established and continue to function well over time.

Sites that are developed under a grading permit will have a Long Term Maintenance Plan (LTMP) that identifies the specific requirements for maintenance of the stormwater features. The LTMP should include a landscape plan identifying the plants required in Bioretention areas, Green Roofs, and Water Quality Swales. This Plan should be used for plant replacement unless other species are approved by Metro Water Services. The LTMP is recorded at the Register of Deeds.

A. LANDSCAPE MANAGEMENT APPROACH

The landscape is designed to:

- Provide a **pedestrian friendly,** enjoyable outdoor environment for users and an aesthetic amenity for the city, nearby residents and passers-by.
- Ensure **public safety** for users. Sight lines are maintained on all sides of the site, with low shrubs and open, limbed-up trees.
- Protect the **health** of workers, and users, as well as the environment, by minimizing use of pesticides (herbicides, insecticides, fungicides, and rodenticides).
- **Low maintenance** plant selection emphasizes native plants and hardy ornamental cultivars to use less water and prevent pests and the use of harmful chemicals.
- Pest, weed, and disease problems that arise are managed through **"Integrated Pest Management" (IPM).**

GLOSSARY

Mulching Mowing or Grasscycling- Mower chops clippings finely and blows mulch down into turf to decompose and feed soil.

Integrated Pest Management (IPM)- Is an approach to pest control [weeds, insects, and diseases] that uses regular monitoring to determine if and when treatments are needed, and employs physical, mechanical, cultural, and biological tactics to keep pest numbers low enough to prevent intolerable damage or annoyance. Toxic chemical controls are used as a last resort.*

Shearing- Involves using a hedge trimmer to cut plants in an even geometric shape.

Topdressing- is a method of adding compost, mulch, loam, peat, or a combinations of these things, as improvements to the soil, or for leveling existing lawns. It should be compatible with your existing soil needs.

Organic Bridge Fertilizer- Synthetic organic slow-release nitrogen (urea) blended with natural organic fertilizers (manure, plant, animal or fish by-products) to give it a variety of nitrogen levels and release responses.

Aeration- the process of using mechanized equipment to puncture the soil with spikes (spike aeration) or remove 1" x 2" cores of soil from the ground (core aeration). It is done on turf areas to reduce compaction, reduce thatch buildup, improve infiltration and improve seed contact with the soil.

Vertical Mowing-A high-speed machine with vertically rotating blades that slices into the turf to reduce thatch or improve soil aeration.

ET-Based Watering- uses the scientific principles of evapotranspiration (ET) to determine a plants true watering needs. ET is a measure of the amount of water loss from soil evaporation and plant transpiration. Compensating for rates of daily evapotranspiration is critical to delivering precise irrigation schedules.

Blowout- Completely draining an irrigation system to prevent freeze damage during winter.

Crown Reduction- Pruning methods used to reduce the height and/or spread of the crown of a tree by the removal of the ends of branches while maintaining the tree's natural shape as far as practicable

*Daar, Olkowski & Olkowski: IPM Training Manual for Landscape Gardeners, 1992

Maintenance continued

B. LANDSCAPE MANAGEMENT SCHEDULE

See SECTION THREE-MAINTENANCE for definitions and specific practices required by this Landscape Management Plan.

January:

- * Prune any tree branches that interfere with public safety or sight lines. Prune all street trees yearly to encourage strong upward growth. Do not top trees.
- Mulch mow all turf areas once per month.
- * Clean Permeable Paving

February:

- * Apply granular fertilizer around trees in late February. Make application prior to a moderate rainfall so the rain will wash the fertilizer in. Do not fertilize swale plantings. (See "Fertilization", pages 22 & 23, for recommendations.)
- Mulch mow all turf areas once per month.
- Add new mulch to beds where the mulch depth has been reduced to less than 2 inches thick. Mulch not required where shrubs or groundcover completely hide the soil surface from view.
- Prune shrubs as needed to maintain proper shape (natural, touching, not sheared except where specified in pruning schedule).

March:

- * Mulch mow all turf areas once per month.
- * Fertilize all landscape areas except for bioswales and bioretention areas. The fertilization of shrubs/groundcover areas may be eliminated when the plants reach maturity or completely fill the planters, without space between them. Written authorization from the owner's representative is required before the fertilization may be eliminated from the required work.
- Submit receipts to owner's representative as proof of fertilizer purchase.

April:

- * Mulch mow all turf twice per month.
- * Add new mulch to planters where the mulch depth has been reduced to less than 2 inches thick. Mulch not required where shrubs or groundcover completely hide the soil surface from view.
- * Flush out irrigation systems as needed, run and check for proper operation of each valve zone. Test sensors (rain, soil, or weather sensors).
- Remove and clean irrigation line WYE filter screens.
- Clean or replace plugged sprinkler nozzles. Replace plugged drip emitters.
- Replace irrigation controller program back-up batteries.

May:

- * Mulch mow all turf areas weekly.
- * Turn on irrigation system, run and visually inspect for proper zone coverage. Set ET-based, weather or soil sensor-based, or seasonal programs to adjust irrigation up in July-August, and down for May-June and September.
- * Clean Permeable Paving

June:

- Mulch mow all turf areas weekly.
- Prune spring & winter-flowering shrubs as needed to maintain proper shape (natural, touching, not sheared except where specified in pruning schedule).

July:

- Mulch mow all turf areas weekly.

August:

- Mulch mow all turf areas weekly.

September:

- Mulch mow all turf areas weekly.
- Aerate, fertilize and overseed all turf areas. Topdress areas as needed.
- Clean Permeable Paving

October:

- Mulch mow all turf areas weekly.

November:

- Inventory and inspect all plant materials Replace any dead or missing plants subject to the terms of the specifications.
- Mulch mow all turf areas twice per month.
- Have backflow preventer (on irrigation water supply) tested annually by approved plumbing technician.
- Turn off and prepare irrigation system for winter. Make sure backflow preventer is well-insulated or drained prior to first freeze. Blow out pipes using compressed air in areas where freezing could result in breakage. Drain drip irrigation lines as recommended by manufacturer. Any winter damage to irrigation system due to insufficient winterization shall be the responsibility of the contractor to repair.
- * Add new mulch where the mulch depth has been reduced to less than 2 inches thick. Mulch additions are not required where shrubs or groundcover completely hide the soil surface from view.
- Prune shrubs as needed to maintain proper shape.

December:

- Mulch mow all turf areas once per month.

* Asterisk indicate tasks that are priorities on Metro properties.
For maintenance information specific to bioretention features, see page 28 of this document and Metro Stormwater- http://www.nashville.gov/Water-Services/Developers.aspx

Note:
Check irrigation systems monthly during season when in use.

BartsTreeService.com

STOP TREE TOPPING

Topped trees are **NOT SAFER**

New growth is **WEAK** and **HAZARDOUS**

Topping is **UGLY** and **ABUSIVE**

Topping leaves trees open to **INSECTS** and **DISEASE**

Topping **STRESSES** and **STARVES** **the tree shortening it's lifespan.**

Topping is **EXPENSIVE** and **UNNECESSARY**

Plant the **RIGHT TREE** in the **RIGHT SPOT**

Hire a **CERTIFIED ARBORIST** for Crown Reduction or other recommendations

C. LANDSCAPE MANAGEMENT AREAS

C.1. Grounds Maintenance – all outdoor areas

Clean-up:

- Remove biodegradable landscape debris to a yard waste recycling facility, including turf clippings (limited to only those times when mulch mowing is not possible), leaves, branches, annuals, dead plant material, potting soil, etc. Acceptable facilities include composting facilities, topsoil producing facilities or other facilities which utilize yard waste for landscape purposes. No biodegradable material should be disposed of in garbage to land fill sites.
- Residents of Nashville can also dispose of brush and other landscape waste free of charge at **Bordeaux Mulch Facility,** 1400 County Hospital Road.
- All trash and sticks are to be picked up from lawn strips and bed areas prior to mowing.
- A weekly general clean-up program will be performed. The clean-up program shall include a review of all maintained areas for the removal of trash (paper, cans, bottles etc.) and landscape waste such as fallen sticks and limbs.
- All trash and landscape debris shall be removed and disposed of off-site.
- Dog and other animal waste should be bagged and deposited in trash receptacle so that it can not enter the stormwater system.
- Mulch is to be maintained clear of tree bases, building foundations and paved areas, and off utility covers.
- Debris shall not be carried onto patios, entryways or doorways.
- Debris deposited by typical weather occurrences will be cleaned up.
- Sweep patios and sidewalks at least weekly.

Fall leaf removal – September through January

- On a weekly basis remove leaves from lawn areas to prevent heavy build-up and damage to turf by smothering. A single layer of leaves may be mulch-mowed into the turf. Thicker accumulations should be removed.
- Leaves may be raked or shredded by mower and blown into shrub beds for mulch, or accumulated leaves will be raked and/or blown from lawn, plants, high maintenance bed areas and collected and removed from property and disposed of off-site.
- Residents of Nashville can also dispose of brush and other landscape waste free of charge at **Bordeaux Mulch Facility,** 1400 County Hospital Road.
- Sweep leaves from patio at least weekly, to avoid clogging paver pores.
- Never put leaves into stormwater drains. They can collect and block the system and create excessive nutrient loading of the water.

C.2. Pruning and Plant Care– Trees, Shrubs and Groundcovers

C.2.1 Trees

- Trees shall be maintained in a healthy, vigorous growing condition, free from disease and large concentrations of pests.
- Prune trees only to remove dead, diseased, broken, dangerous, or crossing branches, and as required as follows:
- Prune in accordance with generally accepted standards for proper pruning by a certified arborist.
- Discard all tree trimmings off-site using a legal method such as Metro Brush collection http://www.nashville.gov/Public-Works/Neighborhood-Services/Yard-Waste-Composting/Brush-Yard-Waste-Collection/Brush-Routes.aspx or licensed landfill.
- Trees found to be dead or missing due to lack of maintenance, shall be replaced with trees of identical or approved species at the landscape maintenance contractor's expense. Replacement trees shall be approved for size and quality by the owner's representative before planting.
- If tree stakes are necessary, remove them after one growing seasons. Check tree ties to adjust and loosen as needed after the first growing season. Remove stakes from site and dispose of by a legal method. Recycle used stakes if possible.

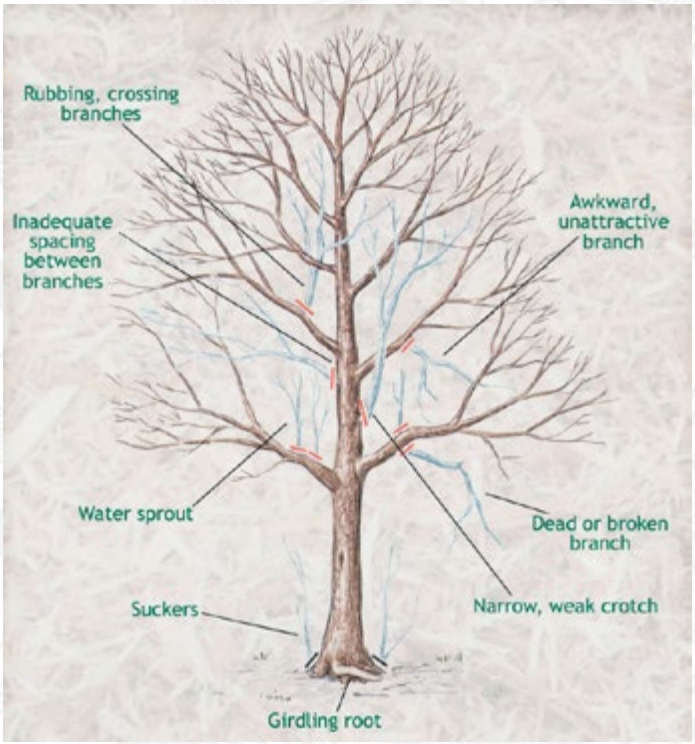

Lancotree.net

Proper Pruning for Safety and Longevity

- Once a year as needed, prune all trees to encourage a high-branching structure. Remove all non-structural branches between the ground and a point two-thirds the tree's total height (for tall trees don't remove branches higher than 20' [6 m] above the ground). Exception to the above: trees planted for screening purposes, shall not be pruned except as needed to remove dead, diseased, broken, dangerous, or crossing branches.
- Do not remove more than one-fourth of the canopy at any one time.
- All sucker growth from trunk and base of trees shall be removed monthly or as required up to twelve feet (12') from the ground to maintain a clean appearance.
- The cutting blades on pruning shears, clippers, blades, saws, etc. shall be sterilized after pruning each tree to minimize the possibility of spreading disease. When pruning trees known or suspected to be diseased, cutting blades shall be sterilized (with 10% bleach solution or other approved) after each cut.
- A vertical clearance of 114 inches (9'-5") is required above all parking spaces. A vertical clearance of eight feet (8') is required above all walkways and fourteen feet (14') over streets. Trim trees to remove all limbs within these areas keeping in mind the two-thirds rule.

An excellent publication on pruning is UT Extension PB1619- Best Management Practices for Pruning Landscape Trees, Shrubs and Groundcovers

Vegetation in a designated water quality buffer should not be pruned. Please see Section 6.9.6 of Metro's Stormwater Management Manual or contact MWS at 615-880-2420 for additional information.

http://www.nashville.gov/Water-Services/Developers.aspx

C.2.2 Shrubs

- Shrubs shall be kept in a healthy, vigorous condition, free from disease and large concentrations of pests.
- Shrubs shall be pruned monthly as needed to remove branches that are dead, broken, extending beyond the face of curbs or sidewalks. Allow the shrubs to grow in their natural form to their mature sizes.
- Shrubs uniformly planted shall be pruned so as to encourage a continuous planting where individual plants are not identifiable.
- Prune to encourage a dense, continuous planting, with a natural shape that is wider at the base and narrower at the top and branches reaching fully to the ground.
- All other shrubs shall be pruned only as required for safety, visibility, and plant health, and allowed to develop into the natural shapes expected of the plant variety. Do not shear shrubs into topiary (shapes) unless specifically instructed.
- Allow shrubs two (2) months to rejuvenate following a hard frost prior to pruning or replacing.
- Any shrub found to be dead or missing shall be replaced with plant material of identical or approved species at the landscape maintenance contractor's expense, unless the loss was due to excluded damage.
- When pruning shrubs known or suspected to be diseased, the cutting blades shall be sterilized after each cut.

C.2.3 Vines

- Vines shall be maintained as per "Shrubs" above. They shall be encouraged to climb in appropriate areas (example: designated by support wires around the southeast corner of the building). They shall be pruned to keep free from window recesses and shall climb no higher than the first story (12').

C.2.4 Groundcovers

- Groundcover shall be maintained in a healthy, vigorous growing condition.
- Any groundcover found to be dead or missing due to lack of maintenance, shall be replaced with plant material of identical species at the landscape maintenance contractor's expense.

- Keep groundcover trimmed to edge of sidewalks, curbs, and paved areas on a monthly basis or as needed. Do not create vertical edges when pruning groundcover. Cut the edges at an angle /--\ for a more natural appearance and healthier plants. Prune so groundcover just overlaps adjoining paving; an open mulch strip here allows weeds to take hold and trash to accumulate.
- If regular foot traffic through a planter is preventing the groundcover from reaching full coverage of the soil, contact the owner's representative to discuss options for redirecting the foot traffic. Consider installing pavers, stepping stones, a concrete walk, a gravel path, and/or barriers to redirect pedestrians.

C.3. Fertilization - Trees, Shrubs, Vines and Groundcovers

- To prevent runoff of nutrients, do not fertilize plantings in bioswale and bioretention areas.
- Fertilizers shall be either organically derived or slow-release synthetic products, to minimize water pollution and feed plants over a longer period of time.
- Granular slow release or organic fertilizer shall be 5-5-5 formulation or similar, applied per label rate for plant type. Water immediately after applying to move the fertilizer into the soil and wash the fertilizer off of plant surfaces.
- When applying granular fertilizers to drip-irrigated areas, the fertilizer must be washed in by hand or rainfall before turning on the drip system. Running the drip system immediately after application will push the fertilizer away from the emitters, resulting in a high concentration of fertilizer at the edge of the wetted zone. This highly-concentrated fertilizer can kill or damage plants. It is recommended that granular fertilizers be applied to drip-irrigated areas only in early spring, just prior to a moderate rainfall.

C.4. Mulch - Trees, Shrubs, Vines and Groundcovers

- Maintaining a deep layer of mulch greatly reduces the labor and materials needed to control weeds, reduces water use, and helps the plants stay healthy.
- Add additional mulch regularly to maintain a layer no less than 2 inches (5 cm) deep or higher than 4 inches (10 cm) at all times in shrub beds, tree rings, and beds where plants have not yet closed in over soil surface. Decomposition of organic mulch is considered normal wear and tear, and replacement of decomposed mulch is required seasonally. Mulch is not required in areas where plant foliage completely covers the soil surface, such that the soil is not visible through the foliage. Any mulch found outside plant beds shall be returned to the plant beds on a weekly basis.
- Mulch shall be uniform in color and appearance, and free of weeds, sticks or trash. Mulch may be decomposed hardwood, pine straw or leaves. When replacing, use a mulch product that is similar in appearance to that already at the site.

TN Gardner

NO MULCH VOLCANO

More is not always better.
Mulch too deep creates a barrier for water and air getting to the roots.
3"-4" is ideal and will hold moisture longer than soil.

C.5. Turf Care

C.5.1. Mowing - Turf

- Mowing schedule: Mow weekly during active growth periods (April-November) and at least once a month during winter. Keep mower blades sharp.
- Clippings should always be left on lawn areas ("mulch-mowing" or "grasscycling"), except if this will create a large surface buildup, for instance if saturated soft soils have prevented mowing for several weeks in spring and the grass is very tall. Grasscycling returns about 2 lb. nitrogen per 1000 sq. ft. per year, and improves resistance to drought damage and weed invasion.
- Modern "mulching" mowers are preferred because they chop clippings finely and blow the resulting mulch down to ground level, leaving a clean surface which is preferable, especially around building entrances where track-in can be a problem. Effective mulching requires about 20% more engine power, and it may be necessary to slow down in heavy areas or wet weather to get the best mulching

results. For these reasons, equipment that converts easily from mulching to side-throw (leaving clippings on surface) is the most adaptable to varying conditions and mowing schedules.

- Mowing height: 2 to 4 inches high depending on the species of grass.

Recommended Mowing Heights

Kentucky Bluegrass 2-3 inches
Tall Fescue 2-3 inches
Perennial Ryegrass 2-3 inches
Fine Fescues 2-3 inches
Bermuda grass 0.5-1.5 inches
Zoysia grass 1-2 inches
Buffalo grass 3-4 inches

- Mowing frequency: to cause the least stress on the grass plant, mow often enough to remove only one-third of the blade length (e.g., when the grass is 5" high mow it down to 4"). Also, mow un-irrigated summer-dormant turf regularly enough to remove weed seed heads before they mature. Start mowing in late winter as soon as grass begins to grow. On most lawn areas these rules will result in mowing every 5-7 days through the height of the spring growth spurt, tapering to weekly on irrigated summer lawn or 10 days to 2 weeks on dormant lawn, weekly through the fall growth spurt, and once a month during winter. Avoid over-fertilization and soluble "quick release" fertilizers to reduce mowing frequency.

C.5.2. Fertilization - Turf

- Natural organic fertilizers or "bridge" (organic plus slow-release synthetic) fertilizers shall be used. Soluble fertilizers, though less expensive, wash off site, volatilize, require more frequent application, and are toxic to beneficial soil life, so tend to be more expensive over time.
- Mid to late fall applications are the key to building carbohydrate reserves in the grass root system over the winter. Early spring applications should be avoided because they promote rapid top growth (requiring more mowing) and can exhaust stored nutrient reserves. Spring applications should be in late spring.

C.5.3. Aeration and De-thatching - Turf

- While aeration is most important on high-use areas (such as building entrances) any area should be considered for annual or more frequent aeration if it shows signs of thin turf, weed invasion, poor irrigation penetration, or soil compaction.
- Thatch buildup (beyond the 1/2 inch that is healthy) is usually a sign of over-fertilization, over use of broadcast pesticides, over-watering, soil compaction, or other causes of diminished soil biota to break down thatch. Excess thatch prevents water penetration and promotes shallow rooting. Good maintenance practices will generally prevent thatch buildup, but where present it should be reduced by regular aeration or a vertical mowing (de-thatching), followed by adjusting cultural practices to prevent recurrence.

C.5.4. Overseeding - Turf

- In addition to aeration, spring or fall lawn renovations should include overseeding of thin or weed infested areas, or entire areas subject to heavy wear. This is a key weed control practice.
- Select certified seed appropriate for the site (perennial rye for sport lawn, rye and fescue blends for general lawn: contact the Cooperative Extension Service for site-adapted varieties, or buy from a reputable local supplier).
- Generally overseeding is practiced after aeration and before topdressing. A slice-seeding machine allows seed to be placed in the ground at the end of the dry season to await fall rains, and greatly improves seed germination and survival.

C.5.5. Topdressing - Turf

- After aeration and overseeding, high-use or worn lawn areas should be topdressed in spring or fall for greatest improvement.
- General lawn should be topdressed with pure compost or a compost-sand mixture, 1/4 to 1/2 inch thick, to improve both drainage and soil fertility. Use weed-free mature compost from a reputable supplier, screened to 3/8 inch minus particle size. Dragging or raking after application can help get compost down into the aeration holes and break up aeration cores and compost clumps.
- Take soil plugs annually to verify that the compost is being incorporated into the soil profile below the aeration depth by earthworms and other soil biota, rather than accumulating on the surface where it could limit water infiltration. (This is a possible problem in cases of low soil biota due to overuse of fertilizers or pesticides, poor drainage, or conditions of acidic or compacted soils. Correct these problems to improve compost incorporation.)

IPMPro

The first Integrated Pest Management mobile app for landscape professionals has been developed that includes major horticultural practices and disease and insect recommendations.

IPMPro will streamline pest management decision-making, employee training, and will make complying with state pesticide record keeping regulations easy.

The mobile app is available for iPhone, iPad, and Android.

http://www.ipmproapp.com/

D. INTEGRATED PEST (WEED, INSECT, AND DISEASE) MANAGEMENT

Definition: "Integrated Pest Management, or IPM, is an approach to pest control [weeds, insects, and diseases] that uses regular monitoring to determine if and when treatments are needed, and employs physical, mechanical, cultural, and biological tactics to keep pest numbers low enough to prevent intolerable damage or annoyance. Least-toxic chemical controls are used as a last resort."

Daar, Olkowski & Olkowski: IPM Training Manual for Landscape Gardeners, 1992

D.1. Weed Control for Trees, Shrubs, Vines and Groundcovers

- Weeds in planted areas, sidewalks, curbs, gutters, or pavement shall be removed or killed weekly as the weeds emerge. Weeds shall be removed (not just killed) if they are larger than 2 inches (5 cm) in height or diameter. Dispose of weeds off-site. The cost of all weed control work shall be included in the contract price for landscape maintenance. Regular maintenance of the mulch layer will help minimize weeds in shrub and groundcover areas.
- Contractors are strongly encouraged to use Integrated Pest Management techniques for controlling weeds. Techniques include mulching, pulling, allowing plantings to grow densely and shade ground, heat and hot water controls. If herbicides must be used, choose the least toxic available and spot apply on weeds. Pre-emergent herbicides are not encouraged – maintaining a proper mulch layer combined with mechanical weeding is as effective.

D.2. Weed, Insect, and Disease Control for Turf

- Weed invasion can be effectively prevented or reversed by growing dense lawn, through the above recommended practices. Tolerate some broad-leaved plants in lawn areas. Identify problem (invasive) weeds and target only those species.
- Control weeds in turf by removal where practical (long-handled weed-pullers do this quickly), and remove them regularly before they go to seed. If weeds have over-run an area, spot-application of the least-toxic herbicide is permitted.
- No broadcast herbicide or "weed-and-feed" products may be applied.
- Moderately fertilized turf on well drained organic-rich soils rarely has serious disease problems. Correcting poor soil conditions or cultural practices (like over-watering or over-fertilization) will prevent diseases.

D.3. General IPM Steps and Methods

IPM Steps Include:

1) Prevention first: plant vigorous, pest-resistant, site-adapted varieties. Plan cultural practices to minimize pests (watering, mulching, pruning, etc.).
2) Identify/know the pest (weed, etc.) life cycle.
3) Set action thresholds – tolerate some damage.

4) Monitor regularly (keep records of monitoring).
5) When pests exceed threshold, use control method with the least non-target impact. (Try cultural, physical, or biological methods first. As a last resort, use spot applications of least toxic chemical.) Only treat when the pest is most vulnerable and its natural enemies are in their least susceptible life stage.
6) Keep records of control methods and results, evaluate, and adapt cultural practices.
7) Replace problem plants with more pest, disease, and weed-resistant varieties.

Weed Control Methods – General Guidelines:

- Crowd out weeds with dense healthy plantings, ground covers and shade canopies.
- Accept a few weeds – target the problem ones.
- Mulch beds in fall, winter, or early spring.
- Control weeds before they go to seed.
- Hoe, pull, mow, or till (mulch makes hoeing easier).
- Don't over-fertilize – it promotes weeds and pests.
- Spot apply the least-toxic chemical or cut-and-paint stems with systemic herbicides to minimize non-weed impacts.
- If a pesticide must be used, it should only be applied by a licensed pesticide applicator (including users of "weed & feed," or even low-risk herbicides like vinegar) who is licensed by State law, see http://www.tn.gov/agriculture/regulatory/aip.shtml

E. ANIMAL CONTROL

Under Metro Nashville ordinance 8.20.170 it is illegal to kill or attempt to kill any bird, game or non-game (except English sparrows), squirrels or any other animal, in any of the public parks (including the Custom House Park and the Capitol Hill Park) or in any of the cemeteries, public or private, within the urban services district.

There are a few things you can do to minimize unwanted animals such as eliminate standing water and areas in which the pest animals can feed, keep trash cans covered and areas clean and never feed pest animals.
Some remedies specific to birds are:

- Trim trees away from structures; and prune those that attract pest bird roosting.
- Add spikes or sticky glues to ledges where pest birds roost.
- Clean gutters to prevent standing water.
- If pest birds are feeding on the food in feeders set out for desirable birds, try changing the type of food used or stop using feeders during warm weather.
- Seal openings through which the smaller pest birds can enter. Sparrows can enter through gaps as small as 3/4 inch, and starlings through one-inch openings.
- Block vent, eave, and loft openings with plywood, 1/4-inch wire mesh, or netting.
- Netting – attaching nylon or plastic netting to the bottom of rafters will close off this area to birds, who are attracted to such areas for nesting and roosting.
- Other methods include repellents, live traps, nest removal.
- Methods with limited effectiveness include: balloons, plastic snakes, or fake owls, sound and flashing light devices.

It is critical that animals be positively identified; all federal, state, and local regulations be followed; and all products be used only according to their labeled directions.

F. IRRIGATION

F.1 All Areas

- Irrigation system should be managed by trained staff or irrigation specialist.
- Monitor the moisture levels with moisture meters around all plants including, but not limited to trees, lawn, shrubs, perennials, groundcovers and annuals.
- Report problems (including brown spots or saturated areas) to on-site management during normal maintenance visits.
- Fix irrigation system leaks and broken or misdirected heads as needed on every site visit.

KENTUCKY BLUEGRASS LAWN NEEDS ABOUT 1.5" OF WATER PER WEEK		
MAY -	1.2"	Per Week
JUNE -	1.5"	Per Week
JULY -	1.5"	Per Week
AUG -	1.2"	Per Week
SEPT -	1.0"	Per Week
OCT -	0.67"	Per Week

- Hand water any ornamental plants not under irrigation as needed.
- Adjust spray heads in shrub beds as plants grow and block spray pattern. Relocate or replace heads with higher spray pop up or put on risers.
- Hire a certified landscape irrigation auditor to evaluate systems performance efficiency in precipitation rates and distribution uniformity.

F.2 Spring start-up

- Prior to system start up, have the backflow checked by a licensed backflow inspector.
- Open the main valve(s), inspect and adjust all sprinkler heads, re-program and check battery backup in controller, and troubleshoot the entire system.
- Test sensors (rain, soil moisture, weather) and zone coverage while running.
- Set ET-based, seasonal, or weather–based manual or automatic programs. Post spring/summer/fall schedules (runtimes x days / zone) and train staff as needed to monitor through season.

Checks and repairs

- Once per month during activation inspect entire irrigation system. Irrigation inspections shall include the following:
- Activation of each zone to inspect for valve function, lateral breaks, damaged heads, coverage or anything else that would indicate any malfunction of the irrigation system.
- Adjust irrigation heads for proper coverage.
- Adjust automatic controller to establish frequency and length of watering periods for seasonal requirements and water restrictions.
- Runoff of water from irrigation systems onto streets, sidewalks, stairs, or into gutters is not permitted. Immediately shut down the irrigation system and make adjustments, repairs, or replacements as soon as possible to correct the problem.

Activerain.com

Reduce water waste.
Adjust heads to eliminate overspray.

- After repair, remove damaged head and let water run for a few minutes until dirt and debris is flushed.
- Do not over-water plantings. Use multiple-start times and short run times to prevent runoff. Drip systems should be left on for sufficient time to allow for saturation of the root zone. Shorter runs with drip irrigation do not provide sufficient water penetration for healthy root development. Avoid multiple-start times with drip systems if possible. Do not allow run-off from any irrigation.
- Rain sensors/weather sensor/soil moisture sensors: Install rain shut-off devices on all systems.
- Maintain the irrigation system, including cleaning of filter screens yearly or more often as needed, and flushing pipes.
- Drip irrigation systems need periodic flushing to remove sediment. Systems shall be flushed at least once a year. Open ends of drip lines and run for at least 15 minutes at full flow to flush. It may be necessary to install flush outlets in order to flush the drip system.
- Watch for leaks and misting from sprinkler heads. Misting may indicate high water pressure and may need a pressure regulator. Pressure regulator heads are one option or install regulator at water meter or valve box.
- Heads that are on the bottom of a slope may weep and cause erosion. Install check valves or heads with built in check valves where appropriate.

F.3 System Repair

- Regardless of the cause of damage, take immediate action to prevent further damage by shutting off the damaged part of the irrigation system and commencing with hand watering as needed. The following items are considered to be minor repairs:
  - damaged or clogged sprinkler nozzles,
  - adjustment of sprinkler patterns or arcs,

GREEN ROOF INCENTIVE

Metro Nashville has a Green Roof Ordinance to give monetary credit up to $500,000 for installing Green Roofs within the combined sewer area.

http://www.nashville.gov/Water-Services/Developers/Low-Impact-Development/Green-Roof-Rebate.aspxordinances/term_2011_2015/bl2012_218.htm

adjustment of sprinkler position (raise, lower, or straighten sprinkler head), replacement of clogged, broken, or missing barbed-style drip emitters, replacement or repositioning of drip distribution tubing smaller than 1/2 inch or 15 mm diameter.

- Any replacement of irrigation system components shall be made with materials of the same manufacturer and model as the original equipment.
- All repairs to the system shall be identical to the original installation, unless approved in advance by the owner's representative. If a change to the installation will result in lower future maintenance costs, less frequent breakage, or an increase in public safety, request authorization to make the change from the owner's representative.
- For safety, do not install sprinklers on risers above the ground level, even if the risers are flexible. Always use spring-operated, pop-up style, sprinkler heads. Sprinkler heads are available with pop-up heights up to 12 inches (30 cm) above ground level. If the existing sprinklers are mounted on above-ground risers, the replacements shall be pop-up type sprinklers. No exceptions.
- Annually submit recommendations for changes to system that would improve water efficiency while meeting the plants' needs.

F.4 Winterization

- Completely drain the sprinkler system (blowout) to prevent freeze damage to underground pipes and sprinkler heads. Close all valves and shut down the controller(s) for the winter.

Case study of Bioswales at Metro's Richard H. Fulton Campus

G. SPECIAL LANDSCAPE AREAS

Street trees and R.O.W. plantings

- These areas have additional stress of vehicular, pedestrian and dog traffic and are most often not irrigated. To avoid compaction and to prolong tree life, it is necessary to keep underplantings vigorous and healthy. If low shrubs or groundcovers are damaged, replace them immediately to prevent further damage.

G.1 Green Roof

- Weeds may be introduced by birds or wind-dispersed seeds. This area will require low but ongoing maintenance after it is established, and may need frequent weeding until desired vegetation covers the planted surface.
- Green roofs are exposed to extremes of wind, sun, and temperature. The green roof planting plan uses hardy, drought-resistant plants, but some initial irrigation will be required in this harsh microclimate. Manual watering about every two weeks will be necessary during the first two summers after installation.

G.2 Bioretention Areas

- Swales and rain gardens, designed to capture and hold roof runoff, will not maintain optimal drainage rates if soils become compacted. Minimize foot traffic in this area, although occasional walking for maintenance is fine.
- In addition to preventing weeds, regular applications of mulch will maximize the swale's ability to capture and break down contaminants. In order to prevent runoff of excess nutrients, rain garden plantings should not be fertilized. Plant selection, a rich soil mix, and regular mulching should provide sufficient nutrients to plants in these areas.

G.3 Permeable Pavement

- Permeable pavement requires periodic maintenance to avoid getting clogged with debris over time. The rate of

sediment deposition should be monitored and maintenance should be scheduled accordingly. Depending on the type of pavement, mechanical sweeping, vacuum sweeping, or pressure washing can be used to clean the pavement. See EPA-Stormwater Fact Sheet- Porous Pavement. Similarly, avoid using salt and sand on this area in the winter. In general, permeable pavement does not tend to accumulate ice since it does not hold puddles.

- Additional gravel may occasionally be necessary to refill the joints between permeable pavers. Gravel supplements are needed if the gravel channels drop more than 1.5" below the paver surface.

G.4 Playgrounds

- All playground areas and equipment should be inspected for excessive wear, deterioration, and potential hazards. Frequency of inspections will depend on usage, age of equipment and climate. Annual inspection should be the minimum.
- All repairs and replacements of equipment parts should be completed following the manufacturer's instructions.
- User modifications, such as loose-ended ropes tied to elevated parts, should be removed immediately.
- Consult the manufacturer for maintenance schedules for each piece of equipment. Based on these schedules, a maintenance schedule for the entire playground can be created. This routine maintenance schedule should not replace regular inspections.
- Displaced loose-fill surfacing materials particularly in areas of the playground most subject to displacement (e.g., under swings and slide exits)should be raked back into place so that a constant depth is maintained.
- Proper depth levels can be facilitated by marking ideal surfacing depths on equipment posts.
- Records of all maintenance inspections and repairs should be retained.

H. OPERATIONS AND STAFF TRAINING

Although a landscape department operations must be worked out on a case-by-case basis, it will need regular training in areas such as safety, procedures and equipment. This staff support should be included in planning and budgets.

ENDNOTES:

1. Sustainable Sites Initiative (SITES) http://www.sustainablesites.org/
2. Erosion Control in the Landscape-http://www.lowes.com/cd_Controlling+Erosion+in+the+Landscape_1259068825_
3. Soil for Urban Tree Planting, E. Thomas Smiley, Ph.D.- Bartlett Tree Research Laboratories Technical Report
4. SULIS-Sustainable Urban Landscape Information Series- http://www.sustland.umn.edu/index.html
5. Preparing Landscape Management Plans for Seattle Green Factor Compliance- Seattle Green Factor- Seattle Department of Planning and Development
6. Controlling Pest Birds-What Works and What Doesn't, Lisa Jo Lupo- http://pestcontrol.about.com/od/diypestcontrolprevent/a/Controlling-Pest-Birds.htm

RESOURCES

METRO GOVERNMENT:
Metro Purchasing- http://www.nashville.gov/bob/archive.asp
Metro Contactor lists-Construction, Design and Small and WBE list available at:
iProcurement System- http://www.nashville.gov/finance/procurement/iprocurement.aspx
Nashville Open Space Plan for Davidson County- http://www.nashville.gov/sustainability/
Metro Stormwater LID- http://www.nashville.gov/stormwater/LIDResources.asp
Zoning Landscape- http://library.municode.com/index.aspx?clientId=14214\
Metro Development Services- http://ds.nashville.gov/
Metro Health Dept. Septic System Approval-http://health.nashville.gov/envSepticSystemOverview.htm
Metro Historic Zoning Comm- http://www.nashville.gov/mhc/
Metro Planning Comm-http://www.nashville.gov/mpc/
Metro Codes-http://www.nashville.gov/codes/services.asp
Metro Public Documents-http://www.nashville.gov/codes/public_docs.asp
Metro Tree Canopy Assessment-http://www.nashville.gov/pw/beautification/trees/canopy.asp
Metro Tree planting in ROW-http://mpw.nashville.gov/plan/public/TreeAgreement.aspx
Clean Water Infrastructure- http://www.nashville.gov/water/cwip/
Mayor's Office of Environment and Sustainability- http://www.nashville.gov/sustainability/
SOCKET- Nashville Unplugged- http://goyonder.com/socket/

STATE GOVERNMENT:
TN Ag Dept.- http://www.tn.gov/agriculture/index.shtml
TDEC- TN Dept. of Energy and Conservation- http://www.tn.gov/environment/
U.T. Soil, Plant and Pest Center, Ellington Agricultural Center- http://soilplantandpest.utk.edu/

FEDERAL GOVERNMENT:
EPA's Open Space Development- http://www.epa.gov/owow/NPS/ordinance/openspace.htm

SPECIFICATIONS:
MasterFormat- http://www.masterspec.com/structural_civil_landscape_specifications.aspx

PLANTS:
USDA; A Management Guide for Invasive Plants in Southern Forests-
http://www.srs.fs.usda.gov/pubs/36915 USDA Invasive plants of Tennesse- http://www.invasivespeciesinfo.gov/unitedstates/tn.shtml
TVA- Riparian Restoration- http://www.tva.gov/river/landandshore/stabilization/index.htm
TN-EPPC-TN Exotic Pest Plant Council- http://www.tneppc.org/pages/landscaping
(ANSI) 2004 American Standard for Nursery Stock-http://www.anla.org/index.cfm?area=&page=Content&categoryID=260
ANSI A300 (Part 6)-2012 Planting and Transplanting- http://www.tcia.org/business/business-resources/ansi-a300/part-6
NES Tree Trimming-http://www.nespower.com/vegmgmt.html

Urban Forestry:
Human Dinemsions of Urban Forestry and Urban Greening- http://www.naturewithin.info/index.html
Pacific SW Research Station- http://www.fs.fed.us/psw/programs/uesd/uep/
USDA Urban Forests and Climate Change- http://www.fs.fed.us/ccrc/topics/urban-forests/

LOW IMPACT DEVELOPMENT:
Rain Gardens for Nashville- http://www.raingardensfornashville.com/
Metro Stormwater LID- http://www.nashville.gov/stormwater/LIDResources.asp
Green Infrastructure Design using Low Impact Development HYPERLINK DOCUMENT
EPA- LID- http://water.epa.gov/polwaste/green/index.cfm
LEED- https://new.usgbc.org/leed
SITES- http://www.sustainablesites.org/
Ballard Roadside Raingardens- http://www.seattle.gov/util/MyServices/DrainageSewer/Projects/SewageOverflowPrevention/CSOReductionProjects/BallardBasin/BallardRoadsideRaingardens/
Case Studies- http://www.asla.org/stormwatercasestudies.aspx

LOW IMPACT DEVELOPMENT: continued
Greenroofs- http://www.greenroofs.org/
Sustainable communities- http://www.cnt.org/
NYC Green Infrastructure Plan- http://www.nyc.gov/html/dep/html/stormwater/nyc_green_infrastructure_plan.shtml
Portland OR Environmental Services http://www.portlandoregon.gov/bes/34598
ASLA-http://www.asla.org/ContentDetail.aspx?id=24076
EPA-http://www.epa.gov/owow/NPS/lid/section438/

STREET DEICING
Maryland Dept of Enviroment- http://www.mde.state.md.us/programs/Water/StormwaterManagementProgram/SedimentandStormwaterHome/Documents/www.mde.state.md.us/assets/document/WINTER_2.pdf
Milwaukee Riverkeeper- http://milwaukeeriverkeeper.org/content/winter-recipe-low-salt-diet-its-our-rivers
Chesapeake Stormwater Network- http://chesapeakestormwater.net/2009/01/winter-road-salt-and-the-chesapeake-bay/
Stormwater Journal- http://www.stormh2o.com/SW/Articles/Salt_No_Easy_Answers_8162.aspx
Street Deicing Storage & application:
EPA: http://www.epa.gov/safewater/sourcewater/pubs/fs_swpp_deicinghighway.pdf
Michigan:http://www.semcog.org/uploadedFiles/Programs_and_Projects/Water/Stormwater/Municipal_Training/Streets_and_Parking_Lots/Road%20Salt%20Application.pdf

LOCAL NATIVE PLANT SUPPLIERS:
Growild- http://www.growildinc.com/
Nashville Natives- **http://nashvillenatives.com/**
Gardens of Babylon- http://www.gardensofbabylon.com/
Bates Nursery- http://www.batesnursery.com/
Moore & Moore West- http://www.mooreandmoore.com/

MATERIALS/GREEN PRODUCTS:
Belgard Permeable Pavers- http://belgard.biz/environmental-pavers-aquaroc.htm

Prepared for:
Metro Nashville Public Works-Landscape Coordination Program
and Metro General Services- Building Operations and Support Services

By:

ASHWORTH *ENVIRONMENTAL* DESIGN,LLC 2013

APPENDIX

SECTION FIVE

Landscape Maintenance Calender

TASK- Times/mo	JAN	FEB	MARCH	APRIL	MAY	JUNE	JULY	AUG	SEPT	OCT	NOV	DEC	TOTAL
Landscape Beds													**VISITS**
Prune		1				1					1		3
Mulch		1									1		2
Fertilize		1											1
Weed				1	1	1	1	1	1	1	1		8
Lawn													
Mow & clean-up	1	1	1	2	4	4	4	4	4	4	2	1	32
Fertilize			1						1				2
Overseed									1				1
Aerate									1				1
Irrigation													
Activate				1									1
Winterize											1		1
Inspection				1	1	1	1	1	1	1	1		8
Planters													
Mulch				1									1
Overall													
Prune trees	1												1
Fertilize trees		1											1
Replacement											1		1
Clean-up	4	4	4	4	4	4	4	4	4	4	4	4	48
Leaf Removal	4								4	4	4	4	20
Permeable Pavement													
Clean, Inspect Joints	1				1				1				3

Installation Details

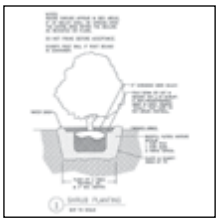

Shrub Planting Detail

Tree Planting Detail

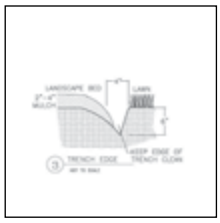

Trench Edge Detail

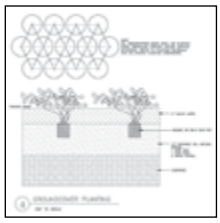

Groundcover Planting Detail

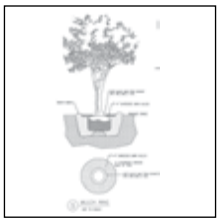

Mulch Ring Detail

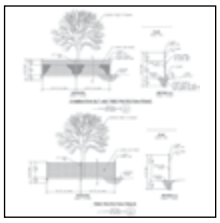

Tree Protection Fence Detail

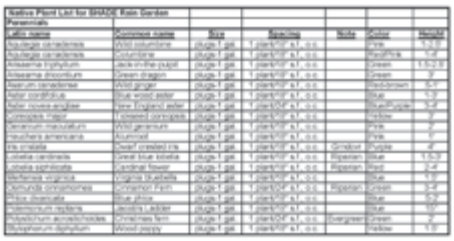

Native Plant Schedules

WORK IN PROGRESS
I WOULD LIKE INPUT
AND GOOD EXAMPLES

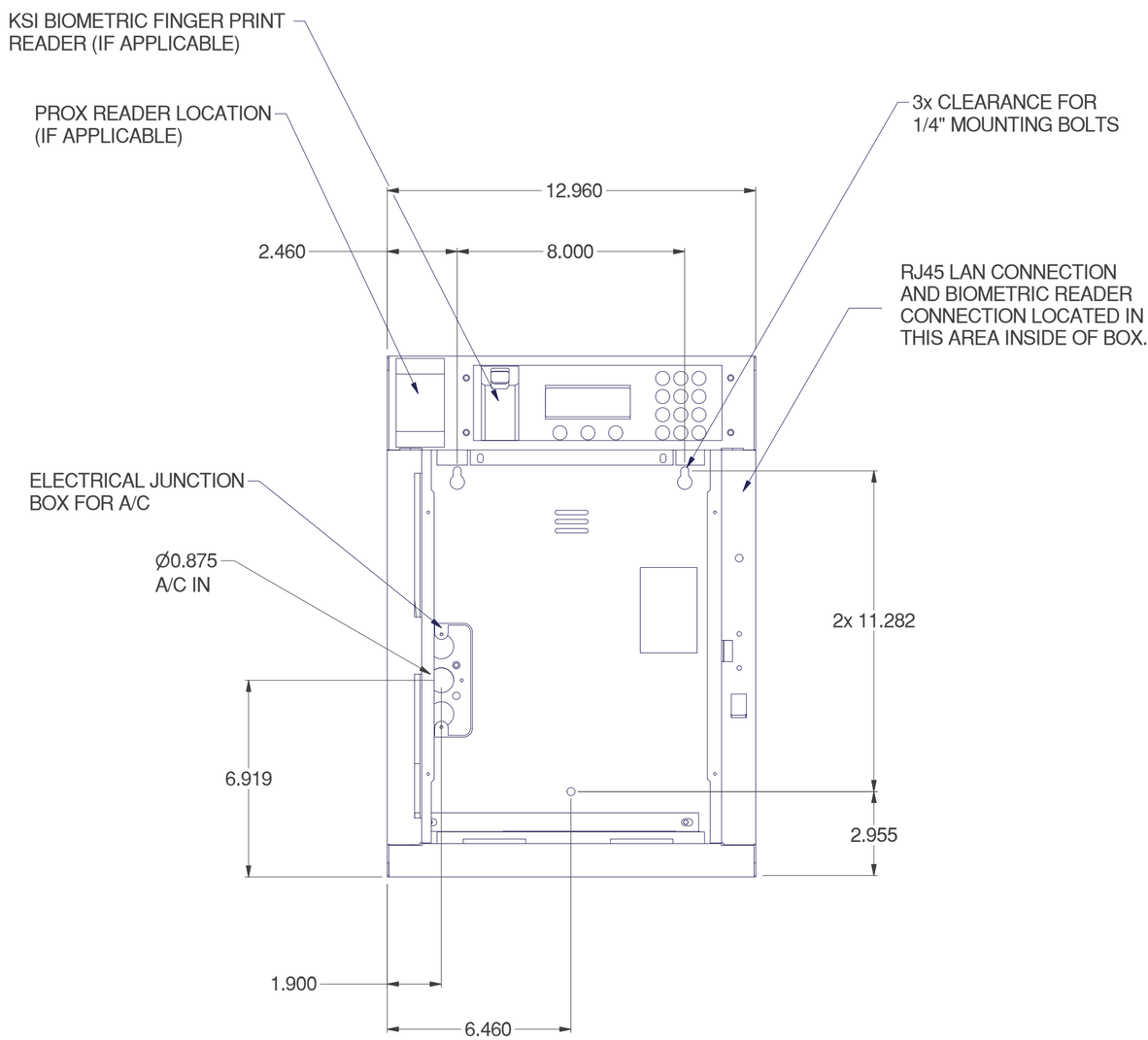

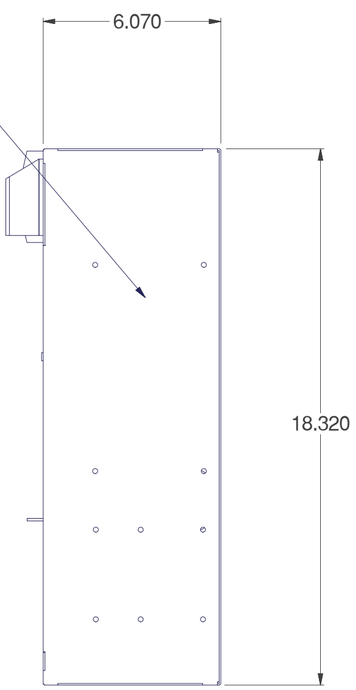

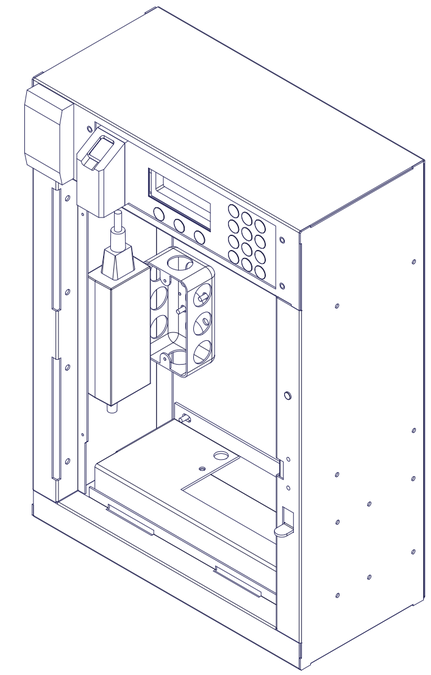

NOTES:
1) ESTIMATED WEIGHT = 30 LBS. (STANDARD UNIT)
2) NECESSARY PRECAUTIONS SHOULD BE TAKEN TO PROTECT ELECTRICAL BOARDS AND EQUIPMENT PRIOR TO ANY DRILLING.
3) ALTERNATE AREAS IN WHICH A/C CAN BE BROUGHT IN ARE AVAILABLE. CONTACT KEY SYSTEMS, INC. TECHNICAL SUPPORT FOR APPROVAL.
4) A DEDICATED CIRCUIT IS RECOMMENDED. IF YOUR POWER DOES NOT MEET STANDARDS THEN IT MAY BE NECESSARY TO CONDITION IT. POWER REQUIREMENTS: 120 vac, 2.5 AMPS, 300 WATTS, 50-60 Hz.

REV	DESCRIPTION	DATE
2	EDIT A/C INLET	2/25/2014
1	INITIAL RELEASE	6/21/2013

REVISION HISTORY

DRAWN: GEORGE MASTERS 6/21/2013
CHECKED:
MATERIAL :
FINISH :

TOLERANCE UNLESS SPECIFIED:
HOLE SIZES ± .002
DECIMAL ± .010
FORM LOCATIONS ± .015

Key Systems INC
7635 GLACIER HILL
VICTOR, NEW YORK
14564

DESCRIPTION:
8 KEY - PHYSICAL SIZE AND MOUNTING

SIZE: C
DWG NO: 8 Key Install
REV: 2
SCALE
SHEET 1 OF 1

Security Asset Managers (SAMs™)

Highest Security Asset Control

Key Systems, Inc. offers several styles of electronically controlled cabinets to store, audit and manage your keys and assets. You can personalize these devices to secure a wide variety of sensitive items. However, keys remain our customer's main focus for asset retention. The two most widely utilized methods for storing keys are through direct entrapment and/or Tamper-Proof Key Rings®. Access is assigned to one or more users based on configuration through GFMS™ Software. PIN access is standard and a host of other access options are available.

Direct Entrapment

Key Systems Inc.'s Security Asset Manager (SAM™) utilizes a variety of methods to secure your assets. To achieve the greatest level of security for high sensitivity keys, we offer direct entrapment in dedicated key positions.

Your master keys are locked in place concealing their profile and providing absolute protection from tampering.

Interchangeable Cores

To achieve direct entrapment, your interchangeable cores may be installed within our position housings. This allows for a custom placement of locks and convenient rekeying should the need arise.

Interchangeable core housing options are available for Small Format, Large Format and Mogul style keyways.

Custom Cylinder Mounting

Key Systems, Inc. provides flexible engineering options to house your locks regardless of shape or size.

KSI Keys

You may optionally select our proprietary KSI lock to serve as your position keys. The dual sided dimple design allows for KSI Keys to be inserted upside down or right side up. Retainment by most locks including small and large format IC is also available. Lock spacing is available to accommodate large assets and key rings.

Tamper-Proof Key Rings®

Achieve greater flexibility within your SAM™ allowing multiple keys to be secured using a single key position. Our key rings are serialized and made from durable stainless steel.

Tamper-Proof Key Rings® may also be used with our non-electronic products.

Expansion Cabinets/Lockers

Increase the capacity of a single controller with add-on cabinets and lockers. These additional units are monitored by the control unit and grant authorization from a single point of entry.

Secure & Accurate Identification

PIN

Hand Readers

Proximity

Card Swipe

Scale

Key Systems, Inc. now offers a self contained finger print reader that stores biometric profile data directly in our GFMS™ database. PIN and finger print verification provide dual security at the time of authorization. Users may enroll from a desktop workstation or directly at any biometrically enabled device within the GFMS™ network. Existing SAM™ customers may easily upgrade to Integrated Biometrics.

Door Options

The SAM™ comes standard with a 16-gauge powder coated steel door.

Also Available:

Lexan Doors
Provide fast and easy visual audit of assets.

Extended Doors
Accommodate large assets by increasing capacity.

Manual Override
Door and Key Panel keys provide a manual override for emergency situations.

Fail Secure Latch
Our door latch remains locked in the event of a total power failure.

Global Facilities Management System

GFMS™ combines sophisticated and adaptable, web enabled, PC-based software with no client installs. Dynamic integration and custom application are cornerstones of our philosophy towards system management.

Key Systems, Inc. will help you formulate an asset management strategy specific to your facility's requirements, regardless of size, scope and pre-existing technology.

System Requirements

- Microsoft® XP Pro / Server 2000 / Server 2003 / Server2008 / Vista / Vista Business / Vista Ultimate / Windows7
- 2 GB hard disk space for initial install
  **Database consumption will increase with time and system size*
- Network connection

Key Systems INC

Mail:
P.O. Box G
Fishers, NY 14453
Phone 800 • 888 • 3553

Ship:
7635 Glacier Hill
Victor, NY 14564
www.keystorage.com

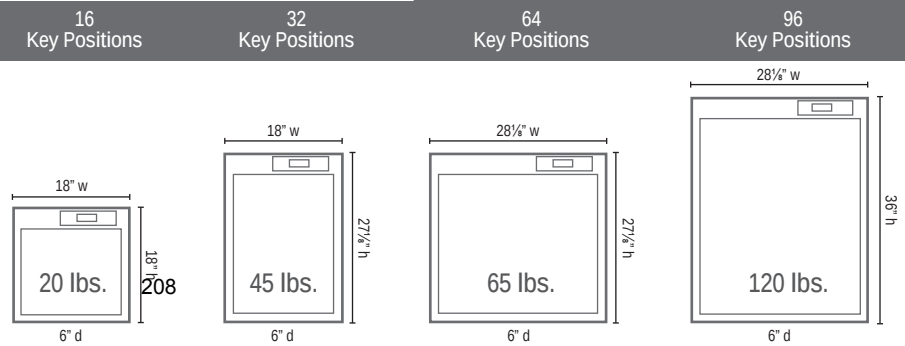

AED Plus®

ZOLL®

The Best Support
For Rescuers

CPR Required

The latest American Heart Association (AHA) Guidelines, issued in 2010, are clear: successful defibrillation requires high-quality CPR performed at the proper depth and rate. When it's time for CPR, the AED Plus® with Real CPR Help® provides the best support to help save a life.

The CPR hand-placement landmark contains a sensor that detects and measures chest compressions.

Whether a shock is advised or not, the 2010 Guidelines say that rescuers should focus on delivering high-quality CPR.[1] If no shock is advised, only high-quality CPR can potentially save a victim. That's because only good CPR can restore the heart rhythm to one required for a shock to work.

Even when an AED says "Shock Advised," high-quality CPR should begin immediately after shock delivery. Once shocked, the heart struggles for blood as it tries to reorganize and restore its natural beat. By moving blood through the heart, and back into the heart muscles itself, CPR provides critical help to the struggling heart. Without this help, a shock alone may prove ineffective, and the victim may not be resuscitated.

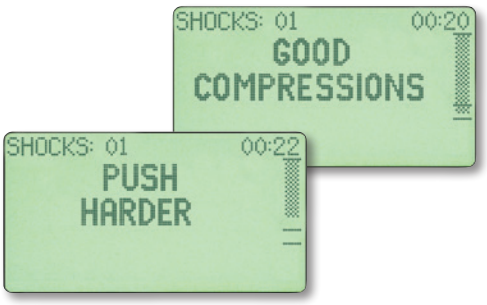

The audio prompts that the rescuer hears also appear on the screen, while the compression depth bar gauge on the right side helps the rescuer reach a depth of at least 2 inches.

Knowledge Is Power

The AHA's 2010 Guidelines recommend that rescuers push hard to a depth of at least 2 inches (or 5 centimeters) at a rate of at least 100 compressions per minute. But how do you know you're reaching that depth and rate? You shouldn't have to guess—you should know. **Only an AED that offers real-time CPR feedback provides the best support for saving a life.**

> *"Rescuers should focus on delivering high-quality CPR: providing chest compressions … of at least 2 inches."*
> *– 2010 AHA Guidelines, p. S678*

An AED that Helps You Perform High-Quality CPR

Only ZOLL's AED Plus is equipped with Real CPR Help® technology. A sensor in the pads that attach to the patient lets the AED see each chest compression and lets you know how you're doing. It guides you, with prompts and a real-time bar gauge, to the recommended depth and rate of compressions.

"Whenever defibrillation is attempted, rescuers must coordinate high-quality CPR with defibrillation." – 2010 AHA Guidelines, p. S712

How It Works

- Our one-piece CPR-D-padz®, which contains a pair of electrodes, senses and reports the motion of the chest compressions to the AED Plus.
- Audio and text prompts relay compression quality.
- The compression depth bar gauge lets you see the depth of each compression in real time.
- The adaptive metronome detects compression rate and guides you to at least 100 per minute.

"CPR can double or triple survival from witnessed cardiac arrest."
– 2010 AHA Guidelines, p. S706

Fully Automatic Model

For those who want to keep things simple, the fully automatic model of the AED Plus takes charge and delivers the shock with no rescuer interaction needed. Stay clear, and let the Fully Automatic AED Plus deliver its life-saving shock.

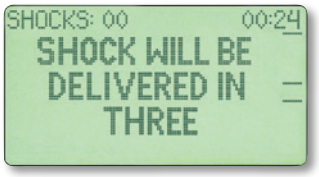

If a shock is needed, the Fully Automatic AED Plus will deliver it after a 3-second countdown, which is audible and also appears as text on the screen.

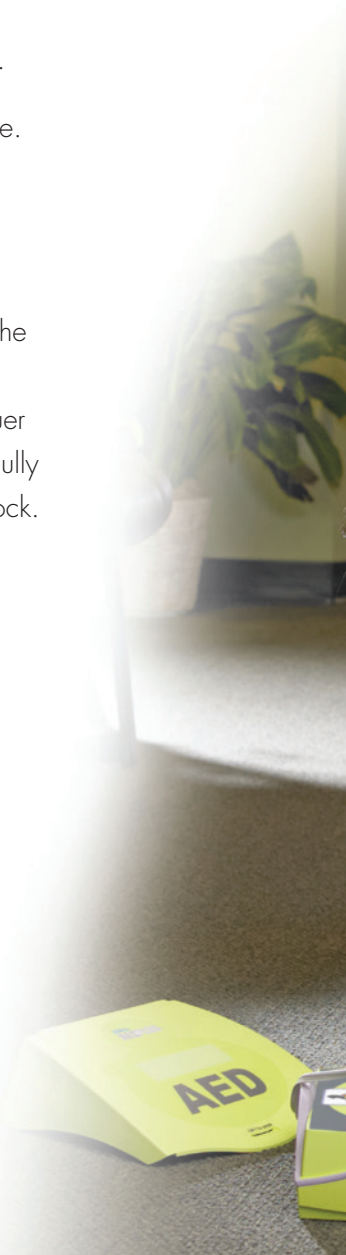

What It Means to See

Because the AED Plus can "see" your compressions, you can see, hear, and read how well you are performing CPR.

RESCUER ACTIONS	AED PLUS SUPPORT
Not yet started?	"START CPR"
Stopped?	"CONTINUE CPR"
Too slow?	Adaptive metronome speeds you up
Not deep enough?	"PUSH HARDER"
Performing good CPR?	"GOOD COMPRESSIONS"
Want to see how you're doing?	Visible bar gauge indicates depth of compressions

THE CASE FOR AEDs

Survival Increases with Early Intervention

Research shows that the probability of survival goes up dramatically when CPR is performed, and when an AED is applied before an ambulance arrives.[2]

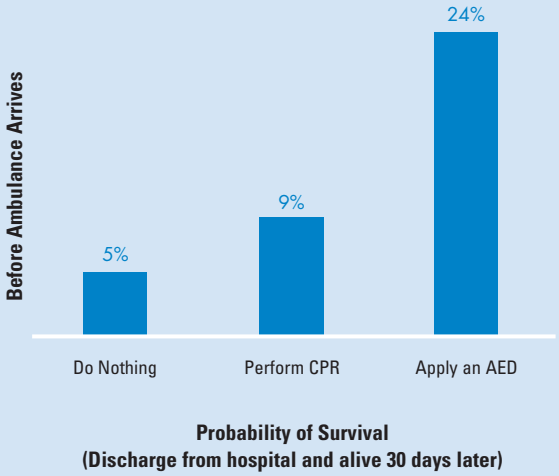

Where Is the AED?

Too often, the answer is, "We don't have one." Sadly, the same research that demonstrated a nearly fivefold increase in survivability (from 5% to 24%) when an AED is used, also showed that an AED is available only 2% of the time.

Saving More Lives

ZOLL's professional defibrillators are also equipped with Real CPR Help technology. Research conducted with EMS personnel in Arizona has shown that when professionals are trained to do high-quality CPR using ZOLL's professional defibrillators equipped with Real CPR Help—providing the same real-time feedback for depth and rate of chest compressions as the AED Plus—the chance of survival from cardiac arrest more than doubled![3] Rescuers using the AED Plus have this same best support from Real CPR Help available to them.

"Several studies have demonstrated improvement in chest compression rate [and] depth … when real-time feedback or prompt devices are used to guide CPR performance."

"… real-time CPR prompting and feedback technology such as visual and auditory prompting devices can improve the quality of CPR (Class IIa, LOE B)."– 2010 AHA Guidelines, p. S697

The Benefits of Ownership

The AED Plus can help your organization's bottom line. Once installed, the AED Plus has the lowest total cost of ownership of all AEDs on the market, especially when considering the logistics of tracking and changing pads and batteries over the life of the AED. Thanks to the long shelf life of the consumables, when you compare the cost of maintenance over 10 years, this is the most cost-effective AED to own. The AED Plus is powered by lithium batteries (available from retail outlets) that last five years, and the CPR-D-padz Electrode lasts five years as well.

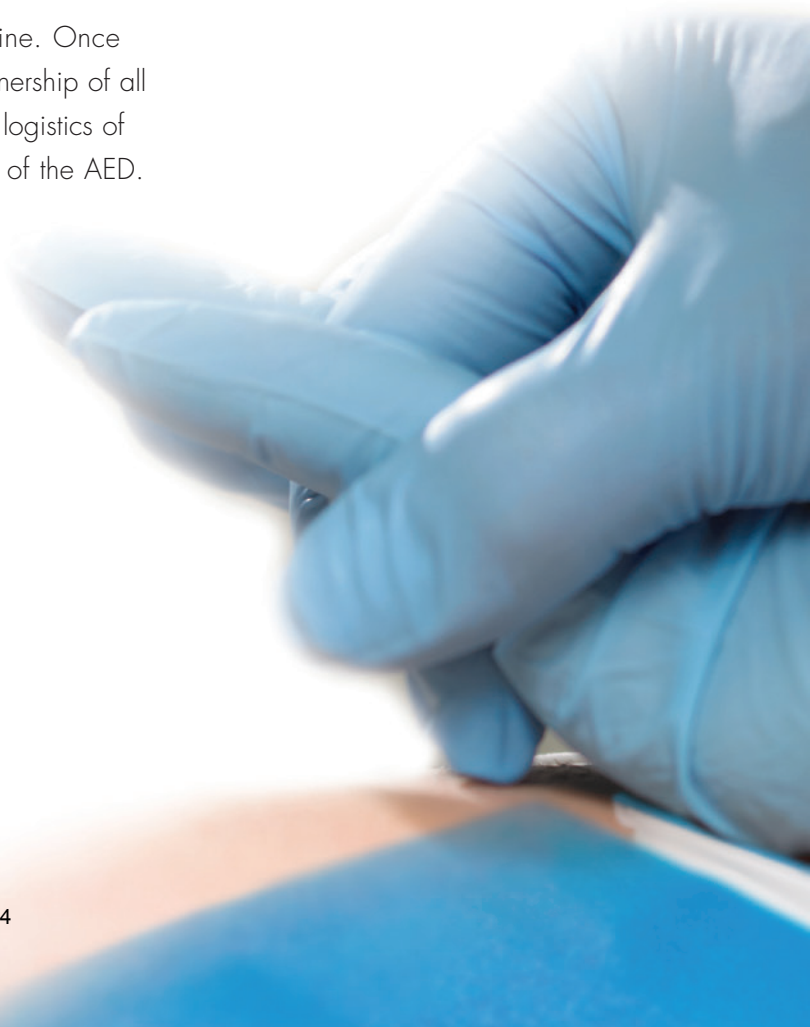

THE CASE FOR CPR

Quality Buys Time

The AHA's 2010 Guidelines note that if bystanders do nothing for a collapsed victim, the chance of survival drops about 10% every minute.

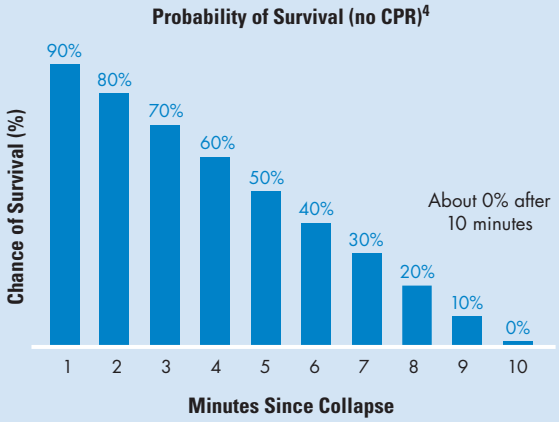

But if bystanders can immediately begin CPR and keep it up, the chance of survival only drops 3% to 4% per minute. At that rate, approximately 10 minutes after collapse, the chance of survival remains at at least 60%.

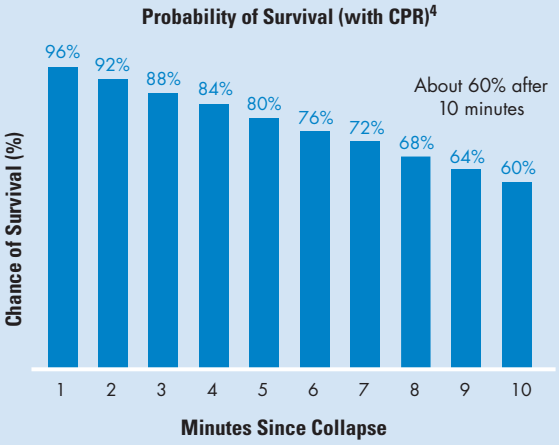

The Best Support

No other AED supports a rescuer as thoroughly as the AED Plus because it includes the following:

- Our unique one-piece CPR-D-padz for quick, easy application. Pull tabs expose the conductive gel once it is in direct contact with the skin, limiting the chance of contamination.
- A rescue accessory package attached to every CPR-D-padz that contains items critical to a successful rescue.
- A lid that acts as a "passive airway support" to maintain the victim's open airway.
- A back-lit display screen that provides simultaneous text with every audio prompt, and a circle of lighted graphical icons that show what to do.
- A display screen that presents the elapsed time and number of shocks delivered, critical information needed by EMS personnel when they arrive.
- Real CPR Help. No other AED can see the rescuers chest compressions and guide them to the required depth and rate. Other AEDs make you guess when your compressions are deep enough. Only the AED Plus lets you know.

The rescue accessory pack comes with all the additional tools you may require during a rescue, from scissors to non-latex gloves.

References:

[1]2010 American Heart Association Guidelines for Cardiopulmonary Resuscitation and Emergency Cardiovascular Care Science. *Circulation*. 2010;122:S676–S684.

[2]Weisfeldt ML, et al. *J Am Coll Cardiol*. 2010;55(16):1713–20.

[3] Bobrow BJ, et al. *Ann Emerg Med*. 2013 Jul;62(1):47–56.e1. Epub 2013 Mar 7.

[4]2010 AHA Guidelines for Cardiopulmonary Resuscitation and Emergency Cardiovascular Care Science. *Circulation*. 2010;122:S706.

ZOLL Medical Corporation, an Asahi Kasei Group company, develops and markets medical devices and software solutions that help advance emergency care and save lives, while increasing clinical and operational efficiencies. With products for defibrillation and monitoring, circulation and CPR feedback, data management, fluid resuscitation, and therapeutic temperature management, ZOLL provides a comprehensive set of technologies that help clinicians, EMS and fire professionals, and lay rescuers treat victims needing resuscitation and acute critical care. For more information, visit www.zoll.com.

The Asahi Kasei Group is a diversified group of companies led by holding company Asahi Kasei Corp., with operations in the chemicals and fibers, homes and construction materials, electronics, and health care business sectors. Its health care operations include devices and systems for acute critical care, dialysis, therapeutic apheresis, transfusion, and manufacture of biotherapeutics, as well as pharmaceuticals, diagnostic reagents, and nutritional products. With more than 29,000 employees around the world, the Asahi Kasei Group serves customers in more than 100 countries. For more information, visit www.asahi-kasei.co.jp/asahi/en/.

ADVANCING RESUSCITATION. TODAY.®

ZOLL Medical Corporation
Worldwide Headquarters
269 Mill Road
Chelmsford, MA 01824
978-421-9655
800-348-9011

For subsidiary addresses and fax numbers, as well as other global locations, please go to www.zoll.com/contacts.

Copyright © 2014 ZOLL Medical Corporation. All rights reserved. Advancing Resuscitation. Today., AED Plus, CPR-D-padz, Real CPR Help, and ZOLL are trademarks or registered trademarks of ZOLL Medical Corporation in the United States and/or other countries. All other trademarks are the property of their respective owners.

Printed in U.S.A.
MCN PP 1312 0035

ZOLL®

Modern Metal Products

DEFIBRILLATOR (AED) CABINETS

We began fabricating metal products in 1925. Then, as now, we pay meticulous attention to detail. Our workmanship is superb. This shines through in our AED Cabinets. We are a well known distributor of AED cabinets and it is no wonder why. With our close attention to detail, our sleek looking and sturdy cabinets it is an easy choice to make.

We here at Modern Metal Products want you to know that whether you are buying one cabinet at a time or one hundred and eighty, quality will never slip. However since accidents can happen and you are not completely happy with the quality, give us a call and we will be happy to work with you.

Our customers know they can count on us to get the job done right. Superior quality is still our first concern, followed by our traditionally warm, friendly customer service.

We build our products as though peoples lives depended upon them. And they do.

Call today, because with our wide variety of sizes and offerings we have an AED cabinet for everyone! 800-435-5544

147SM-1

180SM-14R

184SM-1

186SM-14

- Choice of Surface mount, Semi-recessed or Recessed models.
- MMP cabinets can be ordered to be fire rated.
- Cabinets can be ordered without alarm, or you can add a strobe with the alarm.
- All MMP alarmed AED cabinets feature the most versatile AED alarm in the industry.

All MMP AED cabinets are licensed under U.S. Patent Numbers 6,301,501 and 6,735,473, and Canadian patent number CA2406541

Surface Mount Cabinets

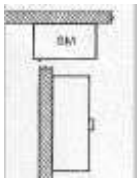

Features:

- Our most popular styles
- Rounded corners for safety
- Variety of sizes to meet your needs
- Made from corrosive resistant material.
- Designed for quick one pull to opening. No twist and pull.

Inside Cabinet Dimensions

	Height	Width	Depth
145SM	13″	13-1/2″	5-1/4″
147SM	13″	13-1/2″	7″
180SM	17-1/2″	17-1/2″	7″
184SM	30-1/2″	15-1/2″	9-1/2″

186SM	37-3/4″	15-1/2″	9-1/2″

Semi-Recessed Cabinets

	Inside Cabinet Dimensions			Wall Dimensions			Rough Wall Opening		
	Height	Width	Depth	Height	Width	Depth	Height	Width	Depth
145SR3	11″	11-1/2″	5-1/4″	13″	13-1/2″	2-1/2″	12″	12-1/2″	2-3/4″
147SR3	11″	11-1/2″	7″	13″	13-1/2″	3-1/8″	12″	12-1/2″	4″
180SR3	14″	14″	7″	17-1/2″	17-1/2″	3-1/8″	15″	15″	4″
184SR3	27″	12″	6″	30-1/2″	15-1/2″	2-1/2″	28″	13″	4″

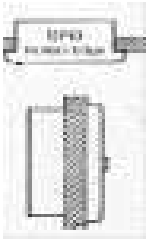

Recessed Cabinets

	Inside Cabinet Dimensions			Wall Dimensions			Rough Wall Opening		
	Height	Width	Depth	Height	Width	Depth	Height	Width	Depth
145R1	11″	11-1/2″	5-1/4″	13″	13-1/2″	15/16″	12″	12-1/2″	4-1/2″
147R1	11″	11-1/2″	7″	13″	13-1/2″	15/16″	12″	12-1/2″	6-1/4″
180R1	14″	14″	7″	17-1/2″	17-1/2″	15/16″	15″	15″	6-1/4″
184R1	27″	12″	6″	30-1/2″	15-1/2″	5/16″	28″	13″	6-1/4″

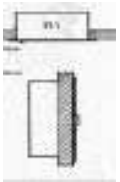

Features

- Recessed and semi recessed cabinets are ADA compliant.
- Semi-recessed cabinets are designed to fit in standard 2×4 wall construction.
- Variety of sizes to meet your need
- Made from corrosive resistant material.
- Designed for quick one pull to open. No twist and pull.

Fire Rated Semi-Recessed Cabinets

	Inside Cabinet Dimensions			Wall Dimensions			Rough Wall Opening		
	Height	Width	Depth	Height	Width	Depth	Height	Width	Depth
FSB147SR3	11″	11-1/2″	6-1/4″	13″	13-1/2″	3-1/8″	12-3/4″	13-1/4″	4-7/8″
FSB180SR3	14″	14″	6-1/4″	17-1/2″	17-1/2″	3-1/8″	15-3/4″	15-3/4″	4-7/8″

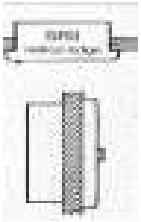

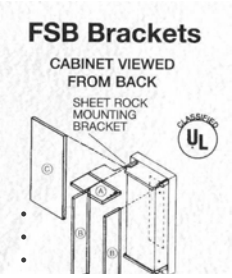

This well designed cabinet required only one tank, and the unique bracket design secures the fire rated sheet rock around the tank. It meets UL-147 and is classified by Underwriters Laboratories Inc., and is for use in penetration fire stop systems. Modern metal Products is the first to have this fire rating with this design. The cabinet must be installed to our instruction or the rating will be void. Refer to UL Fire Resistance directory 1996 edition – WL7005. Patent pending.

Features

Maintains the integrity of 1 and 2 hour fire rated walls with simple designed UL classified cabinet.
Special designed FSB brackets with slots hold your fire rated type X sheet rock firmly in place.
Made from rust resistant material.

- Recessed and semi recessed cabinets are ADA compliant.
- No double tank system – keeps the freight cost down and still provides the 2 hour fire rating

AED Cabinet Alarm Systems

- The MMP alarm has a very high decibel level (85-120). The decibel level will vary with the life of the battery. To insure safe operations, we recommend changing the alkaline 9V battery every six months.
- Alarm has a low battery chirp to warn when battery is low. When chirp is heard change the battery as soon as possible.
- Alarm has the option to be activated in four different settings.

    1. Alarm activated when door is opened, shuts off when door is closed.
    2. Alarm activated when door is opened, shut off with key only.
    3. Activates for 30 seconds, when door is opened.
    4. Activates for 3 minutes, when door is opened.

- External alarm relay connection on outside of alarm case for easy connection to an external building security system is a standard “no extra cost” feature in every MMP alarm.
- The connections are simple “plug & play” no tools required.
- Very reliable mechanical door switch used to activate the unit when the door is opened. Switch is secured in the cabinet without the use of adhesives.

Alarm plastic housing is secured within the AED cabinet with two push on hex nuts. This allows the alarm to be secured to the cabinet and easily removable to change batteries or adjust settings.

AED Cabinet strobe

- Provides a visual indication alarm has been activated.
- Standard color is red.
- Strobe is a component that can be added to the alarm. Strobe activates and deactivates from the alarm.

AED Signs

150 V- SHAPED SIGN

- Easily seen from all directions
- 8″ x 10″ AED SIGN ON BOTH SIDES
- Silk screen lettering on powder paint.

151 FLAT SIGN

- Great for hanging above your AED
- 8″ x 10″ AED SIGN
- Silk screen lettering on powder paint.

AED Cabinet Accessories

AED Pedistal

- Makes moving AED location easy.
- Made from heavy duty steal.
- Durable black powder coat finish.
- Measures 33″ from cabinet base to floor.
- Works with 147SM and 180SM models only.

250129 Riser

- Rises AED
- Great for centering AED in cabinet
- Creates storage in cabinet

AED Keys

- For replacement or just to have extra set on hand
- Please have key number when ordering.

ISO 9001:2008 REGISTERED

MODERN METAL PRODUCTS
(Division of Technico Inc.)
P.O. Box 247
Owatonna, MN 55060
800–435–5544
Fax: 507–451–0882
info@modern–metal.com

Typical Coffee Maker and Ice/Water Machine hook ups

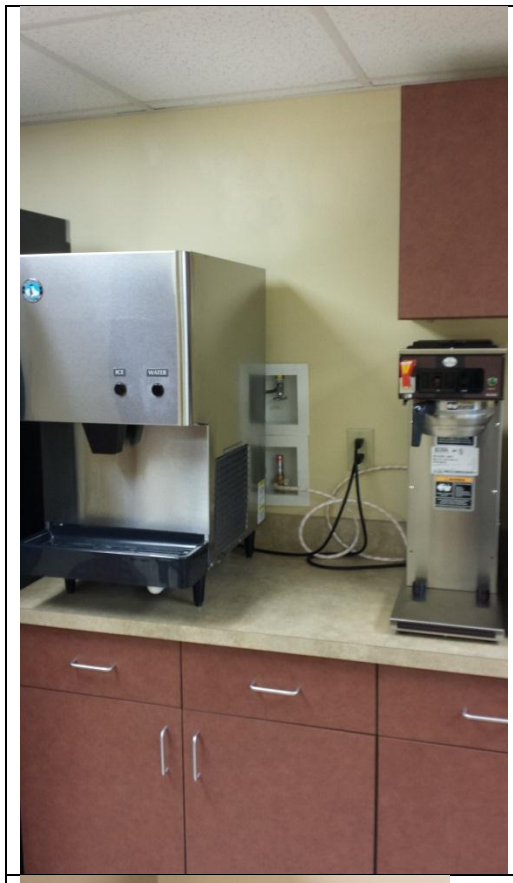	Typical coffee maker and ice /water machine hook up. Dual water cut off valves
	Closer look at the water cut off valves

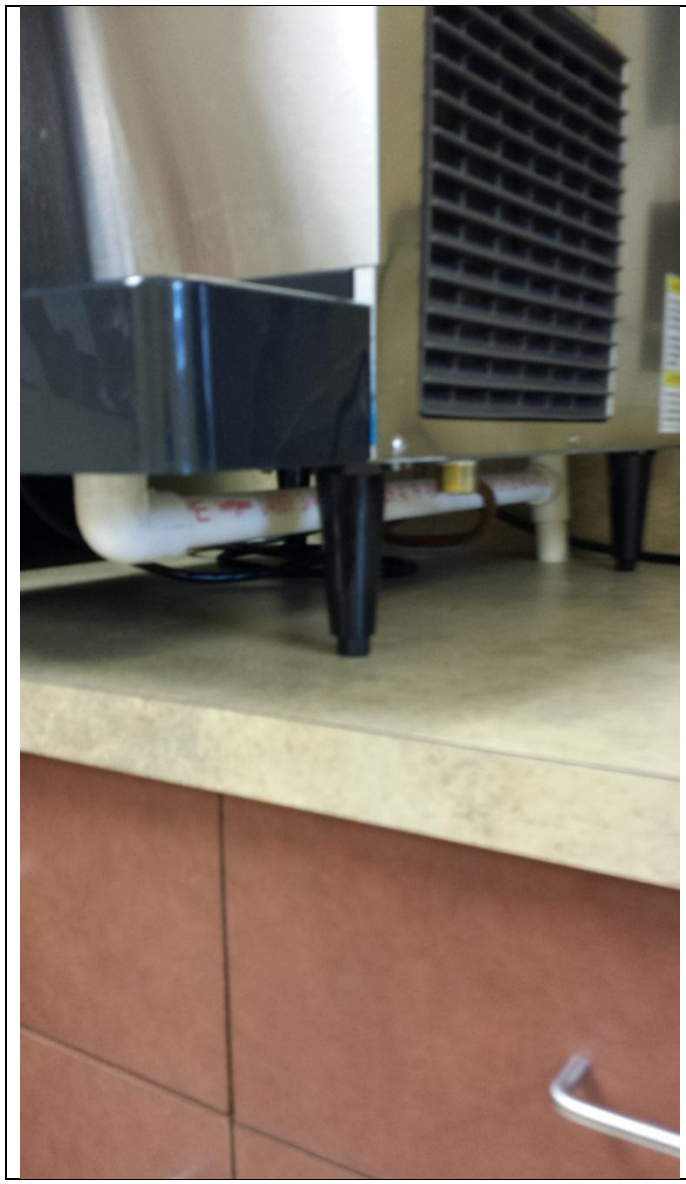	Typical drain line below ice maker

	Typical ice maker drain line connection to sink drain.

CT4000 Family

ChargePoint® Charging Stations

The CT4000 is the latest generation of ChargePoint charging stations. Refined yet rugged, the CT4000 family sets the industry standard for functionality and aesthetics. A robust cord retraction system comes standard on all CT4000 models to eliminate unsightly cords on the ground, and to keep your drivers from having to touch charging cables.

The CT4000 full motion color LCD display instructs drivers while supporting dynamic updates of custom branded videos and advertisements.

The intelligent power sharing feature of the CT4000 doubles the number of parking spaces served by allowing two charging ports to share a single circuit. Sites with single port EV stations can upgrade to dual port stations without requiring additional electrical services.

All CT4000 models offer one or two standard SAE J1772™ Level 2 charging ports with locking holsters, each port supplying up to 7.2kW.

Available in bollard and wall mount configurations, the CT4000 supports easy installation anywhere. To future proof your investment, all stations are fully software upgradeable over the air. All ChargePoint stations are networked and managed through ChargePoint Service Plans[1] and backed by ChargePoint's world class 24/7 driver phone support.

Corporate Branding and Video Advertising

- Download full motion color videos to your stations[2]
- Custom replaceable signage to project your brand
- Custom "cap" printing available[3]

Clean Cord Technology™

- Maintenance-free, light-weight, self-retracting cords come standard on all models
- Keep charging cords off the ground and out of your and drivers' hands
- Flexible over entire -22°F to +122°F product temperature range

Intelligent Power Sharing (patent pending)

- Reduced installation and operating costs
- Dynamically share one 40A circuit between two parking spaces
- Double the number of parking spaces for a given site's power capacity
- Upgrade a single port station to dual port with no electrical upgrade

Driver Friendly User interface

- Instructional video shows how to use the station
- Multi-language: English, French, Spanish
- Touch button interface; works in rain, ice and with gloves
- Backed by ChargePoint's world class 24/7 driver phone support

Energy Measurement and Management

- Real-time energy measurement
- 15 minute interval recording
- Time of Day (TOD) pricing
- Load shed by % of running average or to fixed power output

The standard *EV Charging Only* sign is easily replaceable with your branding.

The cap of the CT4000 family is also available for custom branding.

The 5.7" LCD display provides full motion charging instructions in a clear and simple format. It also allows station owners to deliver advertising messaging.

Driver interaction is supported in any weather by five rugged, back-lit buttons with audio feedback.

[1] ChargePoint Service Plans are sold separately
[2] Download fees apply
[3] Minimum order quantities apply

CT4021 Bollard

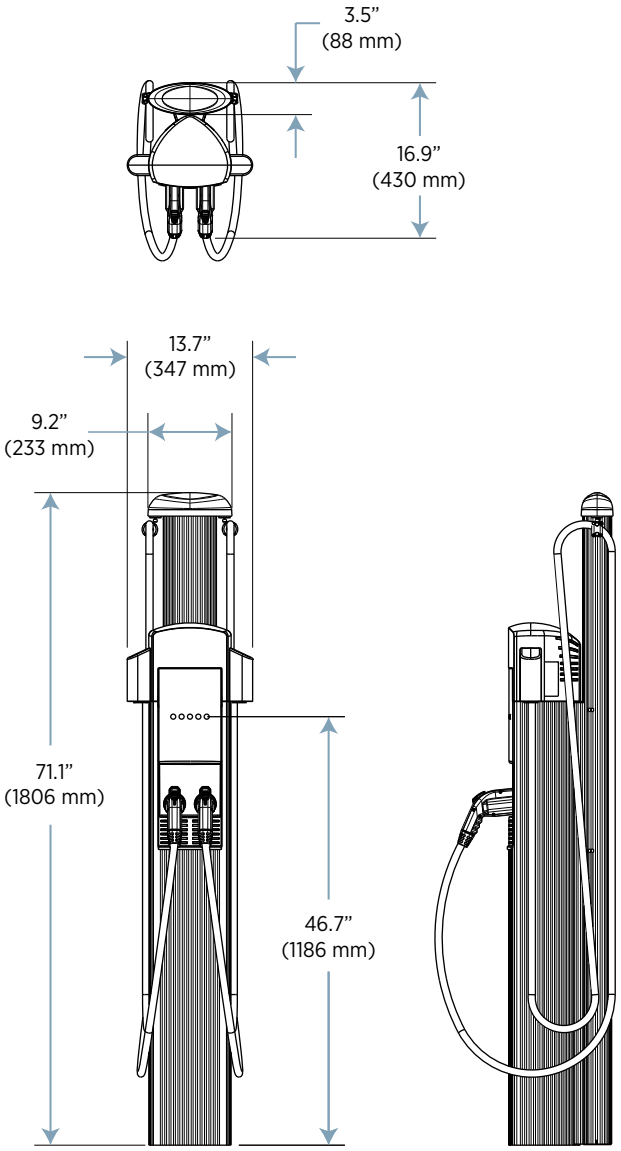

CT4023 Wall Mount

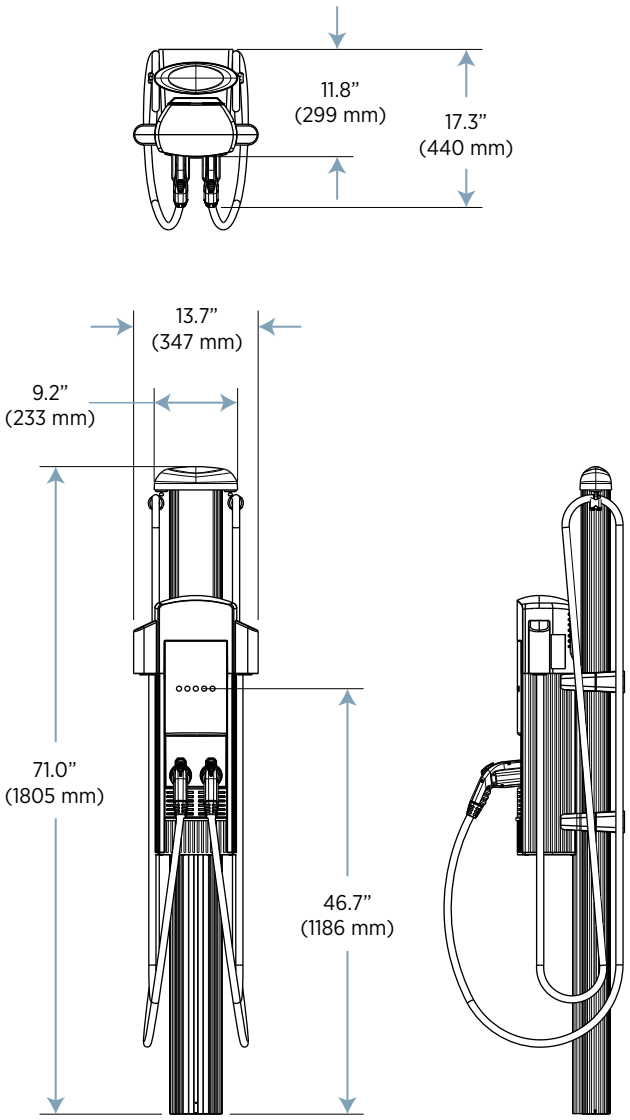

CT4000 Family Specifications

Electrical Input	Single Port	Dual Port
AC Power Input Rating – Standard	208/240VAC 60Hz single phase @ 30A	208/240VAC 60Hz single phase @ 30 x 2
AC Power Input Rating – Power Sharing	n/a	208/240 VAC 60Hz single phase @ 32A
Input Power Connections – Standard	One 40A branch circuit	Two independent 40A branch circuits
Input Power Connections – Power Sharing	n/a	One 40A branch circuit
Required Service Panel Breaker – Standard	40A dual pole (non-GFCI type)	40A dual pole (non-GFCI type) x 2
Required Service Panel Breaker – Power Sharing	n/a	40A dual pole (non-GFCI type)
Service Panel GFCI	Do not provide external GFCI as it may conflict with internal GFCI (CCID)	
Wiring – Standard	3-wire (L1, L2, Earth)	5-wire (L1, L1, L2, L2, Earth)
Wiring – Power Sharing	n/a	3-wire (L1, L2, Earth)
Station Power	8W typical (standby), 15W maximum (operation)	

Electrical Output

AC - Standard	7.2kW (240VAC @ 30A)	7.2kW (240VAC @ 30A) x 2
AC - Power Sharing	n/a	7.2kW (240VAC @ 30A) x 1 OR 3.8kW (240VAC @ 16A) x 2

Functional Interfaces

Connector(s) Type	SAE J1772™	SAE J1772™ x 2
Charging Cable Length	18' (5.5 meters)	18' (5.5 meters) x 2
Overhead Cable Management System	Yes	
LCD Display	5.7" full color, 640x480, 30fps full motion video, active matrix, UV protected	
Card Reader	ISO 15693, 14443, NFC	
Locking Holster	Yes	Yes x 2

Safety and Connectivity Features

Ground Fault Detection	20mA CCID with auto retry
Open Safety Ground Detection	Continuously monitors presence of safety (green wire) ground connection
Plug-Out Detection	Power terminated per SAE J1772™ specifications
Power Measurement Accuracy	+/- 2% from 2% to full scale (32A)
Power Report/Store Interval	15 minute, aligned to hour
Local Area Network	2.4 GHz Wi-Fi (802.11 b/g/n)
Wide Area Network	3G GSM, 3G CDMA

Safety and Operational Ratings

Enclosure Rating	Type 3R per UL 50E
Safety Compliance	UL listed for USA and cUL certified for Canada; complies with UL 2594, UL 2231-1, UL 2231-2, and NEC Article 625
Surge Protection	6kV @ 3000A. In geographic areas subject to frequent thunder storms, supplemental surge protection at the service panel is recommended.
EMC Compliance	FCC Part 15 Class A
Operating Temperature	-22°F to 122°F (-30°C to +50°C)
Operating Humidity	up to 85% @ +50°C (122°F) non-condensing
Non-Operating Humidity	up to 95% @ +50°C (122°F) non-condensing
Terminal Block Temperature Rating	221°F (105°C)
Maximum Charging Stations per 802.11 Radio Group	10. Each station must be located within 150 feet "line of sight" of a gateway station.

ChargePoint, Inc. reserves the right to alter product offerings and specifications at any time without notice, and is not responsible for typographical or graphical errors that may appear in this document.

CT4021 Bollard charging station

CT4023 Wall Mount charging station

Ordering Information

Specify model number followed by the applicable code(s).

Option		Order Code
Model	Single Port Bollard Mount Dual Port Bollard Mount	CT4011 CT4021
	Single Port Wall Mount Dual Port Wall Mount	CT4013 CT4023
Options	Integral Gateway Modem - USA Integral Gateway Modem - Canada	-GW1 -GW2
Warranty	Single Port Extended Hardware-Only Warranty – 2, 3, 4 or 5 year term	CT4010-EXWn*
	Dual Port Extended Hardware-Only Warranty – 2, 3, 4 or 5 year term	CT4020-EXWn*

* Where *n* is the total number of years in the term

Order Code Examples

If ordering this	the order code is
Dual Port Bollard Mount USA Gateway Station	CT4021-GW1
Single Port Wall Mount Station with 5 Year Warranty	CT4013 CT4010-EXW5
Dual Port Wall Mount Canada Gateway Station with 2 Year Warranty	CT4023-GW2 CT4020-EXW2

For More Information

Visit **chargepoint.com**
Follow us on Twitter @**chargepointnet**
Like us on Facebook @**chargepoint**

ChargePoint, Inc.
1692 Dell Avenue | Campbell, CA | 95008-6901 USA
+1.408.370.3802 or toll free 877.370.3802
chargepoint.com

Copyright © 2013 ChargePoint, Inc. All rights reserved. CHARGEPOINT is a U.S. registered trademark/service mark, and an EU registered logo mark of ChargePoint, Inc. All other products or services mentioned are the trademarks, service marks, registered trademarks or registered service marks of their respective owners. PN 73-001020-01 Rev 4

Printed on paper made with 100% post-consumer fiber and 100% certified renewable energy, and processed chlorine free.

100% Recycled Fiber PCF

Listed by Underwriters Laboratories Inc.

ELKAY®

SPECIFICATIONS

Bi-Level Outdoor Tubular Bottle Filling Station with Pet Fountain Model LK4420BFDB

GENERAL

Pedestal steel bottle filler with textured power coat finish and E-Coat immersion for year-round beauty with minimum maintenance. The E-Coat immersion process coats the outside and inside of the unit for the ultimate in corrosion protection.

Includes pet fountain with slow drainage feature.

Configuration options:
- Single bottle filler in upper location with drinking fountain basin at lower position (Model LK4420BF1UDB)
- Single bottle filler in lower location with drinking fountain basin at upper position (Model LK4420BF1LDB)
- Dual bottle fillers (Model LK4420BF2DB)

NO LEAD DESIGN

This fountain is certified by WQA to lead-free compliance including **NSF/ANSI 61-ANNEX G, AB 1953**.
This model complies with the lead-free definition in the Safe Drinking Water Act of 1986 and Lead Contamination Act of 1988.

CONSTRUCTION

Bottle Filler: Heavy-duty steel construction with rounded design. Laminar flow minimizes splash and allows easy maintenance. Quick fill rate at 1 gallon per minute.

Pushbutton Actuation Mechanism: Self-closing, vandal-resistant pushbutton does not require grasping or twisting.

Inlet Strainer: Easily cleaned in-line strainer screen traps particles of 140 microns or larger before they enter the waterway.

Access Panel: Manufactured of heavy-gauge steel with vandal-resistant screws. Provides access for easy hook-up of all plumbing connections.

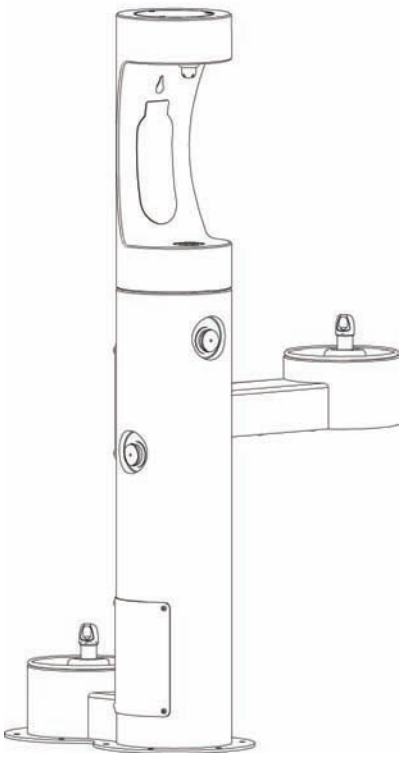

Model LK4420BF1UDB Shown

AVAILABLE OPTIONS

Freeze-resistant option - add “FRK” suffix to model number.
Note - Pet Fountain will not be freeze-resistant
(See separate specification sheet.)

This model is ADA compliant when properly installed.

Designed to be easily accessible to both physically challenged and able-bodied individuals. Ideally suited for installation in public areas. Model meets state and federal requirements as defined by the Americans with Disabilities Act.

SUGGESTED SPECIFICATIONS

Unit shall be of tubular steel construction. Bottle Filler unit shall include laminar flow and front pushbutton activation. Shall include pet fountain with slow drain feature. Stainless steel contoured basin with vandal-resistant one-piece bubbler, if applicable. Shall comply with ADA guidelines and be certified to lead-free compliance including NSF/ANSI 61, CA 1953 and the Safe Drinking Water Act.

Shipping Weight: 205-255 lbs.

In keeping with our policy of continuing product improvement, Elkay reserves the right to change product specifications without notice.

This specification describes an Elkay product with design, quality and functional benefits to the user. When making a comparison of other producers' offerings, be certain these features are not overlooked.

Elkay
elkayusa.com

2222 Camden Court
Oak Brook, IL 60523

Printed in U.S.A.
©2011 Elkay

(9/11) 19-29

ELKAY®

ROUGH-IN DIMENSIONS

MOUNTING INSTRUCTIONS and PLUMBING CONNECTIONS

Mount on a smooth, flat, finished surface with adequate support (300 lb. load maximum. Secure unit with ten 3/8" minimum screws or anchor bolts (not provided). Refer to rough-in.

Water supply 3/8" O.D. unplated copper tube. Waste 1-1/2" IPS.

Modified low stream height bubbler for pet fountain.

Trap and service stop not included.

Operating Pressures: Supply water: 20 - 105 psi maximum.

TOP VIEW

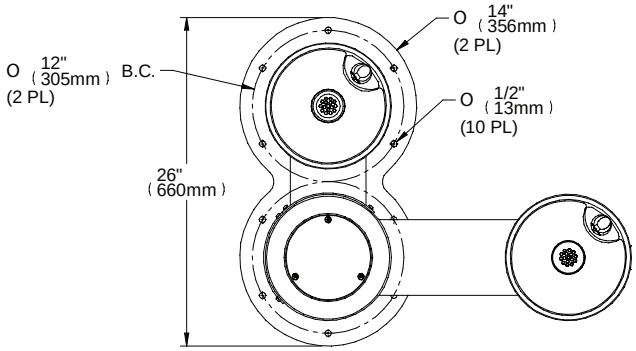

FRONT VIEW

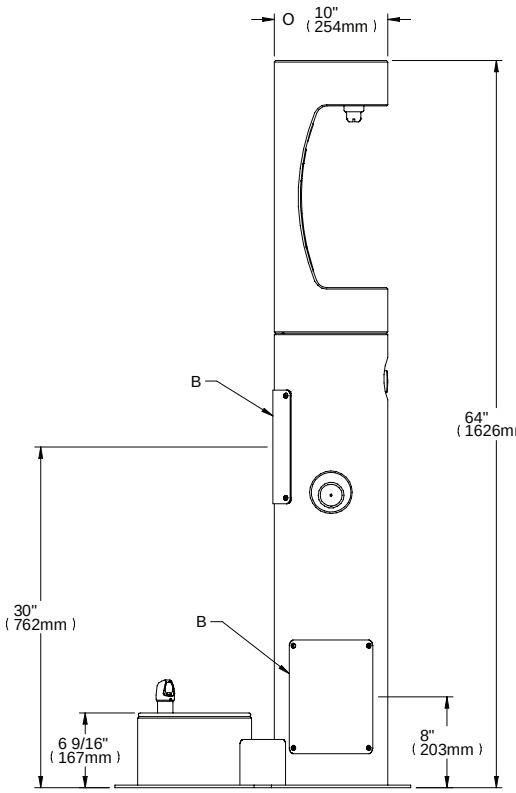

SIDE VIEW

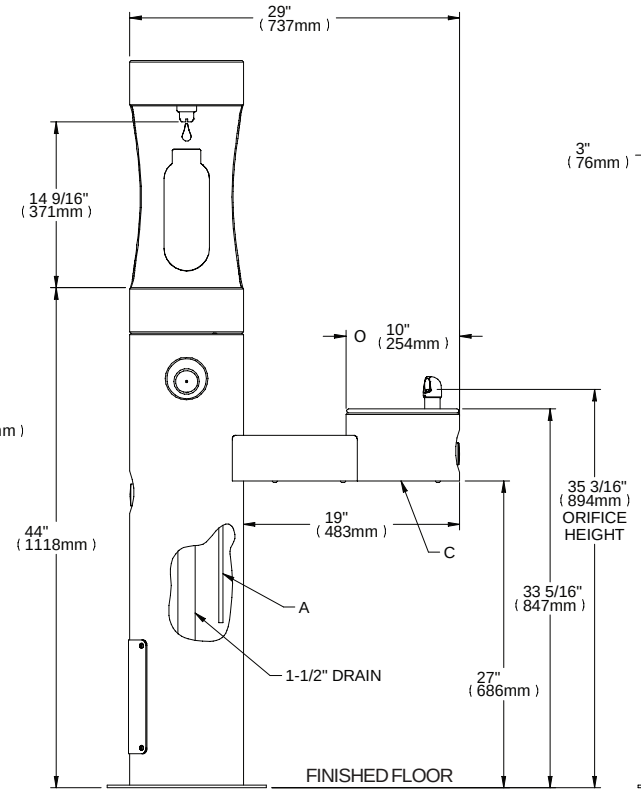

BACK VIEW

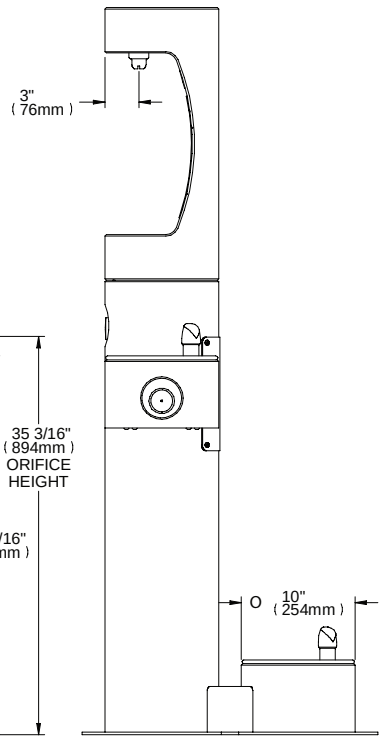

LEGEND
A = 3/8" O.D. UNPLATED COPPER TUBE CONNECT - SHUT OFF VALVE BY OTHERS
B = ACCESS PANEL (8" X 10")
C = REMOVABLE BOTTOM COVER

2222 Camden Court
Oak Brook, IL 60523
elkayusa.com

Printed in U.S.A.
©2011 Elkay

ELKAY®

ROUGH-IN DIMENSIONS

MOUNTING INSTRUCTIONS and PLUMBING CONNECTIONS

Mount on a smooth, flat, finished surface with adequate support (300 lb. load maximum. Secure unit with ten 3/8" minimum screws or anchor bolts (not provided). Refer to rough-in.

Water supply 3/8" O.D. unplated copper tube. Waste 1-1/2" IPS.

Modified low stream height bubbler for pet fountain.

Trap and service stop not included.

Operating Pressures: Supply water: 20 - 105 psi maximum.

TOP VIEW

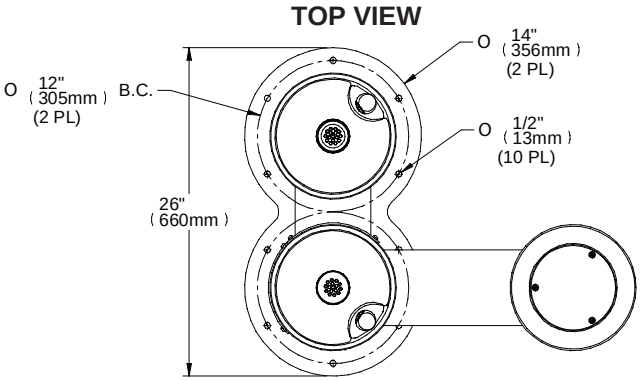

FRONT VIEW **SIDE VIEW** **BACK VIEW**

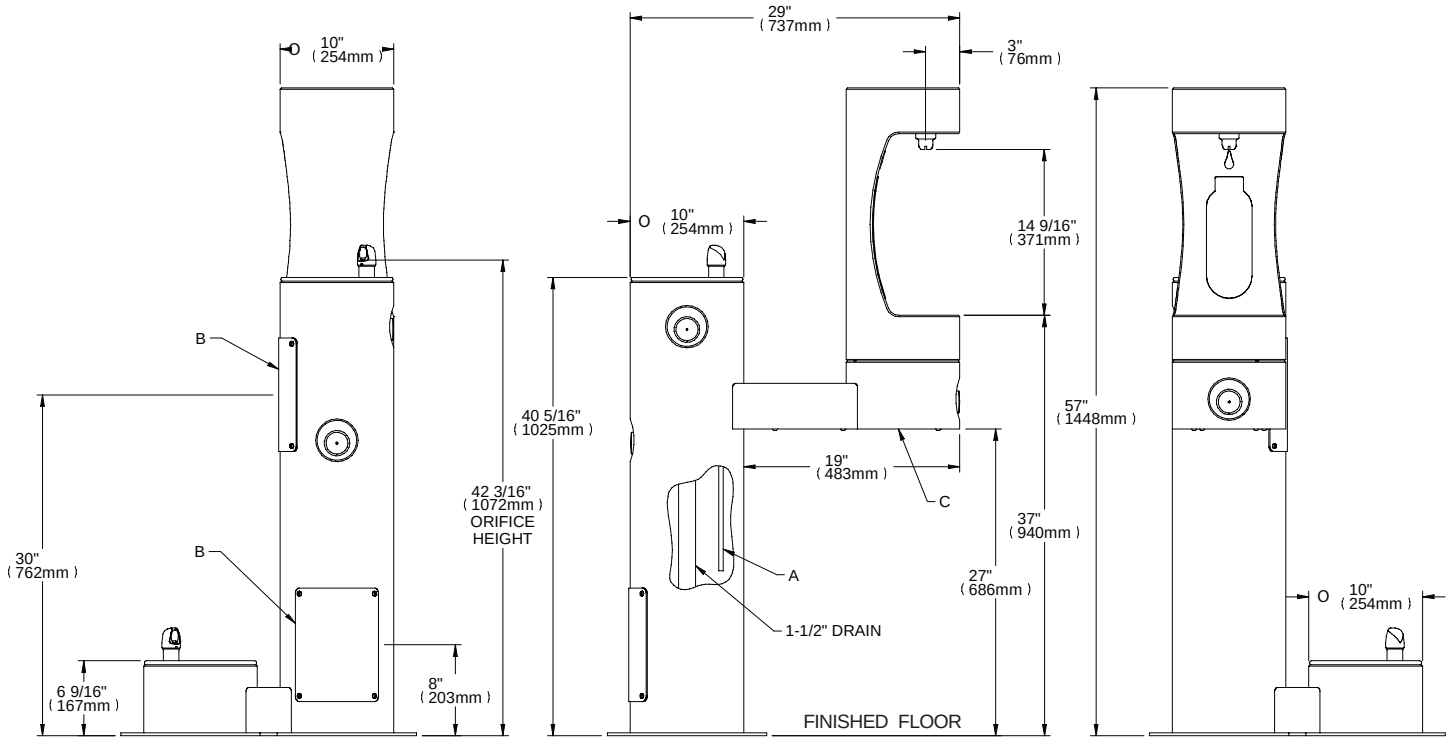

LEGEND
A = 3/8" O.D. UNPLATED COPPER TUBE CONNECT - SHUT OFF VALVE BY OTHERS
B = ACCESS PANEL (8" X 10")
C = REMOVABLE BOTTOM COVER

2222 Camden Court
Oak Brook, IL 60523
elkayusa.com

Printed in U.S.A.
©2011 Elkay

ELKAY®

ROUGH-IN DIMENSIONS

MOUNTING INSTRUCTIONS and PLUMBING CONNECTIONS

Mount on a smooth, flat, finished surface with adequate support (300 lb. load maximum. Secure unit with ten 3/8" minimum screws or anchor bolts (not provided). Refer to rough-in.

Water supply 3/8" O.D. unplated copper tube. Waste 1-1/2" IPS.

Modified low stream height bubbler for pet fountain.

Trap and service stop not included.

Operating Pressures: Supply water: 20 - 105 psi maximum.

TOP VIEW

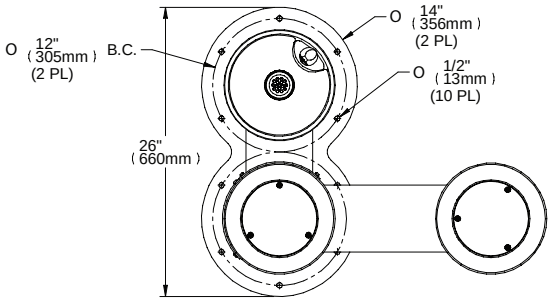

FRONT VIEW

BACK VIEW

SIDE VIEW

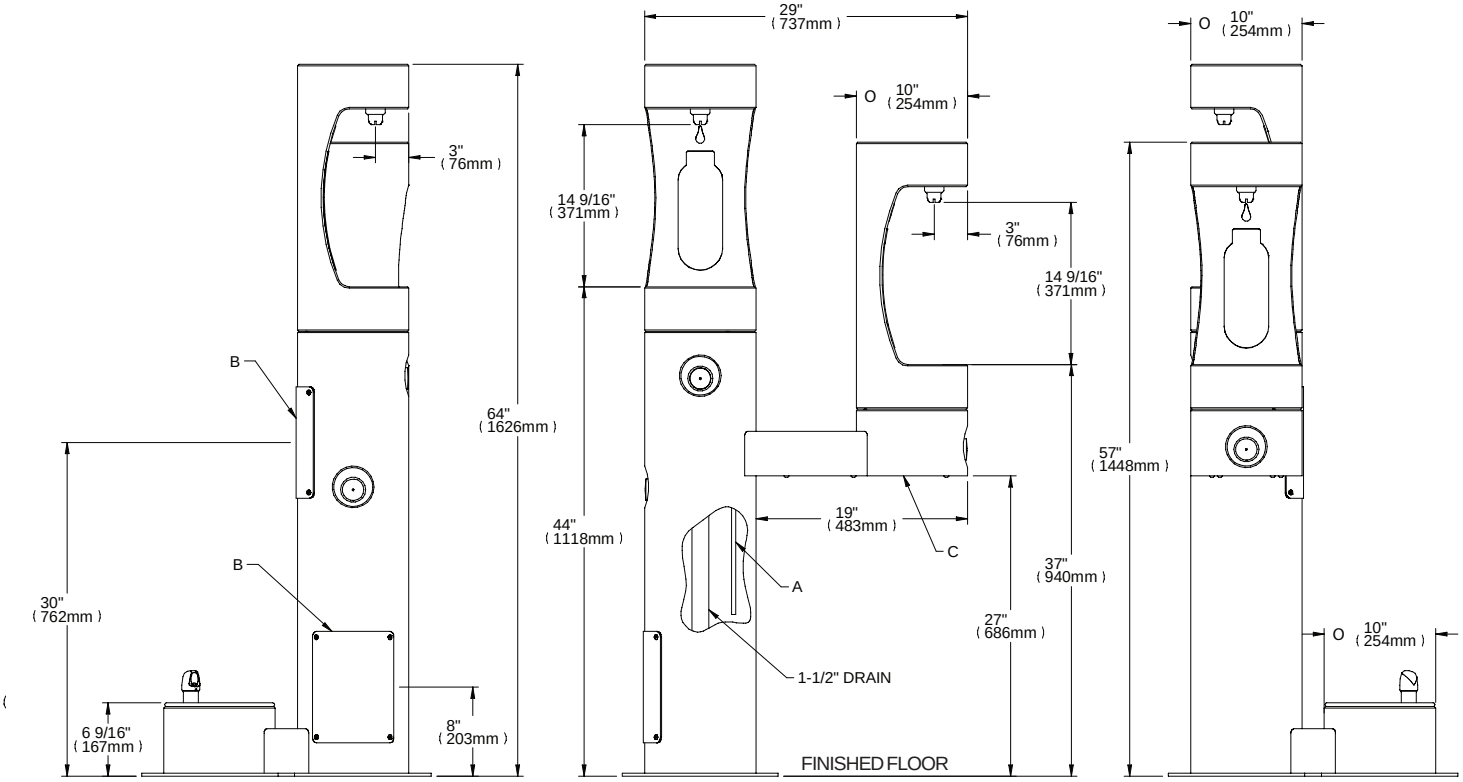

LEGEND
A = 3/8" O.D. UNPLATED COPPER TUBE CONNECT - SHUT OFF VALVE BY OTHERS
B = ACCESS PANEL (8" X 10")
C = REMOVABLE BOTTOM COVER

2222 Camden Court
Oak Brook, IL 60523
elkayusa.com

Printed in U.S.A.
©2011 Elkay

Print Page

AL752BBISSHV

SUMMIT's AL750BI series features built-in capable all-refrigerators designed to fit under lower ADA compliant counters.

The AL752BBISSHV is conveniently sized at 32 inches high and under 24 inches wide to fit into tight spaces. It can be built into cabinetry or used freestanding, with a fully finished jet black cabinet. The stainless steel door adds easy-to-clean convenience, with a sleek stainless steel handle completing the elegant look.

Inside, the AL752BBISSHV uses automatic defrost to lower user maintenance. SUMMIT's unique "hidden" evaporator is set behind the rear wall to create a seamless interior. The generous storage capacity and flat door liner can accommodate large trays with dimensions of 19 1/2" x 16." A rocker switch to turn the interior light on and off is located just behind the adjustable thermostat for additional convenience.

User-friendly and energy efficient, the AL752BBISSHV fits well in any setting. Match it with a frost-free SCFF55BSSHVADA freezer for a complete side-by-side set.

Highlights

- 32 inch height fits under lower ADA compliant counters
- Flexible design allows built-in or freestanding use
- Stainless steel door complete with sleek handle for modern elegance
- Black cabinet with adjustable glass shelves inside
- Save time and energy with low maintenance automatic defrost
- Perfectly sized to fit under counters and in tight 24 inch spaces

Features

ADA compliant	32 inch height fits under standard ADA counters
Slim undercounter dimensions	Less than 24 inches wide with a full 5.5 c.f. capacity
Built-in capable	Make the best use of space by installing your appliance under the counter and flush with other cabinets
Fully finished black cabinet	Allows the unit to be used freestanding
Stainless steel door	Durable design with lasting elegance
Professional stainless steel handle	Thin 14mm diameter on vertical stainless steel handle
Automatic defrost	Simplify appliance care by letting the refrigerator defrost itself
One piece interior liner	Easy clean-up with a seamless liner that won't hold a mess in hidden crevices
Hidden evaporator	SUMMIT's original "hidden" evaporator is concealed in the wall so it never touches your fingers
Adjustable glass shelves	Rearrange the refrigerator space to accommodate all shapes and sizes or remove shelves for a simple clean-up
Flat door liner	An easy-to-clean flat liner accepts large trays
Deep shelf space	Interior accommodates large trays up to 19 1/2" x 15 1/2"
Interior light on rocker switch	Turn the light on when you need it and off when you're done with a convenient rocker switch

Adjustable thermostat	Manage the interior temperature with ease and accuracy
Matchable to other SUMMIT units	Pair with SUMMIT SCFF55BSSHV for a complete undercounter set
100% CFC free	Environmentally friendly design without ozone-damaging chemicals

Specifications

Height:	32.0"
Width:	23.63"
Depth:	23.5"
Capacity:	5.5 cu.ft.
Ext Depth with Handle:	24.75"
Interior Height 1:	26.25"
Interior Width 1:	21.0"
Interior Depth 1:	17.75"
Comp Step Height:	5.5"
Comp Step Width:	21.0"
Comp Step Depth:	5.5"
Shipping Weight:	115.0 lbs.
Weight:	100.0 lbs.
Amps:	1.3
US Electrical Safety:	UL
Voltage/Frequency:	115 V AC/60 Hz
Canadian Electrical Safety:	ULC
Energy Usage/Year:	405.0 kWh/year
Reversible:	Factory Reversible
Door Swing:	RHD
Shelf Quantity:	3
Adjustable Shelf:	Yes
Shelf Type:	Glass
Defrost Type:	Automatic
Depth with door at 90°:	45.5"
Height to Hinge Cap:	32.25"
Thermostat Type:	Dial
Light:	Yes
High Side PSI:	285.0
Refrigerant Type:	R134a
Low Side PSI:	88.0
Level Legs Quantity:	4
Freon Oz:	1.8
Parts/Labor Warranty:	1 Year
Compressor Warranty:	5 Years

Options

Cabinet

Standard:

Black:	Black

Also Available in:

CSS:	Complete 304 grade stainless steel wrapping on cabinet and door, with a curved towel bar handle in brushed stainless steel
White:	
SS:	Stainless Steel

Door

Standard:

SSHV:	304 grade stainless steel door with sleek pro handle vertically mounted

Also Available in:

White:

Black:

Locks

Upgrades:

KEYPAD:	Battery-powered keypad lock installed for keyless security
L Lock:	Add a single key lock to the door with the L option
AC Keypad:	Keypad lock powered by appliance power cord for keyless security

Interior

Standard Features:

GLS -Shelves:	Adjustable glass shelves included

Upgrades:

FC - Internal Fan:	Internal fan for even temperature distribution throughout the unit interior
FCGP - Fan w/Gel Packs:	Internal fan with gel packs included for a stabilized interior
SS Shelf:	Substitute standards shelves for stainless steel shelves

Exterior

Upgrades:

CAS3 3" Casters:	3" high NSF listed casters designed for institutional use, made from non-marring hard rubber in gray finish
CAS6 6" Casters:	6" high NSF listed casters
SS Hinges:	Stainless steel top and bottom hinges
Legs:	6" high leveling legs
Leg Shield:	Black kickplate extender hides unit legs
StackRack24:	

	Steel rack allows you to stack two 24" wide units
StackRack2420:	Steel rack allows you to stack a 20" wide unit on top of a 24" wide unit
PH - Probe Hole:	Factory installed probe hole for customer supplied monitoring devices
Agion Door:	Treat the door with Agion silver antimcrobial coating to reduce the growth of bacteria, fungi, molds, and other destructive microbes on appliance surface
TH Thermometer:	Add a solar powered thermometer with external temperature readout
DL1 Temperature Logger:	USB Temperature Logger records interior temperature in 15 minute intervals to a USB flash drive for analysis on a PC or Mac
Latch:	Top-mounted door latch requires manual release to open door. Ideal for yachts, RVs, coach buses, and other vehicles.
HUM Humidity Sensor:	Humidity sensor with min/max readout
Alarm:	Install a high/low temperature warning alarm with external temperature readout; meets most Health Dept. regulations
LHD:	Door reversal to left hand swing
Dolly24:	Freestanding dolly with locking casters; ships fully assembled
SCD Self-Closing Door:	Protect interior contents and reduce energy waste with the Self Closing Door Option
HG Cord:	Add a hospital grade cord equipped with green dot plug with the HG suffix
SSK Kickplate:	Add a stainless steel kickplate
DT Digital Thermostat:	Install a digital thermostat with external readout for precise temperature management
TT Thermometer:	ISO-17025 calibrated thermometer with glycol bottle provides temperature readout on the door; specify Farenheit or Celsius display upon order

TYPICAL BREAK ROOM AND COFFEE GALLEY MATRIX
OWNER SPECIFIED ACCESSORIES AND EQUIPMENT

ITEM DESCRIPTION				UTILITIES			QUANTITY	PURCHASING		INSTALLATION			NOTES
				POWER	WATER	DATA		OWNER	G.C.	OWNER	G.C.	VENDOR	
TYPICAL BREAK ROOM													
	CF/CI		22 x 22 Stainless Steel sink		●		1		●		●		
	CF/CI		Gooseneck kitchen faucet		●		1		●		●		
	CF/CI		Cabinets/ Countertops				varies		●		●		
	OF/CI	FCRS201FB	Commercial Refrigerator/ no casters	●			varies	●			●		
	OF/VI	216605300	Heavy Duty shelf clips for refrigerator				varies	●			●		
	OF/CI	DCM270BAH	Hoshizaki Commercial Ice Maker	●	●		1	●			●		
	OF/CI	PEB2060SMSS	GE Microwave	●			varies	●			●		
	OF/CI	Kimberly/Clark	PAPER TOWEL DISPENSER				1	●			●		
	OF/CI	Kimberly/Clark	SOAP DISPENSER				1	●			●		
	OF/VI	Bunn	Coffee Maker and Air Pots	●	● **		1	●				●	
	OF/VI	Alpine	Water filter		● **		1	●				●	
	OF/OI	Metro	Super Erecta metal shelving				varies	●		●			
	OF/OI		TRASH RECEPTACLE, INTERIOR				1	●		●			
	OF/OI		Recycle Station (plastic, paper, trash)				varies	●		●			
TYPICAL COFFEE GALLEY													
	CF/CI		19 x 22 stainless steel sink		●		1		●		●		
	CF/CI		Gooseneck kitchen faucet		●		1		●		●		
	OF/VI	Bunn	Coffee Maker and Air Pots	●	● **		1	●				●	
	OF/VI	Alpine	Water filter		● **		1	●				●	
	OF/VI	Summit AL752BBISSHV	ADA UC compact Refrigerator	● *			1	●				●	
	OF/OI		Recycle Station (plastic, paper, trash)				varies	●		●			
					*** Power outlet under countertop for undercounter refrigerator**								
	OF	Owner Furnished			**** Water supply and power above countertop for connection to water filter and coffee**								
	OI	Owner Installed											
	VI	Vendor Installed											
	CF	Contractor Furnished											
	CI	Contractor Installed											

OWNER SPECIFIED ACCESSORIES AND EQUIPMENT

ITEM DESCRIPTION				MODEL #	UTILITIES		QUANTITY	PURCHASING		INSTALLATION			NOTES
					POWER	DATA		OWNER	G.C.	OWNER	G.C.	VENDOR	
TYPICAL RESTROOM													
	CF/CI	KOALA KARE	DIAPER CHANGING COUNTER	KB108			1		●		●		standard for all
	CF/CI	EXCEL DRYER	ELECTRIC HAND DRYER		●		1		●		●		Public RR Only
	CF/CI		SANITARY NAPKIN DISPOSAL				varies		●		●		
	CF/CI		MIRROR				varies		●		●		
	CF/CI		GRAB BARS				varies		●		●		
	CF/CI		METAL SHELF WITH COAT HOOKS				1		●		●		
	CF/CI	Bobrick	COAT HOOKS ON PARTITION DOORS				varies		●		●		comes w/partitions
	OF/CI	Kimberly/Clark	PAPER TOWEL DISP. HANDS-FREE	09992			1	●			●		Employee RR only
	OF/CI	Kimberly/Clark	SOAP DISPENSER, hands-free	92147			varies	●			●		standard for all
	OF/CI	Kimberly/Clark	TOILET SEAT COVER DISPENSER	09506			varies	●			●		Employee RR only
	OF/CI	Kimberly/Clark	TOILET PAPER DISPENSER	09551			varies	●			●		standard for all
	OF/OI		TRASH RECEPTACLE, FREESTANDING				1	●			●		standard for all
	OF	Owner Furnished											
	OI	Owner Installed											
	VI	Vendor Installed											
	CF	Contractor Furnished											
	CI	Contractor Installed											

ONLY USED IN CERTAIN AREAS APPROVED BY METRO GENERAL SERVICES

	OF/CI	Kimberly/Clark	SOAP DISPENSER	92194			varies	●			●		depends on location
	OF/CI	Kimberly/Clark	PAPER TOWEL DISPENSER	09736			1	●			●		depends on location

Lactation Room Design

Contributed by Liz York, AIA

February 2008

The AIA collects and disseminates Best Practices as a service to AIA members without endorsement or recommendation. Appropriate use of the information provided is the responsibility of the reader.

SUMMARY

Mothers returning to the workplace after childbirth are incredibly driven to provide for their new babies but also to be productive members of the workforce. Companies that provide lactation rooms in the workplace help these employees achieve both of these goals. Following the design guidelines given here will yield a lactation room that is easy to use and offers comfort and respect to mothers.

BACKGROUND

The influx of women in the workplace starting in the 1960s was partly attributable to the development of infant formula. Formula gives mothers of newborn babies added freedom to return to work after childbirth.

However, in the past 40 years, research findings overwhelmingly in favor of breast milk over formula have instigated a marked increase in the number of mothers choosing to nurse their children for the first year of life or longer. The dramatic health benefits for infant and mother have influenced these mothers to dedicate long and tedious hours to pumping and storing breast milk when they are not with their babies. Many of these mothers return to work after just 6 to 12 weeks, and they need a dedicated place where they can comfortably and efficiently collect and store breast milk in the workplace.

ROOM REQUIREMENTS

Several times a day, a nursing mother needs to retreat to a quiet, closed room to collect expressed milk. She needs a calm restful environment with all the required elements for an efficient and safe pumping session.

A typical pumping session includes changing clothes, sitting at a desk in front of a pump for 15 to 30 minutes, placing milk in storage bottles, washing bottles and pump parts and packing them away until the next pumping session, and redressing and returning to work. At the end of the session, the pumped milk must be stored in a refrigerator or cooler. In an eight-hour work day two or three pumping sessions are normal.

Other considerations for lactation rooms, or mothers' rooms, include the need for actual and perceived privacy. Pumps can be noisy so sound dampening is important to achieve auditory comfort in and around the space. Walls, doors, and locks must be substantial and provide a good sense of security.

Lactation rooms should provide, at a minimum, a lockable door; a work surface and chair; a small utility-type sink; storage for cleaning supplies and paper towels; adequate HVAC service, including a thermostat; and well-placed electrical outlets. Telephone service and network connections for the room are also recommended to increase worker safety and productivity. Accessibility guidelines should be met for all the features of the room.

Size

A minimum footprint of 7 feet by 7 feet is recommended as it allows for a 5-foot radius circle with 24-inch deep counters on two walls. Other configurations such as 10 feet by 5 feet work well, too.

Location

Mothers' rooms should be located in a safe area accessible to all. They should not be located in areas that would not be suitable for the preparation and storage of food.

Privacy

Install a user-operated deadbolt for privacy. The best locks are indicator dead bolts that display an "occupied" message to discourage interruptions.

Sound Privacy

Walls should reach up to the structure above to minimize sound transmission over them into adjacent spaces. Install sound attenuation in walls to minimize sound transmission. Install fabric panels, curtains, carpeting, or other sound-dampening materials to minimize echoes.

Lactation Lounge Features

Required

- ☐ Campus policy
- ☐ Clock
- ☒ Comfortable chair
- ☐ Electric outlet
- ☐ Electronic Calendar for scheduling (Can be booked from the Global Address List by searching for "HOB Lactation Lounge")
- ☐ Flexible schedule
- ☐ Hooks to hang clothes
- ☐ Mirror
- ☐ Nearby sink
- ☐ Phone
- ☐ Private room with a locking door
- ☐ Privacy Curtain
- ☐ Refrigerator
- ☐ Signage
  - Lactation Lounge
  - Occupancy Indication
- ☐ Table or Desk (minimum 2'x3')

Optional

- ☐ Art and music
- ☐ Computer
- ☐ Educational Component (breastfeeding information packet for mothers)
- ☐ Lactation consultant services provided
- ☐ List of regional breastfeeding resources
- ☐ Lockers
- ☐ Permanent Marker and Labels (for breast milk storage containers)
- ☐ Sink in Lactation Room

Chair

Provide a task chair suitable for a workstation. Seat, back, armrest, lumbar, tension, and height adjustments are preferable. Casters are also important to allow the user freedom of movement when hands are occupied with bottles of milk and pump parts.

Table/Counter

Provide a minimum 20-inch deep by 30-inch wide plastic laminate or solid work surface for the pump and bottles to rest on in front of the task chair. Provide a 30-inch wide clear knee space beneath the counter. Provide above counter outlets at the work area. If a telephone is provided, it should be within easy reach of the work area.

Sink

Provide a sink and faucet combination deep enough to wash bottles and pump parts. Goose neck or kitchen type faucets are recommended. If possible, locate the sink adjacent to the work area.

Lighting and HVAC

Task lighting should be provided over the sink and the work area. Overhead lighting is also appropriate if light levels at the work surfaces are adequate. Temperature should be maintained year-round at a comfortably warm level such as in a dressing room. Install a thermostat in the room to increase user control and thermal comfort.

Milk Storage

Install a midsize or compact refrigerator for milk storage. Under-counter models help conserve floor space but should not take up the knee space beneath the work area.

Accessories

Useful accessories in a mothers' room include a trash can, a paper towel dispenser, a coat rack or coat hooks, a full-length mirror, a magazine rack, and a bulletin board. If many mothers will be sharing the room, installing a clipboard or bulletin board outside the door will help schedule room use.

ABOUT THE CONTRIBUTOR

Liz York, AIA, is a mother of three and project architect in Atlanta. She may be contacted at lby8@cdc.gov.

RESOURCES

For More Information on This Topic

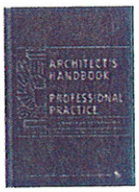

See also "Accessibility Compliance" by John P.S. Salmen, AIA, and "Sustainable Building Design" by Muscoe Martin, AIA, in *The Architect's Handbook of Professional Practice*, 13th edition, Chapter 18, pages 551 and 656, respectively. The *Handbook* can be ordered from the AIA Bookstore by calling 800-242-3837 (option 4) or by sending an e-mail to bookstore@aia.org.

More Best Practices

The following AIA Best Practices provide additional information related to this topic:

18.03.04	Ventilation for Durability in Residential Design
18.18.03	Resource Review: *Green Guide for Health Care*
18.01.01	The Optimum Performance Home

Feedback

The AIA welcomes member feedback on Best Practice articles. To provide feedback on this article, please contact bestpractices@aia.org.

Key Terms

- Design
- Use design
- Accessibility
- Universal design

Return to Top

POLICY: 4.13 LACTATION SITES AND BREAK TIMES

POLICY

The Metropolitan Government recognizes the health advantages of breastfeeding for infants and mothers. To ensure encouragement and support for lactating mothers who are employed by Metro, we are implementing a lactation policy in accordance with the 2010 Patient Protection and Affordable Care Act ("PPACA").

GENERAL

Employers are required to provide reasonable break times for an employee to express breast milk as needed for her nursing child up to one (1) year after the child's birth. A space that is shielded from view and free from intrusion from coworkers and the public must be provided for the exclusive purpose of expressing breast milk. Under the PPACA, a bathroom, even if private, is **not** a permissible designated space.

GUIDELINES

TIME AND LOCATION OF BREAKS:

Breastfeeding employees shall be permitted flexible scheduling for expressing breast milk. As the frequency of breaks as well as the duration and location of each break may vary, the supervisor and employee will agree upon a plan.

A private lactation room shall be made available to breastfeeding employees. All rooms should be secure, have an electrical outlet and telephone, as well as be easily accessible to a refrigerator and sink. The Appointing Authority should consult with Metro Human Resources and/or the Health Department for further guidelines on what constitutes a reasonable lactation space.

APPROVED: 7/12/2011
EFFECTIVE: 7/12/2011

Eder Flag Manufacturing Co. Inc.
1000 W. Rawson Avenue
Oak Creek, WI 53154

ALUMINUM FLAGPOLE INSTALLATION INSTRUCTIONS

1. Dig foundation hole four to six times the butt diameter of the flagpole.

2. Set the foundation tube so that the top of the foundation tube is two inches above grade.

3. Plumb foundation tube and brace sot that it will not move during the pouring of the concrete.

4. Pour concrete and trowel up even with top of foundation tube. Keep inside of foundation tube dry.

5. Lay pole on sawhorses and unwrap. For sectional poles check both ends for any burrs. If any are found, file them off and wipe the areas clean. Fully grease jamb sleeves. Align the arrows and/or numbers on each section and jamb together. Numbers must be identical for a proper fit.

6. Screw the truck into the top of the pole, using a wrench to assure a tight fit. If cap-style truck is used, be sure set screws are well tightened.

7. Screw ball into truck and tighten ball set screw. Ball should be tightened into truck tightly by turning stem of ball with wrench. Do not tighten by turning ball proper.

8. If flash collar is provided with pole, slide collar on from the bottom of pole to above cleat level and attach cleat with one screw to hold flash collar until after erection of pole. Then remove cleat, slide collar down, and replace cleat. Caulk between the collar and the pole with waterproof sealant (like roofing cement or asphaltum sealant).

9. Thread rope through sheave (pulley) of truck and tie the ends together so that the rope will not drop out of the sheave during erection of the pole.

10. Erect pole into foundation tube and center it. Turn so that the cleat(s) holes are in the direction desired.

11. Place wood wedges (supplied by others) between the pole and the foundation tube and plumb pole.

12. Pack dry sand between the pole and foundation tube. Leave two inches void at the top and fill with waterproof sealant to keep water out of the sand.

13. Loop snaps on rope, space properly for flag size being used.

IMPORTANT: When erecting sectional flagpoles, never place your sling above the joint. Sling must be positioned below the joint, thus eliminating the possibility that the two sections could separate during hoisting.

ALSO: For yardarm-type flagpoles, please locate (3) pre-drilled holes approximately 1/3 down from top of pole. Take the 6” x 9” plate and attach at this point. Then attach U-bolts around the yardarm and through the plate; Secure nuts and washers, including the (4) small acorn nuts for the ends of the U-bolts.

Rev. 10-24-2003

Project: _____

LEED Submittal Form

Please provide the following general information:	
Subcontractor/Material Provider:	
Name of Manufacturer:	
Specification Number:	
Date Submitted:	
Contact Name & Phone:	

Specific Product Information

Material (product name/number):

A. _____

B. _____

C. _____

Material Cost (excluding labor & equipment):

$ _____

$ _____

$ _____

Regional Materials

For each material listed above, provide the address AND the mileage from the project site to the point of final manufacturing and the point of raw materials extraction (if there are multiple raw materials, provide information for the one furthest from the project site). Include documentation to verify all addresses and/or distances (must be a statement on Manufacturer Letterhead, or Manufacturer's Data Sheets).

Point of Manufacturing:	Miles to Job Site	Point of Raw Material Extraction:	Miles to Job Site	Documentation Attached:
A. _____		A. _____		☐
B. _____		B. _____		☐
C. _____		C. _____		☐

Recycled Content

For each material listed above, provide the recycled content in terms of post-consumer % and/or pre-consumer % (post-industrial %), if applicable. Include documentation to verify these values (must be a statement on Manufacturer Letterhead, or Manufacturer's Data Sheets).

A. Post-consumer _____ %	A. Pre-consumer _____ %	☐
B. Post-consumer _____ %	B. Pre-consumer _____ %	☐
C. Post-consumer _____ %	C. Pre-consumer _____ %	☐

Rapidly Renewable Material

For each material listed above that contains rapidly renewable material, please provide the name of the renewable material and the percentage of that material within the total product. Include documentation to verify these values (must be a statement on Manufacturer Letterhead, or Manufacturer's Data Sheets).

Name of Rapidly Renewable Material(s):

A. _____	_____ % of total product	☐
B. _____	_____ % of total product	☐
C. _____	_____ % of total product	☐

Project: _____

Low Emitting Materials

For any VOC or Urea-Formaldehyde emitting materials listed above, indicate that the appropriate environmental standards are met. Include documentation confirming compliance with these standards (must be a statement on Manufacturer Letterhead, or Manufacturer's Data Sheets).

	N/A	Product Complies		Documentation Attached:
IEQc4.1	☐	☐	Adhesives, Sealants and Sealant Primers do not exceed the VOC limits established in the South Coast Air Quality Management District (SCAQMD) Rule #1168. *Example products: Painter's caulk, plumber's caulk, fire-stopping sealant, duct sealant, etc.*	☐
IEQC4.2	☐	☐	Interior Paints, Coatings and Primers do not exceed the VOC content limits established in Green Seal Standard GS-11 for Paints.	☐
IEQc4.2	☐	☐	Clear wood finishes, floor coverings, stains, sealers, and shellacs applied to interior elements do not exceed the VOC content limits established in South Coast Air Quality Management District (SCAQMD) Rule 1113, Architectural Coatings.	☐
IEQc4.3	☐	☐	Flooring System products meet the testing and product requirements of the Carpet and Rug Institute's Green Label Plus program OR meet the testing and product requirements of the "FloorScore" certification.	☐
IEQc4.4	☐	☐	Composite Wood, Agrifiber and Lamination Adhesive products contain No Added Urea-Formaldehyde (NAUF) resins.	☐

New Wood Products

Provide information for wood-based products containing NEW WOOD. greenSTUDIO will request a vendor's invoice at time of delivery that includes cost, COC# and FSC claim for each product. Vendor invoices are required for all NEW WOOD containing products, regardless of FSC certification.

Vendor's Invoice Will Include:				
Est. Cost	COC#	FSC Claim	% New Wood	
☐	☐	☐	☐	Wood Product A: _____ Vendor: _____ COC #: _____ Estimated Cost: _____ FSC Claim: _____ % of New Wood: _____
☐	☐	☐	☐	Wood Product A: _____ Vendor: _____ COC #: _____ Estimated Cost: _____ FSC Claim: _____ % of New Wood: _____
☐	☐	☐	☐	Wood Product A: _____ Vendor: _____ COC #: _____ Estimated Cost: _____ FSC Claim: _____ % of New Wood: _____