OPTIPLEX 780

Organizations that demand versatile mainstream desktop computing and robust remote systems management will find a cost-effective solution in the new OptiPlex™ 780 desktops. OptiPlex 780 empowers IT with Intel® vPro™ streamlined remote systems management, data and asset-security solutions, and the kind of chassis serviceability that helps keep working staff productive. The Intel® Core™2 Quad Processor and 88% efficient power supply option on the OptiPlex 780 provide the perfect combination of technology to drive up performance. Because the OptiPlex 780 offers a breadth of configuration options, you can build a customized solution that works for your unique business needs. The stability that the OptiPlex 780 delivers provides the strong foundation you need for ongoing success.

STABILITY AND MANAGEMENT YOU CAN BUILD ON

Built on proven technology, the OptiPlex delivers stability you can depend on.

- Long-range planning support with a targeted 15-month lifecycle, stable images, globally available configurations and managed transitions
- Dell Client Manager helps make OptiPlex easy to own and easy to manage, with centralized hardware and software management, inventory control, automation of routine tasks and a unified, expandable feature set
- Dell Distributed Device Management Services helps you track dispersed assets, distribute software and manage patches - no matter where your PC clients are located on the internet

SECURITY AND DATA PROTECTION YOU CAN DEPEND ON

Choose the right kind of security options to help protect your assets, safeguard data and meet compliance.

- Streamline security operations with Dell Client Manager or Dell Distributed Device Management
- Protect against unauthorized access with built-in TPM 1.2*, Smart Card keyboard and Chassis Intrusion Switch
- Enable secure data protection with Full Disk Encryption Drive or Solid State Drive
- Protect from drive malfunction with RAID 1 storage technology
- Improve login and password authentication, security device management and disk encryption control with Dell ControlPoint™
- Automate, schedule and control backup with Dell Backup and Recovery Manager

WORKING FOR YOUR WORKFORCE

With their highly customizable global service and support offerings, OptiPlex desktops empower IT staff with tools designed for every challenge across the IT life cycle. Give your workforce the desktop features and functions that keep them productive:

- Choose high-performance Intel® Core™2 Quad Processors to provide the power for high productivity
- Improve multi-tasking through integrated video support for dual monitors and an optional graphics card to support up to four monitors
- Time-saving tool-less chassis design and Dell-innovative DirectDetect troubleshooting LEDs were designed to help reduce maintenance and service costs
- Intel® vPro™ technology enables remote system repairs and thereby reduces desk-side visits

ENERGY-EFFICIENCY AT WORK

The OptiPlex 780 employs energy-efficient technologies that are designed to lower the impact on the environment while helping to reduce your organization's energy consumption cost.

- Reduce power consumption — and costs — with optional up to 88% efficient power supplies from Dell
- Minimize power usage with Dell Energy Smart power-management technology (available on select configurations) and recyclable packaging
- Promote environmental sensitivity with the OptiPlex 780 ENERGY STAR® 5.0 and EPEAT® Gold qualified systems (available on select configurations)

OptiPlex 780 Technical Specifications

Processor Options	Intel® Core™2 Quad (* not available on USFF); Intel® Core™2 Duo; Intel® Pentium® Dual Core; Intel® Celeron® Dual Core; Intel® Celeron®
Chipset	Intel® Q45 Express Chipset w/ICH10DO
Operating System Options	Microsoft® Windows 7® Basic; Microsoft® Windows 7® Home Premium; Microsoft® Windows 7® Professional, Microsoft® Windows 7® Ultimate Microsoft® Windows Vista® Home Basic; Microsoft® Windows Vista® Business , Microsoft® Windows Vista® Ultimate; Microsoft® Windows® XP Professional Downgrade via Windows 7® Professional Microsoft® Windows® XP Professional Downgrade via Windows 7® Ultimate Microsoft® Windows Vista® Business Downgrade via Windows 7® Professional Ubuntu® Linux® (select countries); FreeDOS for N-series
Graphic Options	All chassis- Integrated Intel® Graphics Media Accelerator 4500*; MT/DT/SFF- DVI Adapter card; 256MB ATI® RADEON® HD 3450*; 256MB ATI RADEON HD 3470*; 256MB NVIDIA GeForce 9300 GE*; 512MB NVIDIA NVS420*
Memory Options	MT/DT/SFF- Four DIMM slots; Non-ECC dual-channel 1066MHz DDR3 SDRAM*, up to 8GB* USFF- Two DIMM slots; Non-ECC dual-channel 1066MHz DDR3 SDRAM* , up to 4GB*
Networking	MT/DT/SFF- Integrated Intel® 82567LM Ethernet LAN 10/100/1000; optional Broadcom® NetXtreme® 10/100/1000 PCIe card; optional Broadcom® 1505 PCIe WLAN card (802.11 Draft-N) USFF- Integrated Intel® 82567LM Ethernet LAN 10/100/1000; optional Broadcom® 1510 mini PCIe WLAN card (802.11 Draft-N)
Standard I/O Ports	MT/DT/SFF- 8 External USB 2.0 ports and 1 Internal USB 2.0; 1 Parallel; 1 Serial; 1 RJ-45; 1 VGA; 1 Display Port; 1 eSATA; 2 Line-in (stereo/microphone); 2 Line-out (headphone/speaker) USFF- 7 External USB 2.0 ports; 1 Serial; 1 RJ-45; 1 VGA; 1 Display Port; 1 eSATA; 2 Line-in (stereo/microphone); 2 Line-out (headphone/speaker)
Hard Drive Options	MT/DT/SFF- 3.5" Hard Drives: up to 500GB* 7200 RPM SATA 3.0GB/s, up to 160GB* 10K RPM SATA 3.0GB/s MT/DT/SFF- 2.5" Hard Drives: up to 250GB* 7200 RPM SATA 3.0GB/s, 160GB* SATA Full Disk Encryption, 64GB* SATA Solid State Drive USFF- 2.5" Hard Drives: up to 320GB* 7200 RPM SATA 3.0GB/s Drives; 160GB* SATA Full Disk Encryption Drives; up to 128GB* SATA Solid State Drives All chassis- Supports Dell's Flexible Computing Solution diskless option MT/DT/SFF- RAID 0 & 1 support on select configurations

Chassis Options	MINITOWER	DESKTOP	SMALL FORM FACTOR	ULTRA SMALL FORM FACTOR
Dimensions (H x W x D) Inches/(cm)	16.1 x 7.4 x 17.0 / (40.8 x 18.7 x 43.3)	4.5 x 15.7 x 13.9 / (11.4 x 39.9 x 35.3)	3.65 x 12.4 x 13.4 / (9.26 x 31.4 x 34.0)	9.4" x 2.6" x 9.3" / (23.9cm x 6.5cm x 23.6cm)
Weight (lbs/kg)	25.8 / 11.7	18.2 / 8.26	15.0 / 6.8	7.0lb / 3.2kg
Number of Bays	2 internal 3.5" 1 external 3.5" 2 external 5.25"	1 internal 3.5" 1 external 3.5" 1 external 5.25"	1 internal 3.5" 1 external 3.5" (slimline) 1 external 5.25" (slimline)	1 external SATA RMSD (slim) 1 SATA 2.5" internal HDD
Expansion Slots	1 full height PCIe x16 1 full height PCIe x1 2 full height PCI	1 low-profile PCIe x16 2 low-profile PCI (Optional riser converts the PCIe and PCI into full height slots)	1 low-profile PCIe x16 1 low-profile PCI	N/A
DIMM Slots	4	4	4	2
Power Supply Unit (PSU)[1]	305W Standard PSU or optional 255W 88% Efficient PSU; Energy Star 5.0 compliant, Active PFC	255W Standard PSU or optional 255W 88% Efficient PSU; Energy Star 5.0 compliant, Active PFC	235W Standard PSU or optional 235W 88% Efficient PSU; Energy Star 5.0 compliant, Active PFC	180W up to 90% Efficient Internal PSU, ENERGY STAR 5.0 compliant, Active PFC

Peripheral Options	**Monitors:** **Dell G-Series and Entry Standard and Widescreen Flat Panel Analog:** Dell G2210, G2410, E170S, E190S, E1709W, E1909WOD, E1910H, E1910, E2010H, E2009W, E2210H, E2210, E2310H **Dell Professional Digital Standard and Widescreen Flat Panel:** Dell P170S, P190S, 1909W, 2009W, P2010H, P2210H, P2210, P2310H **Dell UltraSharp™ Digital Standard and Widescreen Flat Panel, Adjustable Stand:** Dell 1907FPV, 2007FP, 2209WA, U2410 **All-in-One Stand with Display included:** 19" Standard, 19" Wide and 22" Wide **Additional USFF Options:** Wall/ Under-desk mount, Stand only without Display
	Keyboards: Dell USB Entry Keyboard, Dell QuietKey™ Keyboard, Dell Multimedia Pro Keyboard, Dell Smartcard Keyboard
	Mouse: Dell USB Optical Mouse, Dell Laser Mouse
	Audio Speakers: Internal Dell Business audio speaker, Dell AX210 2.0 and AY410 2.1 Desktop Speakers; Dell AX510 and AX510PA Sound Bar Speakers
Security Options	Trusted Platform Module (TPM) 1.2, Non-TPM (in select countries only), Dell ControlPoint, Chassis lock slot and lock loop support, optional Chassis Intrusion Switch, Setup/BIOS Password, I/O Interface Security, Smart Card keyboards, Intel® Trusted Execution Technology, BIOS support for optional Computrace®*
Systems Management Options	Intel® vPro Technology Enabled (iAMT Professional 5.x); Intel® vPro Technology Disabled (iAMT Professional 5.x); Intel® Standard Manageability; No Out-of-Band Systems Management
Environmental and Regulatory Standards	**Environmental Standards (eco-labels):** (eco-labels): ENERGY STAR® 5.0 (select configurations), EPEAT Gold (select configurations), CECP, TCO 05, WEEE, Japan Energy Law, CES, Japan Green PC, FEMP, South Korea Eco-label, EU RoHS, China RoHS **Other Environmental Options:** Dell Energy Smart settings (select configurations); Carbon Off-set; System Recycle (Asset Recovery Service)
Warranty and Service Options	Limited Hardware Warranty*; Standard 3-year Next Business Day On Site Service after Remote Diagnosis* (3-3-3); Optional 3-year Dell ProSupport™ for IT*; 4 year and 5 year extended warranty, service and support options

[1] This form factor utilizes a more efficient Active Power Factor Correction (APFC) power supply. Dell recommends only Universal Power Supplies (UPS) based on Sine Wave output for APFC PSUs, not an approximation of a Sine Wave, Square Wave, or quasi-Square Wave (see UPS technical specifications). If you have questions, please contact the manufacture to confirm the output type.

*Important Information:

System Memory and Graphics: Significant system memory may be used to support graphics, depending on system memory size and other factors
4GB or Greater System Memory Capability: A 64-bit operating system is required to support 4GB or more of system memory.
Hard Drive: GB means 1 billion bytes and TB equals 1 trillion bytes; actual capacity varies with preloaded material and operating environment and will be less.
TPM: TPM is not available in all regions.
Next Business Day Onsite Service after Remote Diagnosis: Remote Diagnosis is determination by online/phone technician of cause of issue; may involve customer access to inside of system and multiple or extended sessions. If issue is covered by Limited Hardware Warranty (www.dell.com/warranty) and not resolved remotely, technician and/or part will be dispatched, usually within 1 business day following completion of Remote Diagnosis. Availability varies. Other conditions apply.
Limited Hardware Warranty: For copy of Ltd Hardware Warranty, write Dell USA LP, Attn: Warranties, One Dell Way, Round Rock, TX 78682 or see www.dell.com/warranty.
Dell Services: Availability and terms of Dell Services vary by region. For more information, visit www.dell.com/servicedescriptions.
Computrace: Not a Dell offer. Certain conditions apply. For full details, see terms and conditions at www.lojackforlaptops.com.

Windows®. Life without Walls™. Dell recommends Windows 7.

E157FPT 15-inch Touch-screen Flat Panel Monitor with 1-Year Advanced Exchange Warranty

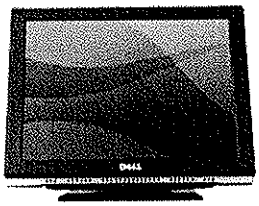

The E157FPT 15" Touch-screen Flat Panel Monitor from Dell™ offers the ideal touch screen solution for Point-of-Sale, self-service kiosks, and hospitality applications. The monitor incorporates Surface Acoustical .. Full Description

Dell Price $480.00

As low as $15.00/month*[1]
Apply | Learn More

Add to Cart

Usually Ships: 1-2 Days

Manufacturer Part# : XM178 | Dell Part# : E157T1Y

Be the first to write a review. | Share this Product:

Overview | Tech Specs | Customer Ratings | Glossary And Resource

Tech Specs

General	
Display Type	LCD display / TFT active matrix
Width	13.4 in
Depth	5.2 in
Height	13.3 in
Weight	5.5 lbs
Enclosure Color	Black
Bundled with	1-Year Advanced Exchange Warranty
Display	
Diagonal Size	15"
Viewable Size	15"
Dot Pitch / Pixel Pitch	0.297 mm
Max Resolution	1024 x 768 / 75 Hz
Color Support	Up to 16.2 million colors
Max Sync Rate (V x H)	76 Hz x 61 kHz
Response Time	16 ms
Display Positions Adjustments	Tilt
Display Screen Coating	Anti-glare
Signal Input	VGA
Image	
Image Aspect Ratio	4:3
Image Brightness	250 cd/m2
Image Contrast Ratio	450:1
Image Max H-View Angle	120
Image Max V-View Angle	140
Video Input	
Analog Video Signal	RGB
Audio Output	
Type	Speaker(s) - integrated
Input Device	
Type	Touch-screen
Movement Detection Technology	Surface acoustic wave
Expansion / Connectivity	
Interfaces	1 x VGA - 15 pin HD D-Sub (HD-15) ¦ 1 x USB - 4 pin USB Type B ¦ 1 x serial RS-232 - 9 pin D-Sub (DB-9) ¦ 1 x audio line-in - mini-phone stereo 3.5 mm
Miscellaneous	
Cables Included	1 x VGA cable
Flat Panel Mount Interface	100 x 100 mm
Features	Security lock slot (cable lock sold separately), wall mountable, cable organizer
Works with Windows Vista	Software and devices that carry the Works with Windows Vista logo have been tested for baseline compatibility with PC's running.
Power	
Form Factor	Internal
Voltage Required	AC 120/230 V (50/60 Hz)
Power Consumption Operational	26 Watt
Power Consumption Stand by / Sleep	1 Watt
Environmental Standards	
ENERGY STAR Qualified	Yes
Manufacturer Warranty	
Service & Support	1 year warranty
Service & Support Details	Limited warranty - replacement - 1 year - shipment - response time: next business day
Environmental Parameters	
Min Operating Temperature	32 °F
Max Operating Temperature	104 °F
Humidity Range Operating	10 - 80%

Large Text

TVs | Electronics

© 2010 Dell | About Dell | Terms of Sale | Unresolved Issues | Privacy | About Our Ads | Dell Recycling | Contact | Site Map | Visit ID | Feedback

Offers subject to change, not combinable with all other offers. Taxes, shipping, handling and other fees apply. Valid for new U.S. online purchases through the Dell Home Electronics and Accessories site and for phone orders of electronics and accessories purchased without a system only. Free shipping and handling offer available in Continental (except Alaska) U.S. only. Availability of E&A products varies and quantities may be limited. Dell reserves the right to cancel orders arising from pricing or other errors.

Purchase limit of 10 same items per order

snNP08

Windows®. Life without Walls™. Dell recommends Windows 7.

OptiPlex 780-USFF All-in-One Stand for Dell OptiPlex 780 USFF Desktop

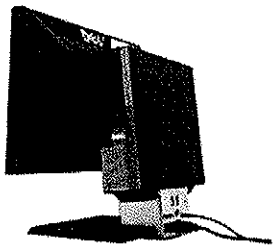

The Dell™ OptiPlex 780-USFF All-in-One Stand is a unique mounting solution with integrated cable management designed to adapt to your unique environment. The built-in handle enables transport of fully configured ... Full Description

Dell Price $139.99

As low as $15.00/month*[1]
Apply | Learn More

Add to Cart

Usually Ships: Within 24 Hours

Manufacturer Part# : 3X5P2 | Dell Part# : 317-3893

Be the first to write a review. | Share this Product:

Overview | Tech Specs | Customer Ratings | Glossary And Resource

Highlights

- Cable management provisions on stand to guide cables cleanly from stand
- Lock mechanism to secure system to stand; Kensington-type cable lock support to secure system and stand
- Supports headless AIO configuration

Overview

The Dell™ OptiPlex 780-USFF All-in-One Stand is a unique mounting solution with integrated cable management designed to adapt to your unique environment. The built-in handle enables transport of fully configured stand, system and flat panel. Additionally, the cable cover secures connected cables so that they cannot be accidentally disconnected or removed.

Manufacturer Part# : 3X5P2
Dell Part# : 317-3893

Offers subject to change, not combinable with all other offers. Taxes, shipping, handling and other fees apply. Valid for new U.S. online purchases through the Dell Home Electronics and Accessories site and for phone orders of electronics and accessories purchased without a system only. Free shipping and handling offer available in Continental (except Alaska) U.S. only. Availability of E&A products varies and quantities may be limited. Dell reserves the right to cancel orders arising from pricing or other errors.

Purchase limit of 10 same items per order.

snNP08

UltraSharp 1909W 19-inch Widescreen Flat Panel Monitor With Stand, EPG with 3-Year Warranty and OptiPlex 780-USFF All-in-One Stand

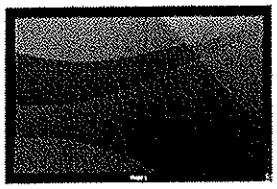

1909W: Enjoy true performance on the spacious UltraSharp 1909W 19-inch Flat Panel Monitor from Dell™. Featuring a stunning resolution of 1440x900 pixels, 1909W is designed to deliver a rich, multimedia experience. .. Full Description

Price $242.18

Usually Ships: Within 24 Hours

Manufacturer Part# : V8MM9 | Dell Part# : P1909W3 | UNSPSC: 4321190200

Be the first to write a review. | Share this Product:

Overview Tech Specs Customer Ratings Glossary And Resource

Tech Specs

General	
Display Type	LCD display / TFT active matrix
Built-in Devices	USB hub
Width	17.4 in
Depth	6.9 in
Height	12.4 in
Weight	12.3 lbs
Enclosure Color	Black
Display	
Diagonal Size	19" - widescreen
Viewable Size	19"
Dot Pitch / Pixel Pitch	0.2835 mm
Max Resolution	1440 x 900 / 75 Hz
Max Sync Rate (V x H)	75 Hz x 83 kHz
Response Time	5 ms
Controls / Adjustments	Brightness, contrast, input select
Display Positions Adjustments	Height, pivot (rotation), swivel, tilt
Display Screen Coating	Anti-glare, hard coating
Signal Input	DVI-D, VGA
Features	UltraSharp, HDCP, 72% color gamut
Image	
Image Brightness	300 cd/m2
Image Contrast Ratio	1000:1
Image Max H-View Angle	160
Image Max V-View Angle	160
Expansion / Connectivity	
Interfaces	1 x DVI-D - 24 pin digital DVI ¦ 1 x VGA - 15 pin HD D-Sub (HD-15) ¦ 4 x Hi-Speed USB downstream - 4 pin USB Type A ¦ 1 x Hi-Speed USB upstream - 4 pin USB Type B
Miscellaneous	
Cables Included	1 x VGA cable ¦ 1 x DVI cable ¦ 1 x USB cable
Flat Panel Mount Interface	100 x 100 mm
Features	Security lock slot (cable lock sold separately), wall mountable
Compatible with Windows 7	"Compatible with Windows 7" software and devices carry Microsoft's assurance that these products have passed tests for compatibility and reliability with 32-bit and 64-bit Windows 7.
Compliant Standards	Plug and Play
Software / System Requirements	
Software Included	Driver
Environmental Standards	
EPEAT Compliant	EPEAT Gold
ENERGY STAR Qualified	Yes
Manufacturer Warranty	
Service & Support	3 years warranty
Service & Support Details	Limited warranty - 3 years

Dell PowerEdge R210

Technical Guide

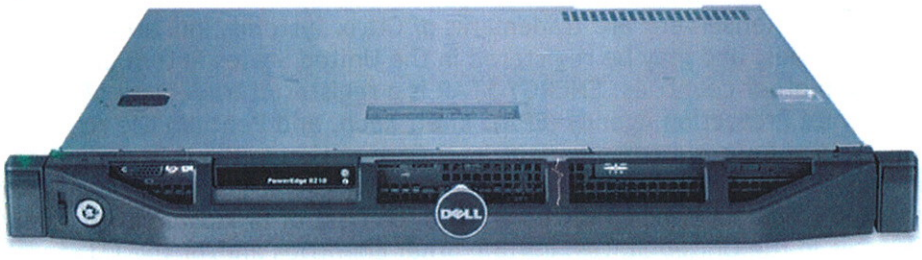

1-socket 1U rack server providing the features you need without a lot of the unnecessary extras.

This document is for informational purposes only. Dell reserves the right to make changes without further notice to any products herein. The content provided is as is and without express or implied warranties of any kind.

Dell, PowerEdge, PowerVault, OpenManage, and ReadyRails are trademarks of Dell, Inc. Citrix® and XenServer™ are trademarks of Citrix Systems, Inc. and/or one or more of its subsidiaries, and may be registered in the United States Patent and Trademark Office and in other countries. ENERGY STAR is a registered trademark of the Environmental Protection Agency (EPA). Intel, Xeon, and Pentium are registered trademarks and Core is a trademark of Intel Corporation in the U.S. and other countries. HP and COMPAQ are trademarks of Hewlett-Packard Company. Broadcom is a registered trademark and NetXtreme is a trademark of Broadcom Corporation and/or its affiliates in the United States, certain other countries and/or the EU. CommVault Galaxy® or Simpana® are registered trademarks of CommVault Systems, Inc. InfiniBand is a registered trademark and service mark of the InfiniBand Trade Association. Matrox is a registered trademark of Matrox Electronic Systems Ltd. Microsoft and SQL Server are either registered trademarks or trademarks of Microsoft Corporation in the United States and/or other countries. Mellanox is a registered trademark of Mellanox Technologies, Inc. and ConnectX, InfiniBlast, InfiniBridge, InfiniHost, InfiniRISC, InfiniScale, and InfiniPCI are trademarks of Mellanox Technologies, Inc. Red Hat is a registered trademark of Red Hat, Inc. in the United States and other countries. Linux is a registered trademark of Linus Torvalds. Symantec and Backup Exec are trademarks owned by Symantec Corporation or its affiliates in the U.S. and other countries. Novell, SUSE, PlateSpin, and PowerConvert are registered trademarks of Novell, Inc. QLogic and PathScale are registered trademarks of Qlogic Corporation. VMware is a registered trademark and vSphere is a trademark of VMware, Inc. in the United States and/or other jurisdictions. Vizioncore, vRanger, vConverter, and vFoglight are trademarks of Vizioncore Inc. in the United States of America and other countries. Winbond is a registered trademark of Winbond Electronics Corporation. Other trademarks and trade names may be used in this document to refer to either the entities claiming the marks and names or their products. Dell disclaims proprietary interest in the marks and names of others.

©Copyright 2010 Dell Inc. All rights reserved. Reproduction or translation of any part of this work beyond that permitted by U.S. copyright laws without the written permission of Dell Inc. is unlawful and strictly forbidden.

Initial Release April 2010

Table of Contents

1 Product Comparison 7
2 New Technologies 11
2.1 Overview 11
2.2 Detailed Information 11
2.2.1 System Management 11
2.2.2 Software RAID 11
2.2.3 eSATA 13
3 System Overview 14
4 Mechanical 16
4.1 Chassis Description 16
4.2 Dimensions and Weight 16
4.3 Front Panel View and Features 17
4.4 Back Panel View and Features 18
4.5 Power Supply Indicators 18
4.5.1 Power Button LED 18
4.5.2 System Status/ID LED 18
4.6 NIC Indicators 18
4.7 Side View 19
4.8 Internal Chassis View 20
4.9 Rails 21
4.10 Fans 22
4.11 Control Panel LED 22
4.12 Security 22
4.12.1 Top Cover Lock Mechanism 22
4.12.2 Bezel 22
4.12.3 Trusted Platform Module (TPM) 22
4.12.4 Power Switch Security 23
4.12.5 Intrusion Alert 23
4.12.6 Secure Mode 24
4.13 USB Ports 24
4.14 Battery 24
4.15 Field Replaceable Units (FRU) 25
4.16 User Accessible Jumpers, Sockets, and Connectors 25
5 Power, Thermal, Acoustic 26
5.1 Power Supplies 26
5.2 Power Supply Connectors on the Planar 26
5.3 Environmental Specifications 27
5.3.1 Temperature 27
5.3.2 Relative Humidity 27
5.3.3 Maximum Vibration 27
5.3.4 Maximum Shock 27
5.3.5 Altitude 27
5.3.6 Airborne Contaminant Level 27
5.4 Power Supply Unit (PSU) Specifications 28
5.5 ENERGY STAR® Compliance 28
5.6 Thermal 28

5.7 Acoustics ... 29
6 Processors ... 31
6.1 Overview ... 31
6.2 Supported Processors ... 31
6.3 Processor Configurations ... 31
7 Memory ... 32
7.1 Overview ... 32
7.2 DIMMs Supported ... 32
7.3 Slots/Risers ... 33
7.4 Speed ... 33
7.5 Sparing ... 33
7.6 Mirroring ... 33
7.7 RAID ... 33
8 Chipset ... 34
8.1 Overview ... 34
8.2 Direct Media Interface ... 34
8.3 PCI Express Interface ... 34
8.4 SATA Interface ... 34
8.5 AHCI ... 34
8.6 PCI Interface ... 34
8.7 Low Pin Count (LPC) Interface ... 35
8.8 Serial Peripheral Interface (SPI) ... 35
8.9 Compatibility Module ... 35
8.10 Advanced Programmable Interrupt Controller (APIC) ... 35
8.11 USB Interface ... 35
8.12 Real-Time Clock (RTC) ... 36
8.13 GPIO ... 36
8.14 Enhanced Power Management ... 36
8.15 System Management Features ... 36
8.15.1 TCO Timer ... 36
8.15.2 Processor Present Indicator ... 36
8.15.3 Error Code Correction (ECC) Reporting ... 36
8.15.4 Function Disable ... 37
8.16 System Management Bus (SMBus 2.0) ... 37
8.17 Intel Anti-Theft Technology ... 37
8.18 Intel Virtualization Technology for Directed I/O ... 37
8.19 JTAG Boundary-Scan ... 38
9 BIOS ... 39
9.1 Overview ... 39
9.2 ACPI ... 40
9.3 Power Management Modes ... 40
9.3.1 Dell Active Power Controller ... 40
9.3.2 Power Saving BIOS Setting (OS Control) ... 41
9.3.3 Maximum Performance ... 41
10 I/O Slots ... 43
10.1 Overview ... 43
10.2 PCI Devices ... 44
10.3 Boot Order ... 47
10.4 NICs ... 47

11 Storage 48
11.1 Overview 48
11.2 Drives 48
11.3 RAID Configurations 49
11.4 Optical Disk Drive (ODD) 49
11.5 Tape Drives 50
12 Video and Audio 51
12.1 Video 51
12.2 Audio 51
13 Rack Information 52
13.1 Overview 52
13.2 Rails 52
13.3 Cable Management Arm (CMA) 52
14 Operating Systems 53
15 Virtualization 55
16 Systems Management 56
16.1 Overview 56
16.2 Server Management 56
16.3 Embedded Server Management 57
16.4 Lifecycle Controller and Unified Server Configurator 57
16.5 iDRAC6 Express 58
16.6 iDRAC6 Enterprise 58
17 Peripherals 61
17.1 USB 61
17.2 USB Device 61
17.3 External Storage 62
18 Packaging Options 62

Tables

Table 1. Comparison of PowerEdge Server Features 8
Table 2. Comparison Overview PERC S100 and S300 12
Table 3. eSATA Modes 13
Table 4. Product Feature Summary 14
Table 5. Overall Dimensions and Weight 16
Table 6. Specific Measurements 16
Table 7. TPM Pin Signals 23
Table 8. Power Supply 24 Pins and Signals 26
Table 9. Power Supply 4 Pins and Signals 26
Table 10. PSU Specifications 28
Table 11. Acoustical Specifications 29
Table 12. Processor Information 31
Table 13. Supported Processor Configurations 32
Table 14. Wake Up Events and States 40
Table 15. Summary of R210 Power Management Features 41
Table 16. Power Profiles that R210 BIOS will Expose in BIOS Setup 42

Table 17. I/O Slot Information 45
Table 18. PCI Card Dimensions 46
Table 19. Bandwidth, Quantities, and Priorities 46
Table 20. Available Drives 48
Table 21. RAID Configurations 49
Table 22. Supported Tape Drives 50
Table 23. PowerEdge R210 Rail Information 52
Table 24. Supported Microsoft Operating Systems 53
Table 25. Supported Linux Operating Systems 54
Table 26. Supported Virtualization OS 55
Table 27. Unified Server Configurator Features and Description 58
Table 28. Features List for BMC, iDRAC6, and vFlash 59
Table 29. USB Controller Priorities 61
Table 30. External Storage 62
Table 31. AMF Single Pack Dimensions and Weights 63
Table 32. EMF Single Pack Dimensions and Weights 63
Table 33. PowerEdge R210 Volatility 66
Table 34. Volatility: Data Writing and Purpose 68
Table 35. Methodology for Data Input to Memory 69
Table 36. Methodology for Memory Protection and Clearing 71

Figures

Figure 1. Server Dimensions 17
Figure 2. Front Panel View 17
Figure 3. Back Panel View 18
Figure 4. Power Button LED 18
Figure 5. Side View 19
Figure 6. Internal Chassis View 20
Figure 7. R210 Static Rails 21
Figure 8. R210 Mounted In Four-Post Square-Hole Rack 21
Figure 9. System Fans 22
Figure 10. Intrusion Switch 23
Figure 11. Internal USB Ports 24
Figure 12. Battery on Motherboard 25
Figure 13. PCIe x16 Riser Card 43
Figure 14. SAS 6/iR Adapter Card Installed 44
Figure 15. Rack Adjustability Range 52
Figure 16. Packaging 64

1 Product Comparison

Dell aims to add value to your business by including the features you need without a lot of the unnecessary extras. Our goal is to deliver value through tailored solutions based on industry standards, as well as purposeful, innovative design of our servers.

The Dell™ PowerEdge™ R210 was developed with a purposeful design, energy-optimized technology, simplified systems management, and the flexibility that make it a great first rack server for the small business or as a specialized application server or edge server for larger corporations. Dell's entry 1-socket 1U rack server, the PowerEdge R210, offers value, the performance of Intel® Xeon® 3400 series processors, DDR3 memory, eSATA external storage expandability, and enterprise-class manageability in an ultra-compact chassis.

Purposeful Design: The PowerEdge R210 follows the 11th generation PowerEdge portfolio specifications and features the same system design commonality and reliability true to the entire portfolio. All 11th generation PowerEdge servers are built to make the user experience easier. We put all external ports, power supplies, and LED lights in the same location for familiar experience as well as easy installation and deployment.

Robust, metal hard drive carriers and organized cabling are designed to help improve component access and airflow across the server. The PowerEdge R210's design also provides a LED display positioned on the front of the server for ease of monitoring and troubleshooting condition of the server. It was designed to meet the needs of many IT environments with a short 15.5 inch chassis to allow for flexible deployment almost anywhere, including space-constrained environments.

Energy Efficiency: The PowerEdge R210 incorporates Energy Smart design using a low 250 watt power supply, low-flow fans and logical component layout of the internal components which aids with airflow direction, helping to keep the server cool and reduce noise as much as possible. The result is a server with the smallest power footprint within the 11th generation PowerEdge server portfolio.

Simplified System Management: With the optional advanced embedded systems management capabilities of Lifecycle Controller, Dell brings comprehensive enterprise class manageability into the 1-socket space. Lifecycle Controller is delivered as part of the optional iDRAC Express or iDRAC Enterprise in the PowerEdge R210. The Lifecycle Controller helps to simplify administrator tasks by performing a comprehensive set of provisioning functions such as system deployment, system updates, hardware configuration and diagnostics from a single intuitive interface called Unified Server Configurator (USC) in a pre-OS environment. This helps eliminate the need to use and maintain multiple pieces of disparate CD/DVD media.

Also part of the Dell OpenManage™ portfolio is the Dell Management Console which is included with every Dell server and provides IT administrators with a consolidated console view of their IT infrastructure.

Built with cost-effective RAID options to further protect your valuable data, new eSATA external storage connectivity options, and the latest Intel® Xeon® processor technology, the PowerEdge R210 is an ideal entry 1 socket 1U rack for small businesses and larger offices needing flexibility and manageability in a very small chassis.

Table 1. Comparison of PowerEdge Server Features

Feature	R210	R200 (Predecessors)	R310 (Next level up)
Processor	Quad-core Intel® Xeon® processor 3400 series Dual-core Intel® Celeron® G1101 Dual-core Intel® Pentium® G6950 Dual-core Intel® Core i3 530 Dual-core Intel® Core i3 540 processors	Single Quad-Core Intel® Xeon® 3300 series Single Dual-Core Intel® Xeon® E3100 series Single Quad-Core Intel® Xeon® 3200 series Single Dual-Core Intel® Xeon® 3000 series Single Intel® Core™ 2 Duo® E4000 series Single Intel® Core™ 2 Duo® E7000 series Single Intel® Pentium® Dual-Core E2000 series Single Intel® Celeron® E1000 and 400 series	Quad-core Intel® Xeon® processor 3400 series Dual-core Intel® Celeron® G1101 Dual-core Intel® Pentium® G6950 Dual-core Intel® Core i3 530 Dual-core Intel® Core i3 540 processors
Front Side Bus	DMI	1333MHz	DMI @2.5 Gb/s
# Processors	1	1	1
# Cores	Dual or Quad	Dual or Quad	Dual or Quad
L2/L3 Cache	4MB or 8MB	512K~6M	Intel® Xeon®: 8M DT proc: 4, 3 or 2M
Chipset	Intel® 3420 chipset	Intel® 3210 chipset+ICH9R	Intel® 3420 chipset
DIMMs	4 DDR3 Unbuffered w/ECC 1333/1066 MHz	4 DDR2 Unbuffered w/ECC 800/ 667MHz	6 DDR3 Unbuffered w/ECC or Registered w/ECC 1333/1066MHz
Min/Max RAM	1GB/16GB	512MB/8GB	1GB/32GB
HD Bays	2 x 3.5" or 2 x 2.5"	2 x 3.5"	4 x 3.5" Optional Hot-Swap Support 2.5" HDDs via Hot-Swap tray
HD Types	Default SATA. Optional SAS and SSD via add-in controller	Default SATA. Optional SAS via add-in controller	Default SATA. Optional SAS and SSD via add-in controller
Ext Drive Bay(s)	1 for slim ODD	1 for slim ODD	1 for slim ODD

Feature	R210	R200 (Predecessors)	R310 (Next level up)
Embedded HD Controller	Chipset based SATA	Chipset based SATA	Chipset based SATA
Optional Storage Controller	NON-RAID: SAS 5/E LSI 2032 (For TBU only) RAID: SAS 6/iR Adapter PERC S100 PERC S300 PERC H200 PERC 6/E PERC H800	NON-RAID: SAS 5/E LSI 2032 (For TBU only) RAID: SAS 6/iR Adapter PERC 6/E	NON-RAID: SAS HBA LSI 2032 (For TBU only), PERC H800 RAID: SAS 6/iR Modular PERC H200 (6Gb/s) PERC H700 (6Gb/s) with 512MB PERC H700 (6Gb/s) NV DRAM with 512MB or 1G PERC S100 (software based) PERC S300 Modular (software based)
Availability	ECC Memory, ADD-in RAID, TPM/CTPM	ECC memory, Add-in RAID, toolless chassis	Hot-swap HDD; Redundant PSU; Quad-pack LED diagnostic/LCD with Hot-swap HDD chassis ;ECC Memory
Server Mgt.	BMC, IPMI 2.0 compliant; Full Dell™ OpenManage™ suite Optional; iDRAC6 Express, iDRAC6 Enterprise, vFlash	DRAC4 Full Dell™ OpenManage™ suite	BMC, IPMI 2.0 compliant; Full Dell™ OpenManage™ suite Optional; iDRAC6 Express, iDRAC6 Enterprise, vFlash
I/O Slots	1 x PCIe x16 (True x16, Gen2); full height, half length Support x16 bandwidth card under 25W	Riser 1: One PCIex 8, one PCIe x4 (w/ x8 connector) Riser 2: One PCI-X 64/133 and one PCIe x8	Riser 1: PCIe x16 (x8 routing), Full Height/ Half Length, Gen 2 Riser 2: PCIe x8 (x8 routing), Full Height / Half Length, Gen 2 2 PCIe G2 slots: Slot 1: PCIe x16 (x8

Feature	R210	R200 (Predecessors)	R310 (Next level up)
RAID	See Optional Storage Controller row above	See Optional Storage Controller row above	See Optional Storage Controller row above
NIC/LOM	2x GbE LOM w/o TOE Optional: various NIC available	2x GbE LOM Optional: various NIC available	2x GbE LOM Optional: various NIC available
USB	2 front/2 rear/2 internal	2 front/2 rear	2 front/2 rear/2 internal
Power Supplies	Non-redundant, 250W (80+ Bronze) Auto Ranging (100V~240V)	Non-redundant, 345W	Non-redundant, 350W (80+ Bronze) Optional redundant, 400W (80+ Silver) Auto Ranging (100V~240V)
Fans	Non-redundant, non-hot swappable	Non-redundant, non-hot swappable	Non-redundant, non-hot swappable
Form Factor	1U rack	1U rack	1U rack
Dimensions (HxWxD)	42.6 x 431 x 393.7 (mm) (w/o ear and bezel) 1.67" x 17.1" x 15.5"	42.67 x 447.0 x 546.1 (mm) (w/o ear and bezel) 1.68" x 17.6" x 21.5"	42.4 x 434.0 x 610 (mm) (w/o bezel) 1.67" x 17.10" x 24.00"
Weight	Max. 17.76 lbs (8.058 Kg)	Max. 28.7 lbs (13.01 Kg)	Max. 33.02 lbs (15 Kg)

2 New Technologies

2.1 Overview

A number of new technologies are used in the PowerEdge R210, including:

- iDRAC6 (new Dell server remote management controller)
- Software RAID PERC S100 and PERC S300
- E-SATA connector

2.2 Detailed Information

2.2.1 System Management

The PowerEdge R210 supports iDRAC6 Express and Enterprise for advanced manageability. For more information on iDRAC 6 options, please see Section 16, Systems Management.

2.2.2 Software RAID

Dell PowerEdge RAID controller portfolio now offers Enterprise Software RAID in the PERC S100 and PERC S300 options. PERC S100 and S300 are supported in PowerEdge 11th generation value-based servers.

Software RAID code uses the CPU of the computer system to execute the RAID tasks including leveraging the CPUs (calculating power as well as sharing memory), internal bus resources, operating system, and all associated applications. Software-based RAID uses drives which are attached to the computer system via a built-in I/O interface or a processor-less host bus adapter (HBA). The RAID function becomes active as soon as the operating system has loaded the RAID driver software.

Previous generations of PERC controllers have been based on Hardware RAID technology, the PERC S100 and PERC S300 are based on Software RAID technology. The software based RAID options provide a cost effective entry-level RAID. Both the PERCS100 and S300 versions offer similar RAID level support, including RAID 0, 1, 5, 10.

In the case of the PERC S100, it offers a minimal RAID option where the I/O Controller Hub (ICH) chipset of the motherboard enables a SATA RAID option. There is no new hardware involved. The PERC S100 controller solution supports up to 4 cabled SATA Hard Disk Drives (HDD) or Solid State Disk (SSD) drives and is ideal for SMB usage scenarios.

For the PERC S300, the hardware component of the controller is based on the Dell SAS HBA (leveraging SAS 6/iR) and allows for both SAS and SATA connectivity. PERC S300 controller solution supports up to 8 cabled or hot plug SAS/SATA Hard Disk Drives (HDDs).

Table 2. Comparison Overview PERC S100 and S300

Feature/Spec	S100	S300
Interface	3Gb SATA (SATA II)	3Gb SAS/SATA (SAS 1.1)
I/O Controller	Intel® ICH10R	Dell 3Gb/s SAS Adapter (2 internal connectors with x4 SAS ports)
System Communication	Integrated	PCIe Lanes
Cache Memory	N/A	N/A
Battery-backed cache	No	No
Max Number of Physical Drives	4	8
HDD Support	SATA (Cabled)	SAS & SATA (Cabled or hot plug)
SSD Support	SATA (Cabled)	Not Supported
SED Support	Not Supported	Not Supported
RAID Levels	0, 1, 5, 10	0, 1, 5, 10
Non-RAID Volumes	Yes	Yes
Max Number of Virtual Disks per Controller	8	8
Global Hotspare Support	Yes	Yes
Operating System Support (Windows Server Only)	Microsoft® Windows Server® 2003 R2 SP2, 32/64-bit, Standard & Enterprise Editions* Microsoft® Windows Server® 2003 R2 SP2 32-bit Web Edition Microsoft® Windows Server® 2008 SP2, 32/64-bit, Standard & Enterprise Editions Microsoft® Windows Server® 2008 R2, 64-bit, Web, Standard, and Enterprise Editions	Microsoft® Windows Server® 2003 R2 SP2, 32/64-bit, Standard & Enterprise Editions* Microsoft® Windows Server® 2003 R2 SP2 32-bit Web Edition Microsoft® Windows Server® 2008 SP2, 32/64-bit, Standard & Enterprise Editions Microsoft® Windows Server® 2008 R2, 64-bit, Web, Standard, and Enterprise Editions
Virtualization Support	Not Supported	Not Supported
Storage Management	OpenManage™ 6.2 or later	OpenManage 6.2™ or later

Note: Microsoft Windows Server 2003 R2 is supported with Service Pack 2. For the most

up-to-date information, see the Operating System Support Matrix for Dell PowerEdge Systems on Dell.com.

2.2.3 eSATA

External Serial Advanced Technology Attachment (eSATA) serves as an external interface for SATA technologies. For customers who want fast (up to 1.5Gbit/s), easy-to-use external storage that has advanced features such as S.M.A.R.T. (Self-Monitoring, Analysis, and Reporting Technology) protection, eSATA may be a good choice.

eSATA devices are not bootable when BIOS is set to RAID mode and are not supported as a part of Virtual Disks when in RAID mode for S100.

To operate eSATA devices in the Red Hat® Enterprise Linux® 4.8 environment, the BIOS mode must be manually switched from default (AHCI mode) to ATA mode.

Table 3. eSATA Modes

Mode	Bootable	Hot-Pluggable	Restrictions
ATA mode	Yes	No	
AHCI mode	Yes	Yes	RHEL 4.8 is not supported.
RAID mode (S100 enabled)	No	No	Linux and Virtualization OS are not supported

3 System Overview

Table 4. Product Feature Summary

Feature	Product Description
Form Factor	Rack
Processors	Quad-core Intel® Xeon® 3400 series processors Dual-core Intel® Celeron® G1101 Dual-core Intel® Pentium® G6950 Dual-core Intel® Core™ i3 530 Dual-core Intel® Core™ i3 540 processors
Processor Sockets	1
Front Side Bus or HyperTransport	DMI (Direct Media Interface)
Cache	8MB
Chipset	Intel® 3420 chipset
Memory	Up to 16GB (4 U-DIMMs): 1GB/2GB/4GB DDR3 1066MHz or 1333MHz
I/O Slots	1 PCIe x16 G2 slot
RAID Controllers	Internal Controllers: SAS 6/iR PERC S100 (software-based) PERC S300 (software-based) PERC H200 External Controllers: PERC 6/E with 256MB or 512MB of battery-backed cache SAS 5/E PERC H800 LSI2032 PCIe SCSI HBA
Drive Bays	Cabled options available: Up to two 2.5"/ 3.5" SAS, SATA or SSD drives
Maximum Internal Storage	4TB
Hard Drives	3.5 inch SATA (7.2K rpm): 160GB, 250GB, 500GB, 1TB, 2TB 3.5 inch Near-line SAS (7.2 rpm): 1TB, 2TB 3.5 inch SAS (10K rpm): 600GB 3.5 inch SAS (15K rpm): 146GB, 300GB, 450GB, 600GB 2.5 inch SAS (10K rpm): 146GB, 300GB
Network Interface Cards	1 Broadcom® NetXtreme™ 5709 with Dual Port Gigabit Ethernet NIC, Copper, w/TOE PCIe x4 Broadcom® NetXtreme™ 5709 Dual Port Gigabit Ethernet NIC, Copper, TOE/ISCI PCIe x4

Feature	Product Description
	Intel® PRO/ 1000PT Single Port Adapter, Gigabit Ethernet NIC, PCIe x1 Intel® Gigabit ET Dual Port Adapter, Gigabit Ethernet NIC, PCIe x4 Intel® Gigabit ET Quad Port Adapter, Gigabit Ethernet NIC, PCIe x4
Power Supply	Single-cabled power supply (250W)
Availability	Quad-pack LED diagnostics, ECC Memory, add-in RAID, TPM/C-TPM
Video	Matrox® G200eW w/ 8MB memory
Remote Management	iDRAC6 optional
Systems Management	BMC, IPMI 2.0 compliant Dell™ OpenManage™ featuring Dell Management Console Unified Server Configurator Lifecycle Controller enabled via optional: iDRAC6 Express, iDRAC6 Enterprise and vFlash
Rack Support	Support for Static ReadyRails™ 4-post and 2-post racks
Operating Systems	**Microsoft® Factory Installed OS Options:** Microsoft® Windows® Small Business Server 2008, 64-bit Standard and Premium Edition Microsoft® Windows Server® 2003 R2 with SP2 32-bit Standard and Enterprise Edition Microsoft® Windows Server® 2003 R2 with SP2 64-bit, Standard and Enterprise Editions Microsoft® Windows Server® 2008 32-bit, Web, Standard and Enterprise Edition Microsoft® Windows Server® 2008 64-bit, Web, Standard and Enterprise Editions Microsoft® Windows Server® 2008 SP2 32-bit, Web, Standard and Enterprise Edition Microsoft® Windows Server® 2008 SP2 64-bit, Web, Standard and Enterprise Edition Microsoft® Windows Server® 2008 R2 64-bit Web, Standard and Enterprise Edition Microsoft® Windows Server® 2008 Foundation Microsoft® Windows Server® 2008 Foundation R2 **Microsoft® Non- Factory Installed OS Option:** Microsoft® Windows® Essential Business Server 2008 64-bit Standard and Premium Edition **Factory Installed Linux OS Options:** Novell® SUSE® Linux® Enterprise Server 11 Red Hat® Enterprise Linux® 5.3 **Virtualization OS Option:** Microsoft® Windows Server® 2008, with Hyper-V™

4 Mechanical

4.1 Chassis Description

The PowerEdge R210 is a 1-socket 1U server. The configuration details are as follows:

- **HDD Type :** 2x 3.5" Cabled HDD or 2 x 2.5" cabled HDD
- **PSU Type:** Single Non-Redundant PSU
- **Diagnostic:** LED

4.2 Dimensions and Weight

Table 5. Overall Dimensions and Weight

Dimensions *(HxWxD)* (w/o ear and bezel)	1.68" x 17" x 15.5" (42.6 x 431 x 393.7 mm)
Max Weight	17.76 lbs (8.058kg)

Measurements in Table 6 correspond to the diagram shown in Figure 1 below.

Table 6. Specific Measurements

Xa	Xb	Ya	Yb	Yc	Za with bezel	Za without bezel	Zb*	Zc	L6 Sys Wgt (Kg)
434.0	482.58	42.4	N/A	N/A	31.35	NA	393.7	397.49	5.95

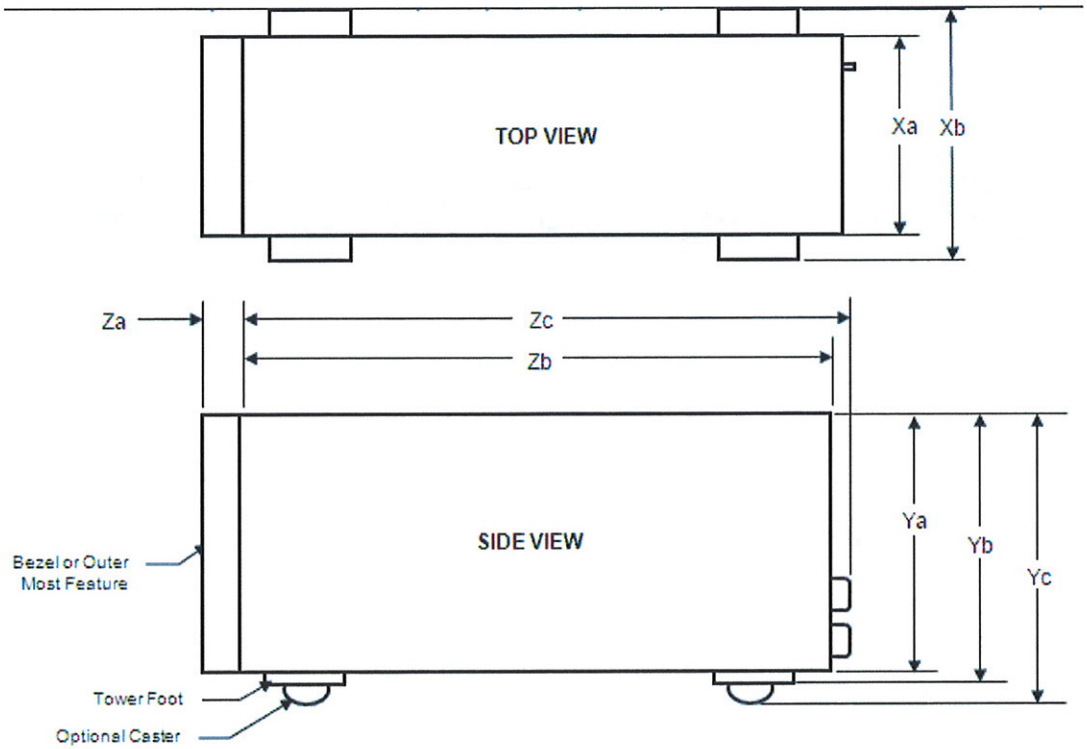

Figure 1. Server Dimensions

* Zb goes to the nominal rear wall external surface where the motherboard I/O connectors reside.

4.3 Front Panel View and Features

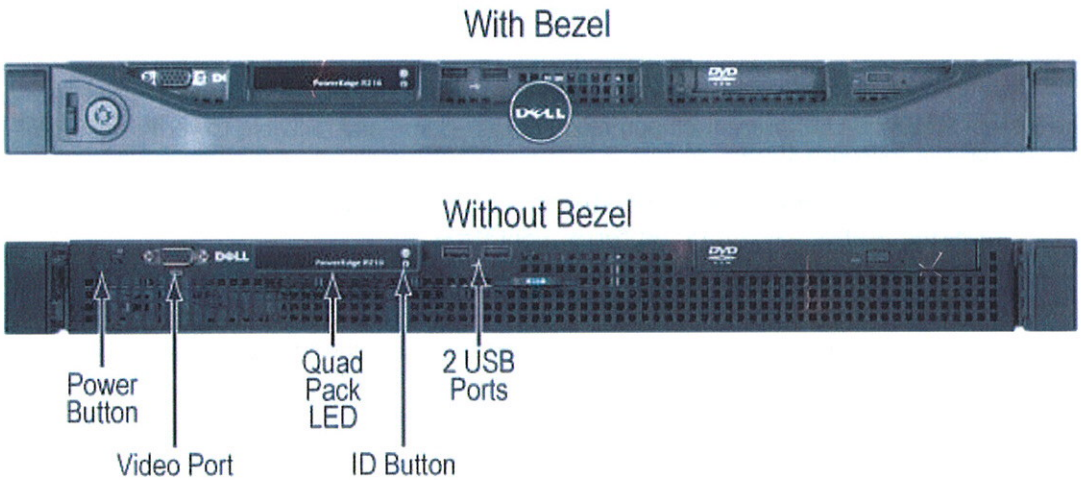

Figure 2. Front Panel View

4.4 Back Panel View and Features

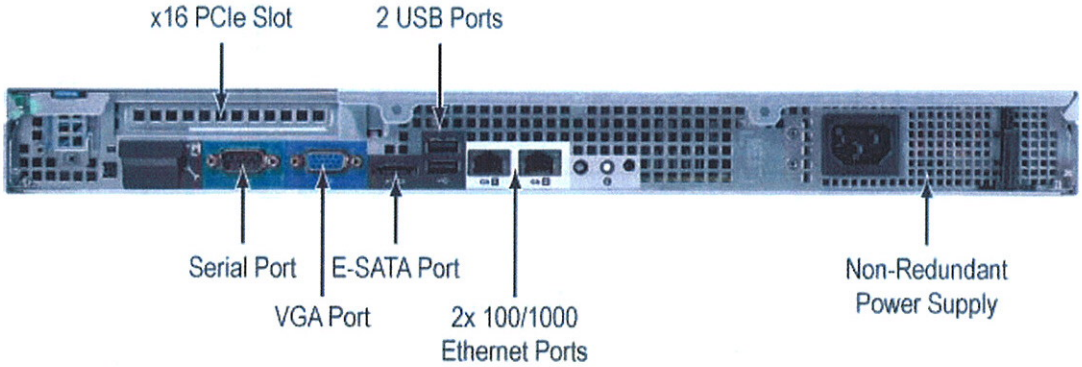

Figure 3. Back Panel View

4.5 Power Supply Indicators

4.5.1 Power Button LED

The Power button controls the system's power, turning the unit on and off.

All PowerEdge servers have the Power LED light-pipe integrated in the Power button. The color of the power LED is green. The lighting pattern must be in the form of a standard Power icon.

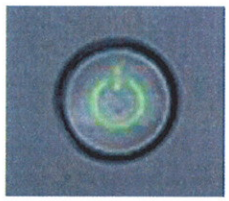

Figure 4. Power Button LED

4.5.2 System Status/ID LED

The System Status/ID LED, present on non-modular rack-dense and rackable tower PowerEdge servers, has the following states:

- **No light**—System is in the off state (S5, or mechanical (no AC power)
- **Blinking Amber**—System fault/error condition.
- **Steady Blue**—Normal operating state (S0)
- **Blinking Blue**—System ID engaged

This LED remains powered during non-operational (standby, shutdown) modes to enable system identification.

4.6 NIC Indicators

See the Hardware Owner's Manual for information.

4.7 Side View

Figure 5. Side View

4.8 Internal Chassis View

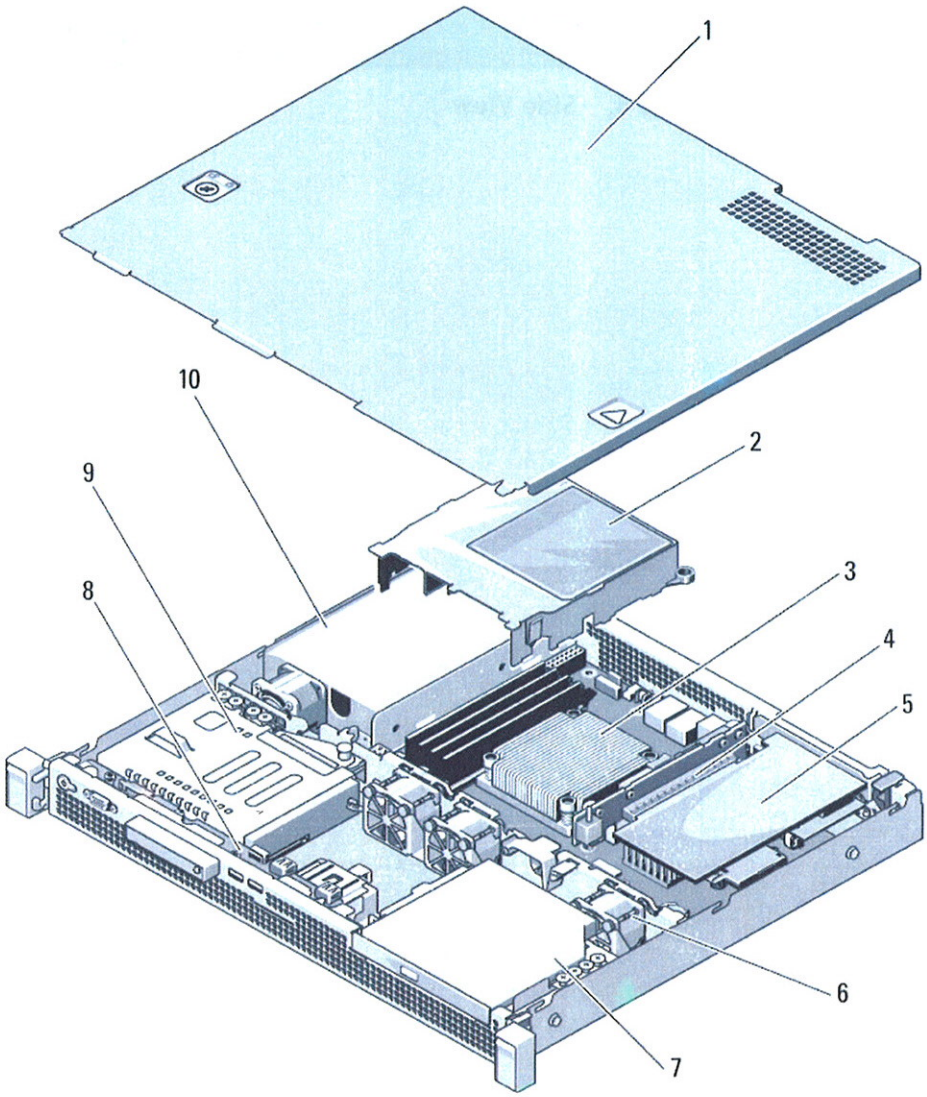

1	system cover	2	system board shroud
3	heat sink/processor	4	expansion-card riser
5	expansion card	6	system cooling fans (3)
7	optical drive	8	control panel board
9	hard drive 0	10	power supply bay

Figure 6. Internal Chassis View

4.9 Rails

ReadyRails™ static rails for tool-less mounting in 4-post racks with square or unthreaded round holes or tooled mounting in 4-post threaded and 2-post racks

The R210 rails must first be attached to the sides of the system and then inserted into the cabinet members installed in the rack. For additional information regarding rail options for the R210, see Section 13.

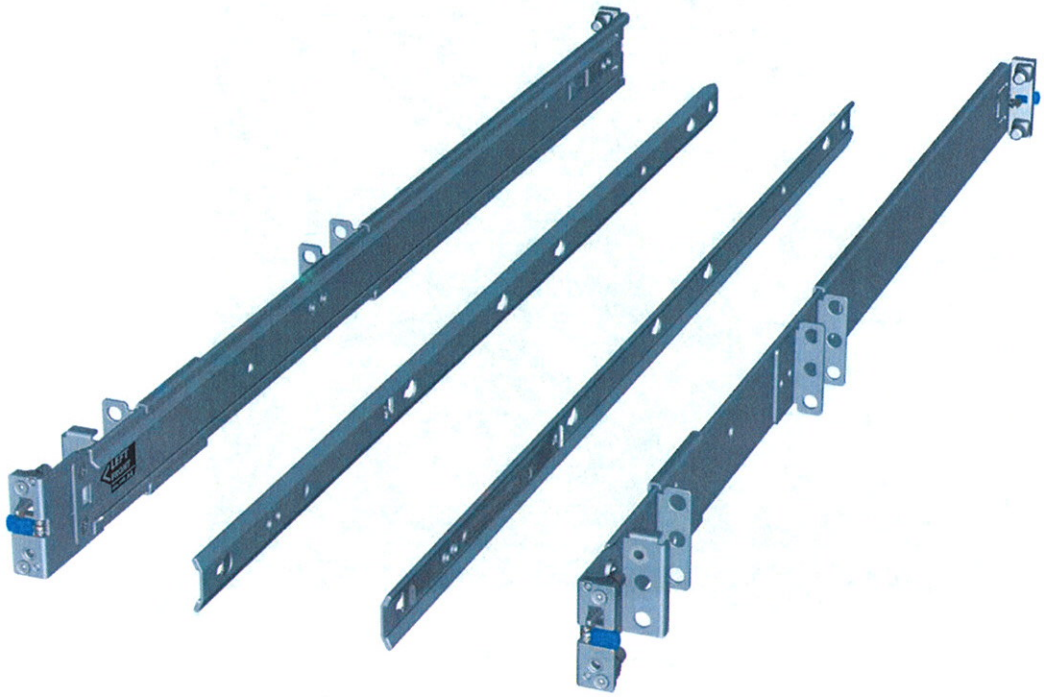

Figure 7. R210 Static Rails

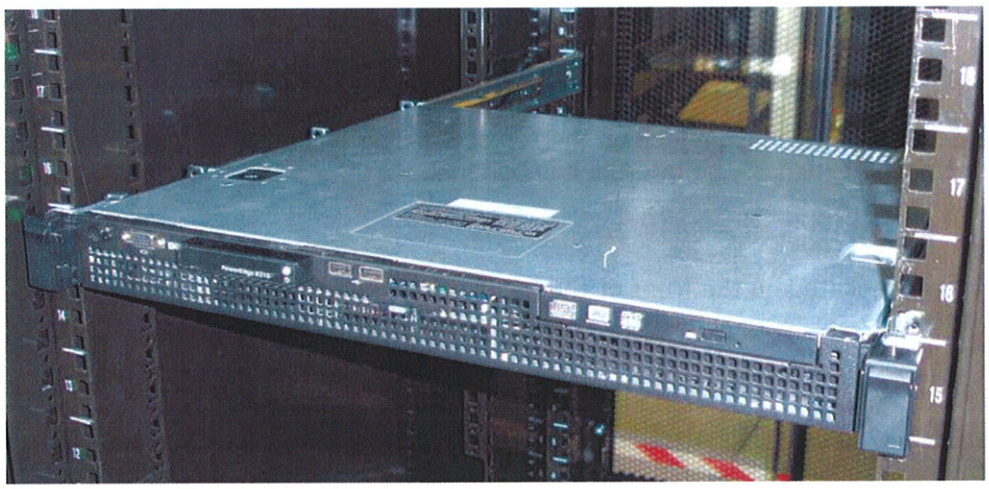

Figure 8. R210 Mounted In Four-Post Square-Hole Rack

4.10 Fans

There are three system fans located in the middle of the system.

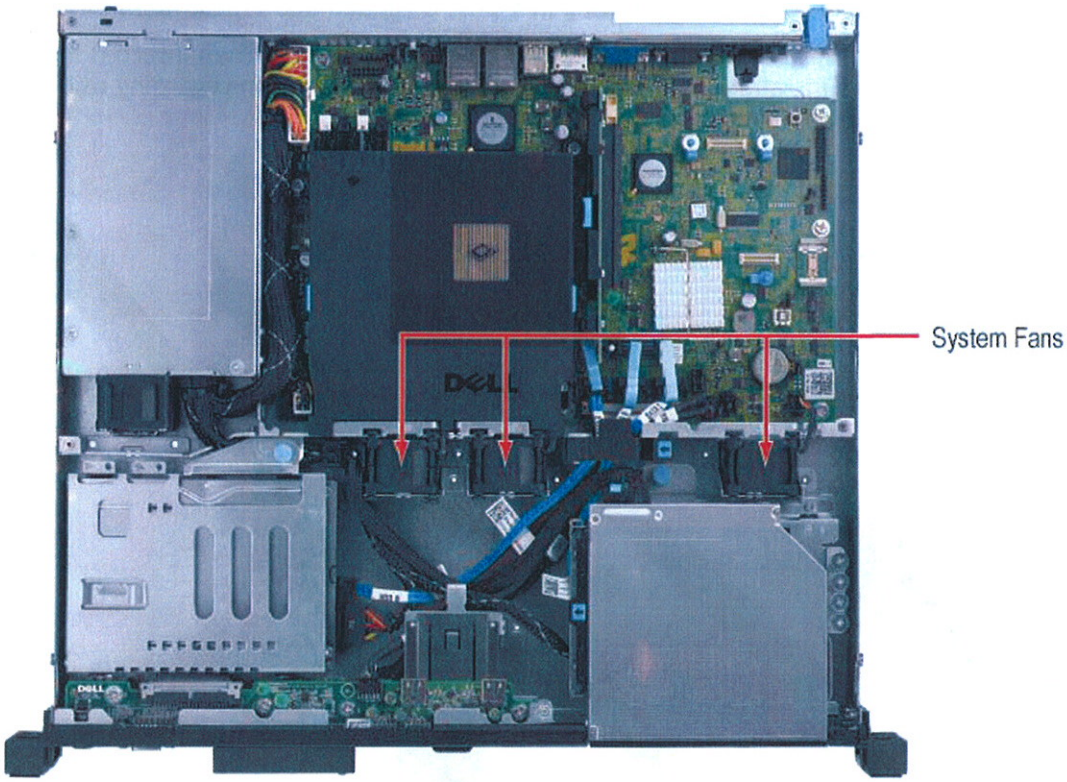

Figure 9. System Fans

4.11 Control Panel LED

See the Hardware Owner's Manual for information.

4.12 Security

4.12.1 Top Cover Lock Mechanism

The PowerEdge R210 uses a coin lock on the top cover. This lock must be unlocked and the cover removed to access the internal components.

4.12.2 Bezel

The bezel lock is located on the front of the bezel and provides security for the system by preventing access to optical disk drives and the Power button.

4.12.3 Trusted Platform Module (TPM)

The PowerEdge R210 uses a TPM 1.2 compliant encryption chip solution on the system board with BIOS support worldwide, except for China where Trusted Computing Module (TCM) is the standard. TPM is disabled by default.

Table 7. TPM Pin Signals

Pin	SIGNAL	Pin	SIGNAL
1	TPM_PRES_N	20	I2C_TPM_SCL
2	LPC_LAD0	19	P3V3
3	GND	18	I2C_TPM_SDA
4	LPC_LAD1	17	LPC_LAD3
5	SEEPROM I2C Address E0	16	GND
6	P3V3_AUX	15	SERIRQ
7	RST_TPM_R_N	14	P3V3
8	LPC_LFRAME_N	13	LPC_LAD2
9	GND	12	GND
10	TPM 33MHz Clock	11	TPM 14MHz Clock

4.12.4 Power Switch Security

The LED control panel is designed so the power switch cannot be accidentally turned on or off. In addition, in BIOS there is an optional setting in the CMOS setup to disable the power switch.

4.12.5 Intrusion Alert

The intrusion switch snaps into the chassis located under the side cover. The intrusion switch detects and alerts the user that the side cover is open.

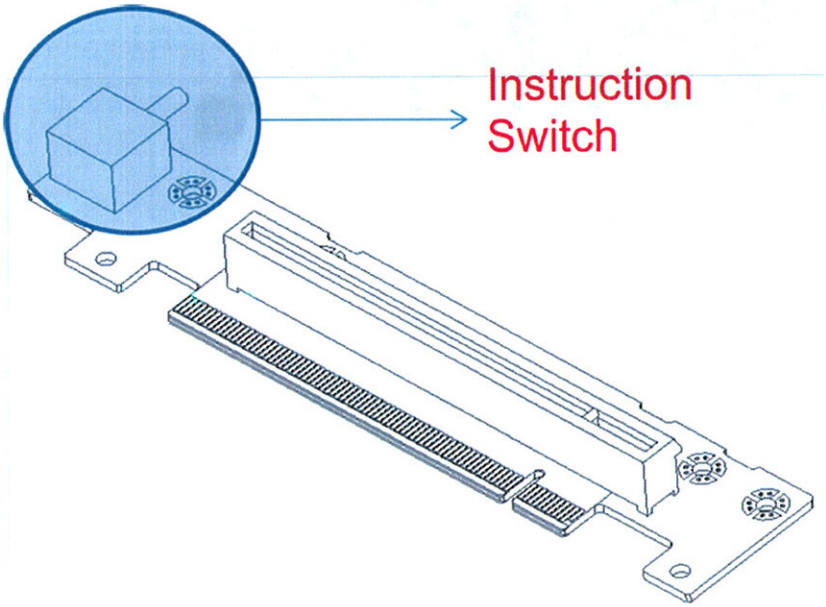

Figure 10. Intrusion Switch

4.12.6 Secure Mode

BIOS has the ability to enter a secure boot mode via setup. This mode includes the option to lock out the power and NMI switches on the control panel or set up a system password. See the BIOS specification in the Hardware Owner's Manual for information.

4.13 USB Ports

The PowerEdge R210 has two internal USB ports.

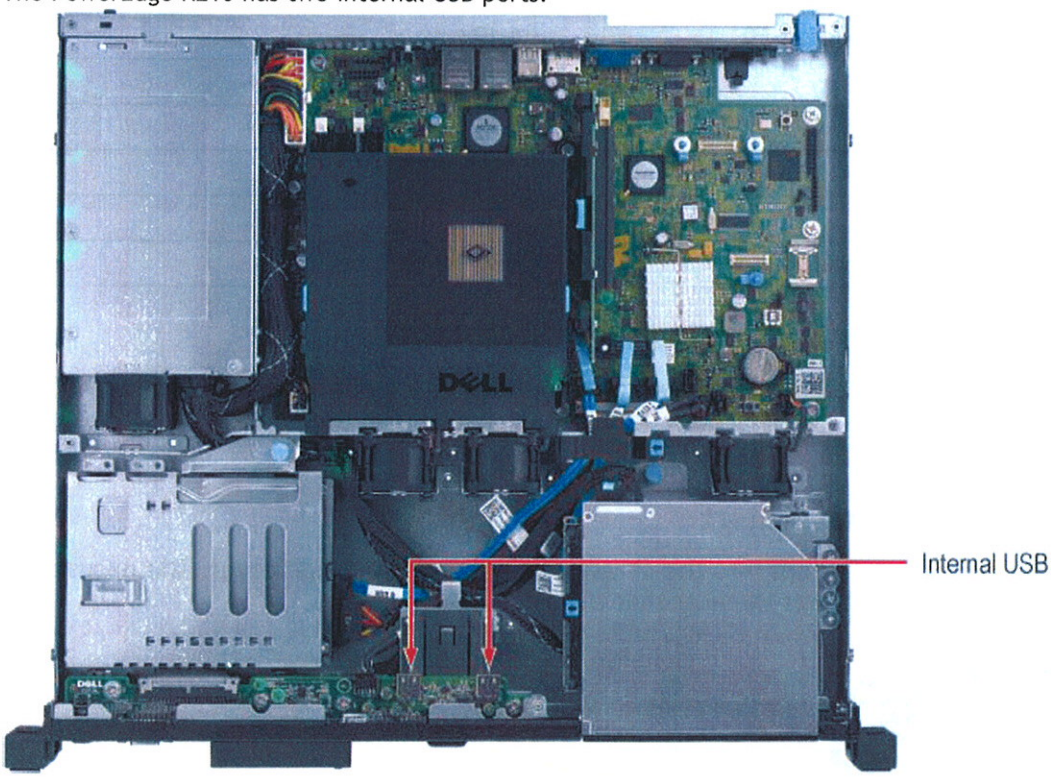

Figure 11. Internal USB Ports

4.14 Battery

A replaceable lithium battery (CR2032) is mounted on the motherboard to provide backup power for the real-time clock and CMOS RAM in the Platform Controller Hub (PCH).

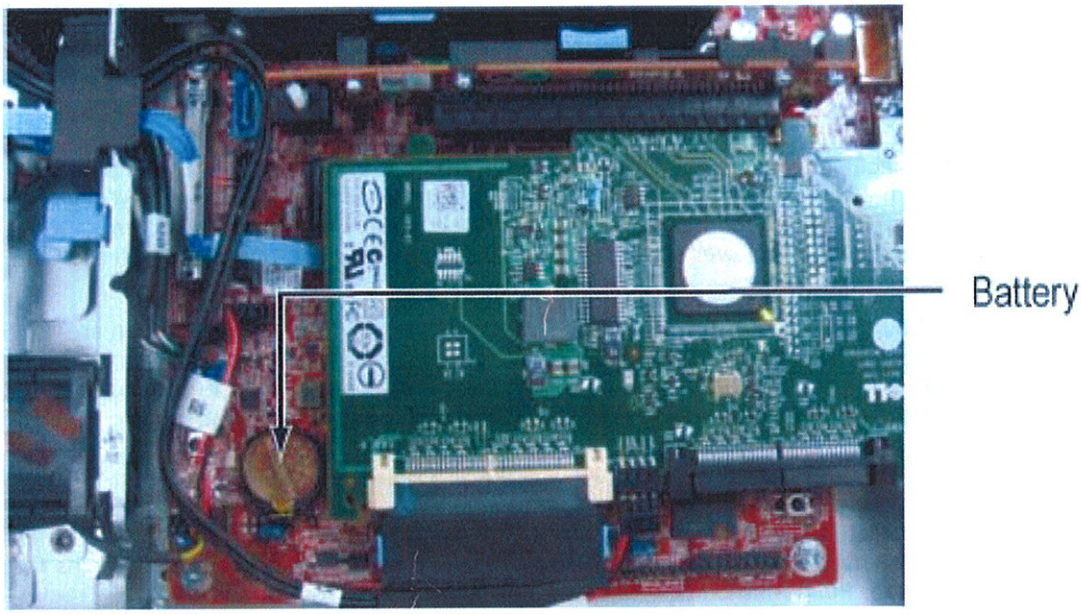

Figure 12. Battery on Motherboard

4.15 Field Replaceable Units (FRU)

The planar contains a 16K x 8 serial EEPROM to store FRU information including Dell part number, part revision level, and serial number. This information is used by the SEL (system event log) and the BMC (baseboard management controller).

Parts available for field replacement include:

- CMOS battery
- Expansion card
- Front bezel
- HDD
- I/O panel
- Memory
- ODD
- Power supply
- Processor
- Processor shroud
- System board
- System fan

4.16 User Accessible Jumpers, Sockets, and Connectors

See the Hardware Owner's Manual.

5 Power, Thermal, Acoustic

5.1 Power Supplies

The base system includes a single 250W power supply. This unit provides power to the planar and the two internal hard drive bays. Power will be "soft-switched" allowing power cycling using a switch on the front of the system enclosure or through software control (server management functions). The power system is compatible with industry standards, such as ACPI and Server 2000.

Standard VRD (Voltage Regulator Down) modules that conform to VRD11.1 specification are used. This reduces the board layout complexity while offering design modularity. As processor speeds increase, a newer VRD can be used to accommodate the power increase with no need to re-spin the board. The VRD is integrated onto the planar and is not field upgradeable.

5.2 Power Supply Connectors on the Planar

There are 2 separate power supply connectors on the planar. One connector is an ATX connector (2x12) and the other one is a 2x2 connector to provide an additional two pins for +12V. The connector Pin definition (2 x 12 power connector) is not ATX standard.

The 2x12 connector provides 3.3V, 5V, 12V, and 12V standby to the system. (3.3V standby to system is generated from 12V standby).

Table 8. Power Supply 24 Pins and Signals

Pin	SIGNAL	Pin	SIGNAL
1	P3V3	13	P3V3
2	P3V3	14	P12V1
3	GND	15	GND
4	P5V	16	PS_ON_N
5	GND	17	GND
6	P5V	18	GND
7	GND	19	GND
8	PS_PWROK	20	P12V1
9	P12V_STBY	21	P5V
10	P12V1	22	P5V
11	P12V1	23	P5V
12	P3V3	24	GND

Table 9. Power Supply 4 Pins and Signals

Pin	SIGNAL	Pin	SIGNAL
1	GND	3	P12V2
2	GND	4	P12V2

5.3 Environmental Specifications

5.3.1 Temperature

Operating: 10° to 35°C (50° to 95°F) with a maximum temperature gradation of 10°C per hour (NOTE: For altitudes above 2950 feet, the maximum operating temperature is de-rated 1°F/550 ft.)

Storage: -40° to 65°C (-40° to 149°F) with a maximum temperature gradation of 20°C per hour

5.3.2 Relative Humidity

Operating: 20% to 80% (non-condensing) with a maximum humidity gradation of 10% per hour

Storage: 5% to 95% (non-condensing)

5.3.3 Maximum Vibration

Operating : 0.26 Grms at 5-350 Hz for 15 min

Storage: 1.54 Grms at 10-250 Hz for 15 min

5.3.4 Maximum Shock

Operating: One shock pulse in the positive z axis (one pulse on each side of the system) of 31 G for 2.6 ms in the operational orientation

Storage: Six consecutively executed shock pulses in the positive and negative x, y, and z axes (one pulse on each side of the system) of 71 G for up to 2 ms

Six consecutively executed shock pulses in the positive and negative x, y, and z axes (one pulse on each side of the system) of 32 G faired square wave pulse with velocity change at 270 inches/second (686 centimeters/second)

5.3.5 Altitude

Operating: 16 to 3048 m (-50 to 10,000 ft) (Note: For altitudes above 2950 feet, the maximum operating temperature is de-rated 1°F/550 ft.)

Storage: 16 to 10,600 m (-50 to 35,000 ft)

5.3.6 Airborne Contaminant Level

Class: G2 or lower as defined by ISA-S71.04-1985

5.4 Power Supply Unit (PSU) Specifications

Table 10. PSU Specifications

Feature	Non Redundant PSU
Dimensions	L-210[1] mm x W-106 mm x H-40.0 mm
Status Indicators	1 x bi-color Light Emitting Diode
Integrated Fans	None
AC Cord Rating	15 Amps @ 120 VAC, 10 Amps @ 240 VAC
Input Voltage	90 - 264 VAC
Auto-ranging	Yes
Line Frequency	47-63 Hertz
Maximum Inrush Current	Under typical line conditions and over the entire system ambient operating range, the inrush current may reach 25 Amps for 10 ms or less.
Hot-Swap Capability	No
Output Power	250W
Maximum Heat Dissipation	1039 BTU per hour maximum
Efficiency 20% to 100% Load	82-85% @115 VAC 82-85% @ 230 VAC

[1] Does not include the power supply handle or ejection tab

5.5 ENERGY STAR® Compliance

See the ENERGY STAR Compliance results on Dell.com.

5.6 Thermal

The thermal design of the PowerEdge R210 reflects the following:

- **Closed loop thermal control algorithm.** Closed loop thermal control method uses feedback temperatures to dynamically determine proper fan speeds.
- **Comprehensive thermal management.** The PowerEdge R210 controls system cooling fan speed based on several different responses from critical components' sensors, such as CPU temperature, DIMM temperature, inlet ambient temperature, and system configurations. The thermal management adjusts proper cooling ability for the system according to what the system really needs.

- **Optimized Ventilation.** R210 chassis has a custom ventilation design for optimized air flow path. Each component and peripheral is ensured sufficient air to cool.
- **Power-to-Cool.** Dell continues to improve the design and cooling efficiency for server products. The power-to-cool ratio of the PowerEdge R210 is improved over that of its predecessor, PowerEdge R200.

5.7 Acoustics

The acoustical design of the PowerEdge R210 reflects the following:

- **Adherence to Dell's high sound quality standards.** Sound quality is different from sound power level and sound pressure level in that it describes how humans respond to annoyances in sound, like whistles, hums, etc. One of the sound quality metrics in the Dell specification is prominence ratio of a tone, as listed in the table below.
- **Noise ramp and descent at bootup.** Fan speeds, hence noise levels, ramp during the boot process in order to add a layer of protection for component cooling in case the system were not to boot properly.
- **Noise levels vs. configurations.** The noise level of PowerEdge R210 is not dependent upon the hardware configuration of the system. The table below shows the noise levels of the PowerEdge R210 with maximum configuration.

Table 11. Acoustical Specifications

Configurations @ 23 ± 2 °C				Operating Mode	L_{WA}-UL (Bels)	L_{pA} (dBA)	PROMINENT TONES
CPU	DIMM	ODD	HDD				
Intel® Xeon® X3450 2.66 GHz	4 x 4GB	1 X DVD+/-RW	4 x 3.5" SAS (450 GB/ 15000 RPM)	Standby	2.8	16	None
				Idle	6.5	49	None
				Stressed Processor	6.5	49	None

Definitions

Standby: AC Power is connected to Power Supply Units but system is not turned on.

Idle: Reference ISO7779 (1999) definition 3.1.7; system is running in its OS but no other specific activity.

Stressed Processor: An operating mode per ISO7779 (1999) definition 3.1.6. The software MemBW4 is activated to stress the processors.

LwA-UL: The upper limit sound power level (LwA) calculated per section 4.4.2 of ISO 9296 (1988) and measured in accordance to ISO 7779 (1999).

LpA: A-Weighted sound pressure level. The system is placed in a rack with its bottom at 75 cm from the floor. The acoustic transducer is at front bystander position, ref ISO7779 (1999) Section 8.6.2.

Prominent tone: Criteria of D.5 and D.8 of ECMA-74 9th ed. (2005) are followed to determine if discrete tones are prominent. The system is placed in a rack with its

bottom at 75 cm from the floor. The acoustic transducer is at front bystander position, ref ISO7779 (1999) Section 8.6.2.

6 Processors

6.1 Overview

The PowerEdge R210 is a 1S, entry-level server based on the Intel FCLGA1156 to support Intel Xeon 3400 series and Core i3 processors.

6.2 Supported Processors

Table 12. Processor Information

Model	Speed	Power	Cache	Cores	Max. Memory
Intel® Xeon® X3430	2.4GHz	95W	8M	4C	1333MHz
Intel® Xeon® X3440	2.53GHz	95W	8M	4C	1333MHz
Intel® Xeon® X3450	2.67GHz	95W	8M	4C	1333MHz
Intel® Xeon® X3460	2.8GHz	95W	8M	4C	1333MHz
Intel® Xeon® X3470	2.93GHz	95W	8M	4C	1333MHz
Intel® Xeon® L3426	1.86GHz	45W	8M	4C	1333MHz
Intel® Core™ i3 540	3.06GHz	73W	4M	2C	1333MHz
Intel® Core™ i3 530	2.93GHz	73W	4M	2C	1333MHz
Intel® Pentium® G6950	2.8GHz	73W	3M	2C	1066MHz
Intel® Celeron® G1101	2.26GHz	73W	2M	2C	1066MHz
Intel® Xeon® L3406	2.26GHz	30W	4M	2C	1066MHz

6.3 Processor Configurations

The PowerEdge R210 is a single socket 1U rack server that operates in single processor mode only. The memory controller is embedded in the processor.

7 Memory

7.1 Overview

Features of the PowerEdge R210 memory include:

- 2 channels per processor
- Support for Unbuffered ECC DDDR3 DIMMs.
- Support for DDR3 speeds of 1066/1333
- 4 DIMM sockets (16GB Maximum capacity)
- Support for Single Rank and Dual Rank DIMMs

7.2 DIMMs Supported

The following DIMMs are supported by the PowerEdge R210:

- 1GB, DDR3 UDIMM, 1066 w/ECC
- 1GB, DDR3 UDIMM, 1333 w/ECC
- 2GB, DDR3 UDIMM, 1066 w/ECC
- 2GB, DDR3 UDIMM, 1333 w/ECC
- 4GB, DDR3 UDIMM, 1066 w/ECC
- 4GB, DDR3 UDIMM, 1333 w/ECC

Table 13. Supported Processor Configurations

System Capacity	System Memory Speed	DIMM Speed	DIMM_TECH	DIMM Capacity	NUM_DIMM	Slot	NUM_Rank	Data Width
1GB	1066	1066	UDIMM	1	1	1	1	X8
1GB	1333	1333	UDIMM	1	1	1	1	X8
2GB	1066	1066	UDIMM	1	2	1,2	1	X8
2GB	1333	1333	UDIMM	1	2	1,2	1	X8
4GB	1066	1066	UDIMM	1	4	1,2,3,4	1	X8
4GB	1066	1066	UDIMM	2	2	1,2	2	X8
4GB	1333	1333	UDIMM	1	4	1,2,3,4	1	X8
4GB	1333	1333	UDIMM	2	2	1,2	2	X8
8GB	1066	1066	UDIMM	2	4	1,2,3,4	2	X8
8GB	1066	1066	UDIMM	4	2	1,2	2	X8
8GB	1333	1333	UDIMM	2	4	1,2,3,4	2	X8
8GB	1333	1333	UDIMM	4	2	1,2	2	X8
16GB	1066	1066	UDIMM	4	4	1,2,3,4	2	X8

System Capacity	System Memory Speed	DIMM Speed	DIMM_TECH	DIMM Capacity	NUM_DIMM	Slot	NUM_Rank	Data Width
16GB	1333	1333	UDIMM	4	4	1,2,3,4	2	X8
2GB	1066	1066	UDIMM	2	1	1	2	X8
2GB	1333	1333	UDIMM	2	1	1	2	X8
4GB	1066	1066	UDIMM	4	1	1	2	X8
4GB	1333	1333	UDIMM	4	1	1	2	X8

7.3 Slots/Risers

The PowerEdge R210 planar provides four 72-bit (240-pin) sockets for DIMM memory modules. These modules are DDR3-800/1066/1333 Unbuffered DDR SDRAM DIMMs. The modules are configured as 72 bits wide to provide for ECC. The memory controller in the CPU performs the ECC. The system supports a minimum of 1GB upgradeable to 16 of RAM, using the following DIMM sizes:

- 1GB, DIMM Module
- 2GB, DIMM Module
- 4GB, DIMM Module

7.4 Speed

The PowerEdge R210 supports 1066/1333MHz DDR3 memory.

7.5 Sparing

Not supported.

7.6 Mirroring

Not supported.

7.7 RAID

Memory RAID is not supported.

8 Chipset

8.1 Overview

The PowerEdge R210 planar incorporates the Intel Ibex Peak as PCH chipset. The Ibex Peak is a highly integrated I/O controller. The high-level features supported by the chipset and implemented on the PowerEdge R210 are detailed in the sections that follow.

8.2 Direct Media Interface

Direct Media Interface (DMI) is the chip-to-chip connection between the processor and Ibex Peak chipset. This high-speed interface integrates advanced priority-based servicing allowing for concurrent traffic and true isochronous transfer capabilities. Base functionality is completely software-transparent, permitting current and legacy software to operate normally.

8.3 PCI Express Interface

The Ibex Peak provides up to 8 PCI Express Root Ports, supporting the PCI Express Base Specification, Revision 2.0. Each Root Port supports 2.5 GB/s bandwidth in each direction (5 GB/s concurrent). PCI Express Root Ports 1-4 can be statically configured as four x1 Ports or ganged together to form one x 4 ports. Ports 5 and 6 can only be used as two x 1 port.

8.4 SATA Interface

The Ibex Peak has two integrated SATA host controllers that support independent DMA operation on up to six ports and supports data transfer rates of up to 3.0 GB/s (300MB/s). The SATA controller contains two modes of operation - a legacy mode using I/O space, and an AHCI mode using memory space. Software that uses legacy mode will not have AHCI capabilities.

The Ibex Peak supports the Serial ATA Specification, Revision 1.0a. The Ibex Peak also supports several optional sections of the Serial ATA II: Extensions to Serial ATA 1.0 Specification, Revision 1.0 (AHCI support is required for some elements).

8.5 AHCI

The Ibex Peak provides hardware support for Advanced Host Controller Interface (AHCI), a new programming interface for SATA host controllers. Platforms supporting AHCI may take advantage of performance features such as no master/slave designation for SATA devices—each device is treated as a master—and hardware-assisted native command queuing. AHCI also provides usability enhancements such as Hot-Plug. AHCI requires appropriate software support (e.g., an AHCI driver) and for some features, hardware support in the SATA device or additional platform hardware.

8.6 PCI Interface

The Ibex Peak PCI interface provides a 33 MHz, Revision 2.3 implementation. The Ibex Peak integrates a PCI arbiter that supports up to four external PCI bus masters in addition to the internal Ibex Peak requests. This allows for combinations of up to four PCI down devices and PCI slots.

8.7 Low Pin Count (LPC) Interface

The Ibex Peak implements an LPC Interface as described in the LPC 1.1 Specification. The Low Pin Count (LPC) bridge function of the Ibex Peak resides in PCI Device 31:Function 0. In addition to the LPC bridge interface function, D31:F0 contains other functional units including DMA, interrupt controllers, timers, power management, system management, GPIO, and RTC.

8.8 Serial Peripheral Interface (SPI)

The Ibex Peak implements an SPI Interface as an alternative interface for the BIOS flash device. An SPI flash device can be used as a replacement for the FWH, and is required to support Gigabit Ethernet, Intel® Active Management Technology and integrated Intel Quiet System Technology. The Ibex Peak supports up to two SPI flash devices with speed up to 20 MHz, 33 MHz utilizing two chip select pins.

8.9 Compatibility Module

The DMA controller incorporates the logic of two 82C37 DMA controllers, with seven independently programmable channels. Channels 0-3 are hardwired to 8-bit, count-by-byte transfers, and channels 5-7 are hardwired to 16-bit, count-by-word transfers. Any two of the seven DMA channels can be programmed to support fast Type-F transfers.

Channel 4 is reserved as a generic bus master request.

The Ibex Peak supports LPC DMA, which is similar to ISA DMA, through the Ibex Peak's DMA controller. LPC DMA is handled through the use of the LDRQ# lines from peripherals and special encoding on LAD[3:0] from the host. Single, Demand, Verify, and Increment modes are supported on the LPC interface.

The timer/counter block contains three counters that are equivalent in function to those found in one 82C54 programmable interval timer. These three counters are combined to provide the system timer function, and speaker tone. The 14.31818 MHz oscillator input provides the clock source for these three counters.

The Ibex Peak provides an ISA-Compatible Programmable Interrupt Controller (PIC) that incorporates the functionality of two, 82C59 interrupt controllers. The two interrupt controllers are cascaded so that 14 external and two internal interrupts are possible. In addition, the Ibex Peak supports a serial interrupt scheme.

All of the registers in these modules can be read and restored. This is required to save and restore system state after power has been removed and restored to the platform.

8.10 Advanced Programmable Interrupt Controller (APIC)

In addition to the standard ISA compatible Programmable Interrupt controller (PIC) described in the previous section, the Ibex Peak incorporates the Advanced Programmable Interrupt Controller (APIC).

8.11 USB Interface

The Ibex Peak contains up to two Enhanced Host Controller Interface (EHCI) host controllers that support USB high-speed signaling. High-speed USB 2.0 allows data transfers up to 480 Mb/s which is 40 times faster than full-speed USB. The Ibex Peak also contains up to seven Universal Host Controller Interface (UHCI) controllers that support USB full-speed and low-speed signaling.

The Ibex Peak supports up to fourteen USB 2.0 ports. All fourteen ports are high-speed, full-speed, and low-speed capable. Ibex Peak's port-routing logic determines whether a USB port is controlled by one of the UHCI or EHCI controllers.

8.12 Real-Time Clock (RTC)

The Ibex Peak contains a real-time clock with 256 bytes of battery-backed RAM.

The real-time clock performs two key functions: keeping track of the time of day and storing system data, even when the system is powered down. The RTC operates on a 32.768 KHz crystal and a 3 V battery.

The RTC also supports two lockable memory ranges. By setting bits in the configuration space, two 8-byte ranges can be locked to read and write accesses. This prevents unauthorized reading of passwords or other system security information.

The RTC also supports a date alarm that allows for scheduling a wake up event up to 30 days in advance, rather than just 24 hours in advance.

8.13 GPIO

Various general purpose inputs and outputs are provided for custom system design. The number of inputs and outputs varies depending on Ibex Peak configuration.

8.14 Enhanced Power Management

The Ibex Peak's power management functions include enhanced clock control and various low-power (suspend) states (e.g., Suspend-to-RAM and Suspend-to-Disk). A hardware-based thermal management circuit permits software-independent entrance to low-power states. The Ibex Peak contains full support for the Advanced Configuration and Power Interface (ACPI) Specification, Revision 3.0a.

8.15 System Management Features

In addition to Intel AMT, the Ibex Peak integrates several functions designed to manage the system and lower the total cost of ownership (TCO) of the system. These system management functions are designed to report errors, diagnose the system, and recover from system lockups without the aid of an external microcontroller.

8.15.1 TCO Timer

The Ibex Peak's integrated programmable TCO (Total Cost of Ownership) timer is used to detect system locks. The first expiration of the timer generates an SMI# that the system can use to recover from a software lock. The second expiration of the timer causes a system reset to recover from a hardware lock.

8.15.2 Processor Present Indicator

The Ibex Peak looks for the processor to fetch the first instruction after reset. If the processor does not fetch the first instruction, the Ibex Peak will reboot the system.

8.15.3 Error Code Correction (ECC) Reporting

When detecting an ECC error, the host controller has the ability to send one of several messages to the Ibex Peak. The host controller can instruct the Ibex Peak to generate an SMI#, NMI, SERR#, or TCO interrupt.

8.15.4 Function Disable

The Ibex Peak provides the ability to disable the following integrated functions: LAN, USB, LPC, Intel HD Audio, SATA, PCI Express or SMBus. Once disabled, these functions no longer decode I/O, memory, or PCI configuration space. Also, no interrupts or power management events are generated from the disabled functions.

Intruder Detect. The Ibex Peak provides an input signal (INTRUDER#) that can be attached to a switch that is activated by the system case being opened. The Ibex Peak can be programmed to generate an SMI# or TCO interrupt due to an active INTRUDER# signal.

8.16 System Management Bus (SMBus 2.0)

The Ibex Peak contains an SMBus Host interface that allows the processor to communicate with SMBus slaves. This interface is compatible with most I2C devices. Special I2C commands are implemented.

The Ibex Peak's SMBus host controller provides a mechanism for the processor to initiate communications with SMBus peripherals (slaves). Also, the Ibex Peak supports slave functionality, including the Host Notify protocol. Hence, the host controller supports eight command protocols of the SMBus interface (see System Management Bus

(SMBus) Specification, Version 2.0): Quick Command, Send Byte, Receive Byte, Write Byte/Word, Read Byte/Word, Process Call, Block Read/Write, and Host Notify.

Ibex Peak's SMBus also implements hardware-based Packet Error Checking for data robustness and the Address Resolution Protocol (ARP) to dynamically provide address to all SMBus devices.

8.17 Intel Anti-Theft Technology

The Ibex Peak introduces a new hardware-based security technology which encrypts data stored on any SATA compliant HDD in AHCI Mode. This feature gives the end-user the ability to restrict access to HDD data by unknown parties. Intel Anti-Theft Technology can be used alone or can be combined with software encryption applications to add protection against data theft.

Intel Anti-Theft Technology functionality requires a correctly configured system, including an appropriate processor, Intel Management Engine firmware, and system BIOS support.

8.18 Intel Virtualization Technology for Directed I/O

The Ibex Peak provides hardware support for implementation of Intel Virtualization Technology with Directed I/O (Intel VT-d). Intel VT-d Technology consists of technology components that support the virtualization of platforms based on Intel Architecture Processors. Intel VT-d Technology enables multiple operating systems and applications to run in independent partitions. A partition behaves like a virtual machine (VM) and provides isolation and protection across partitions. Each partition is allocated its own subset of host physical memory.

8.19 JTAG Boundary-Scan

Ibex Peak adds the industry standard JTAG interface and enables Boundary-Scan in place of the XOR chains used in previous generations of the Ibex Peak. Boundary-Scan can be used to ensure device connectivity during the board manufacturing process. The JTAG interface allows system manufacturers to improve efficiency by using industry available tools to test the Ibex Peak on an assembled board. Since JTAG is a serial interface, it eliminates the need to create probe points for every pin in an XOR chain. This eases pin breakout and trace routing and simplifies the interface between the system and a bed-of-nails tester.

9 BIOS

9.1 Overview

The following features are supported by BIOS:

- System BIOS
- System Setup
- Onboard PCI video BIOS support
- SATA enabled for CDROM and HDD
- PCI FW3.0 compliant
- PCI-to-PCI bridge 1.0 compliant
- Plug and Play BIOS 1.0a compliant
- MP 1.4
- SMBIOS 2.5
- USB 1.1 with legacy USB support
- USB 2.0 support in BIOS during pre-boot
- Dell Server Assistant 7.0 support
- System Service support
- iDRAC supported
- Error logging via ESM
- ACPI 2.0 support (S0, OS-S4, S5 states)
- I2O v1.5 ready
- Selectable Boot support based on BIOS Boot Specification v1.01
- CD-ROM Boot 1.0
- Remote BIOS Update support
- Remote Configuration Interface (RCI) support
- Console redirection via COM1
- PXE support based on Preboot Execution Environment Specification v2.1
- 2-byte ID support
- ePPID support in flash
- Memory remapping support
- DDR3 UDIMM memory support
- UEFI shell Support
- IDRAC6/IDRAC6 Lite support
- VT-d
- IOAT

- AC recovery staggering Power-Up
- DIMM mismatch checking
- Support for multiple power profiles:
  - Static Maximum Performance Mode
  - OS Control (DBS)
  - Active Power Controller
  - Custom

9.2 ACPI

ACPI compliance: S0, S4, S5 supported

NO S1, S2, S3 (STR) support.

S4 will be supported by OS support only.

Table 14. Wake Up Events and States

Wake Up Events	States Can Wake From
RTC	S5, OS-S4
Power Button	S5, OS-S4
RI#	Not supported
PME#	S5, OS-S4
KB	Not supported
MOUSE	Not supported
USB	Not supported
WOL	S5, OS-S4

9.3 Power Management Modes

9.3.1 Dell Active Power Controller

The Dell Active Power Controller (DAPC) is a Dell proprietary implementation that provides improved performance/watt over the OS implementation of Intel's DBS. DAPC is implemented in system BIOS and uses hardware level counters, etc. to determine hardware utilization. The BIOS uses this information to determine when to change the processor's operating frequency. The DAPC is OS independent and means that the OS no longer has control. This provides a consistent power management solution regardless of the installed OS. Some OS(s), particularly hypervisors, do not support power management, thus DAPC provides a solution when there otherwise would not be one.

9.3.2 Power Saving BIOS Setting (OS Control)

Intel processors support Demand Based Switching (DBS) which enables the processor to dynamically change its operating frequency in response to workload changes. The industry standard implementation of this power management feature is in the Operating System (OS). The OS monitors process/thread level utilization of the processor and uses processor controls to change the processor's operating frequency. For heavy workloads, the OS will run the processor at higher frequencies for additional performance. Lighter workloads do not need high performance, thus the OS will run the processor at lower frequencies.

9.3.3 Maximum Performance

The Maximum Performance Mode disables power management. In this mode, the processor frequency is statically set to the highest supported frequency.

The power management features are implemented via two categories: **fixed** or **generic**. Fixed features use bits defined in the ACPI specification for specific capabilities. The **fixed** feature bits give the OS complete control over the power management of a device since the location of the bits is given to the OS in the FACP table. Thus, a driver can directly access bits to control a device's power management. **Generic** features have defined enable and status bits, but the functionality is not fully visible to the OS. Dell provides ASL code to handle the details of generic features, allowing the OS to intelligently communicate with system-specific hardware.

Table 15. Summary of R210 Power Management Features

Feature	Type	Enable/Status /Ctrl bit location	Description
ACPI mode switch	Fixed	PCH	The OS uses the SCI_EN bit to switch from legacy mode to ACPI mode.
Sleep states	Fixed	PCH	Supported states: S0(Working), S4-OS ('Hibernation' in W2K), and S5 (Soft-off). S1 (also called 'standby' or 'suspend') and S3 are **not** supported.
Power Button	Fixed	PCH	In ACPI mode, OS has control of the power button. In non-ACPI mode, SMI handler owns power button events.
Real-Time Clock	Fixed	PCH	The OS is able to configure the system to wake on the RTC alarm.
Power Mgmt. Timer	Fixed	PCH	24-bit power management timer is used.
Power Mgmt. Event (PME)	Generic	PCH	Each host bus's PME# signal is routed to a separate general-purpose event pin in the chipset. When a device signals PME#, the system wakes (if necessary), the OS detects the event, and a Dell defined ASL routine handles the event. Wake-on-LAN is one example of a PME.

USB wake	Generic	N/A	This feature is not supported on this system since the S1 state is not supported.
DBS	N/A	Processor MSRs	This feature does P state transition under Windows
C State Support	N/A	Processor and PCH registers	This feature allows multiple C state supports for Processor. This feature will work under Windows and ACPI OS that understand C states.
Power Profile support	N/A	Processor/IMC and PCH chipset registers.	11G Servers will be the most energy smart servers that Dell will ship. In addition to P,C and T states, BIOS will expose the Power Profiles to the OS. Each Power profile will have a specific settings and it will fine tune processor, MCH, IOH and South Bridge. For detailed explanation on how this feature works, please look at BIOS Power Management specification located in Design Docs under R310 engineering.

Table 16. Power Profiles that R210 BIOS will Expose in BIOS Setup

Maximum Performance	DBPM Disabled (BIOS will set P-State to MAX) Memory frequency = Maximum Performance Fan algorithm = Maximum Performance
OS Control	Enable OS DBPM Control (BIOS will expose all possible P states to OS) Memory frequency = Maximum Performance Fan algorithm = Minimum Power
Active Power Controller	Enable DellSystem DBPM (BIOS will not make all P states available to OS) Memory frequency = Maximum Performance Fan algorithm = Minimum Power
Custom	**CPU Power and Performance Management:** Maximum Performance | Minimum Power | OS DBPM | System DBPM **Memory Power and Performance Management:** Maximum Performance |1333Mhz |1067Mhz |800Mhz| Minimum Power **Fan Algorithm** Maximum Performance | Minimum Power

10 I/O Slots

10.1 Overview

The PowerEdge R210 system provides:

- Riser support x16 PCIe card (Gen2 link x16)
- Support x16 bandwidth card under 25W

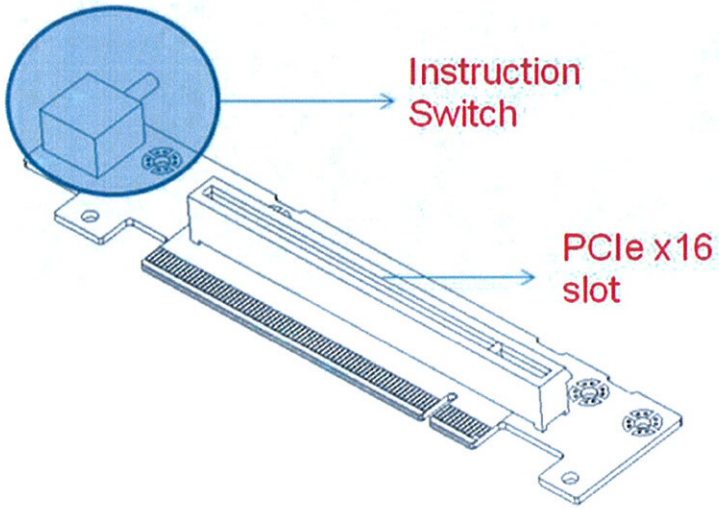

Figure 13. PCIe x16 Riser Card

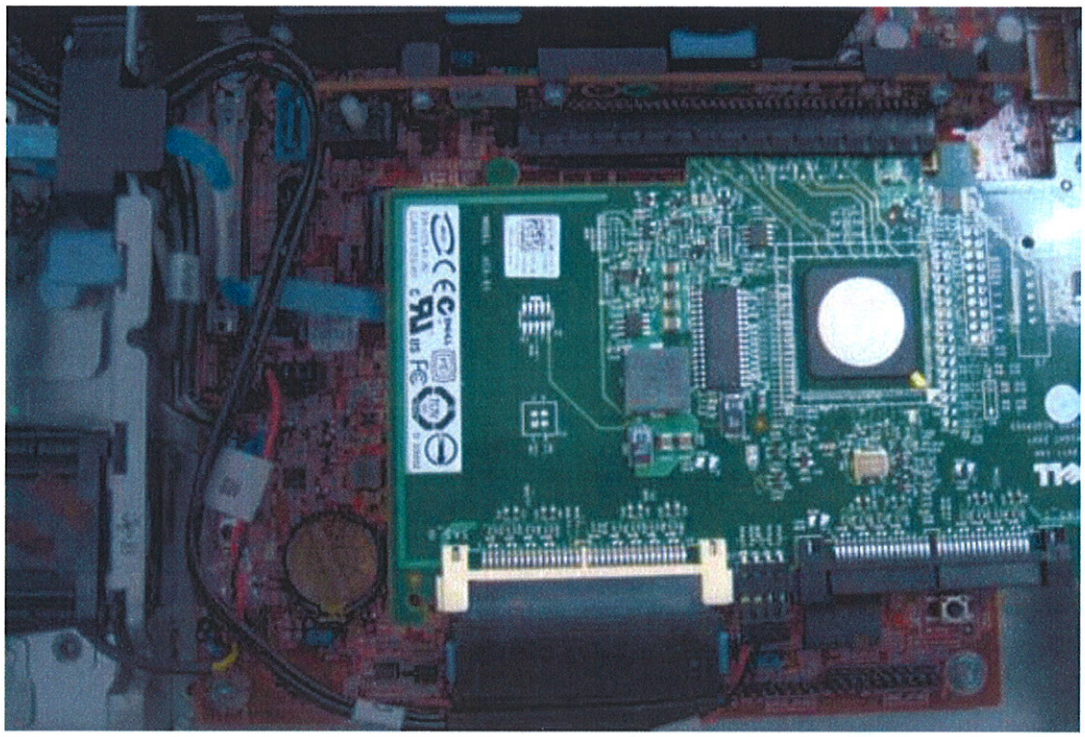

Figure 14. SAS 6/iR Adapter Card Installed

10.2 PCI Devices

Xeon 3400 Series CPU PCI devices include:

- Intel QuickPath Architecture Generic Non-core Registers
- Intel QuickPath Architecture System Address Decoder
- Intel QuickPath Interconnect Link 0
- Intel QuickPath Interconnect Physical 0
- Integrated Memory Controller General Registers
- Integrated Memory Controller Target Address Decoder
- Integrated Memory Controller Test Registers
- Integrated Memory Controller Channel 0 Control
- Integrated Memory Controller Channel 0 Address
- Integrated Memory Controller Channel 0 Rank
- Integrated Memory Controller Channel 0 Thermal Control
- Integrated Memory Controller Channel 1 Control
- Integrated Memory Controller Channel 1 Address
- Integrated Memory Controller Channel 1 Rank
- Integrated Memory Controller Channel 1 Thermal Control
- DMI Root Port
- PCI Express Root Port 1
- PCI Express Root Port 3

- Core Addressing Mapping, Intel VT-d, System Management
- Core Semaphore and Scratchpad Registers
- Core System Control/Status Registers
- Core Miscellaneous Control/Status Registers
- Intel QuickPath Interconnect Link
- Intel QuickPath Interconnect Routing and Protocol

Core i3/Pentium/Celeron CPU PCI devices include:

- Host Bridge/DRAM Controller
- Host-to-PCI Express Bridge
- Internal Graphics Device
- Secondary Host-to-PCI Express Bridge

PCH and Slots devices include:

- Virtualization Engine Controller Interface (VECI)
- USB HS EHCI Controller #2
- PCI Express Port 1
- PCI Express Port 2
- PCI Express Port 3
- PCI Express Port 4
- PCI Express Port 5
- PCI Express Port 6
- PCI Express Port 7
- PCI Express Port 8
- USB HS EHCI Controller #1
- DMI-to-PCI Bridge
- LPC Controller1
- SATA Controller #1
    - Non-AHCI and Non-RAID Mode (Ports 0,1, 2 and 3)
    - Desktop Non-AHCI and Non-RAID Mode (Ports 0 and 1)
    - AHCI Mode (Ports 0-5)
    - AHCI Mode (Ports 0,1,4 and5)
    - RAID 0/1/5/10 mode
- SMBus Controller
- SATA Controller #2
    - Non-AHCI and Non-RAID Mode (Ports 4 and 5)
- Thermal Subsystem
- Slot 1 PCI-E x16 [IIO]
- BCM5716 (1)
- BCM5716 (2)
- Matrox® G200eW w/ 8MB memory

The onboard devices are SATA, USB (x4), SMBus, IOxAPIC, and the LOM.

Table 17. I/O Slot Information

PCI Slot #	Mechanical	Electrical	Height	Length
1	PCIe x 16	PCIe x 16 Gen 2	Full	Half

Table 18. PCI Card Dimensions

Link Width		Height	Length
x1	Standard height, half length card	111.15 mm (4.376 inches) max	167.65 mm (6.600 inches max
X1, x4, x8, x16	Standard height, full length cards	111.15 mm (4.376 inches) max	312.00 mm (12.283 inches) max
	Low profile cards	68.90 mm (2.731 inches) max	167.65 mm (6.600 inches) max

Table 19. Bandwidth, Quantities, and Priorities

Category	Description	Bandwidth	Max Qty.	Slot Priority
Internal Storage Controllers	Dell™ SAS 6iR Adapter (SAS-RAID)	PCIe x8	1	1
	Dell™ PERC S300 (SW RAID)	PCIe x8	1	1
	Dell™ PERC H200 (HW RAID)	PCIe x8	1	1
External Storage Controllers	Dell™ SAS 5E Adapter	PCIe x8	1	1
	Dell™ PERC 6E Adapter 256MB	PCIe x8	1	1
	Dell™ PERC 6E Adapter 512MB	PCIe x8	1	1
	6Gbps SAS HBA	PCIe x8	1	1
	Dell™ PERC H800	PCIe x8	1	1
Optional NICs	Dell™ LSI2032 PCIe HBA SCSI Adapter	PCIe x4	1	1
	Intel® Gigabit ET Dual Port Server Adapter	PCIe x4	1	1
	Broadcom® NetXtreme™ II 5709 Dual Port Ethernet PCIe Card with TOE	PCIe x4	1	1
	Broadcom® NetXtreme™ II 5709 Dual Port Ethernet PCIe Card with TOE and iSCSI Offload	PCIe x4	1	1
	Intel® PRO/1000 PT Server Adapter	PCIe x1	1	1
	Intel® Gigabit ET Quad-Port Server Adapter	PCIe x4	1	1
	Broadcom® NetXtreme™ II BCM5709 Quad Port Ethernet PCIe™ Card with TOE and iSCSI Offload	PCIe x4	1	1

10.3 Boot Order

The PowerEdge R210 supports only 1 PCIe x8 slot.

10.4 NICs

There is Broadcom 5716 chip on the PowerEdge R210 motherboard. The chip is connected to the PCH via a PCI Express x4 gen2 link. Broadcom 5716 does not support TOE (TCP Offload Engine).

The chip provides two Gigabit Ethernet ports. There are two RJ-45 connectors with integrated magnetic and LED on the rear of the system. The firmware for the LOM chip resides in a flash part.

The PowerEdge R210 supports Wake on LAN (WOL) from either port.

For listing of NICs supported on the R210, please see Section 10.1 Table 24

11 Storage

11.1 Overview

The PowerEdge R210 supports up to 2 HDDS:

- 2 x 2.5"/ 3.5" cabled SATA or SSD from motherboard SATA connector
- 2 x 2.5"/ 3.5" cabled SAS, SSD, or SATA via add-on storage controller

Customer must be selected at point of purchase. This is not an upgrade option for APOS.

11.2 Drives

Table 20. Available Drives

Drive	Specifications
HDD Bays	2 x 3.5" or 2 x 2.5" Cabled only
HDD/SATA	3.5"/7.2K: 160, 250, or 1000GB, 2000GB
HDD/Near Line SAS	3.5"/7.2K: 1000GB, 2000GB
HDD/SAS	3.5"/15K: 146, 300, or 450GB, 600GB 3.5"/10K: 600GB 2.5"/10K: 146 or 300GB
HDD/SSD	2.5": or 50GB, 100GB

11.3 RAID Configurations

Table 21. RAID Configurations

				Non-Mixed Drives, all SATA, all SSD, or ALL SAS	
Config Type	**Configs #**	**Name**	**Description**	**Min HDD**	**Max HDD**
No HDD	0	NCZCBL	No controller/No hard drive	0	0
SATA - No Raid	1	MSTCBL	On-board SATA Controller (Ibex Peak)	1	2
SATA Raid	2	MSTR0CBL	Embedded SATA SW RAID - RAID0	2	2
	3	MSTR1CBL	Embedded SATA SW RAID - RAID1	2	2
SAS/SATA RAID	4	ASSCBL	Add-in SAS/SATA RAID card, No RAID (S300)	1	1
	5	ASSCBL	Add-in SAS/SATA RAID card, No RAID (S300) with 2 HDDs	2	2
	6	ASSR0CBL	Add-in SAS/SATA RAID card, RAID 0 (S300)	2	2
	7	ASSR1CBL	Add-in SAS/SATA RAID card, RAID 1 (S300)	2	2
	8	ASSCBL	Add-in SAS/SATA RAID card, No RAID (SAS 6/iR /H200)	1	2
	9	ASSR0CBL	Add-in SAS/SATA RAID card, RAID 0 (SAS 6/iR /H200)	2	2
	10	ASSR1CBL	Add-in SAS/SATA RAID card, RAID 1 (SAS 6/iR/H200)	2	2

11.4 Optical Disk Drive (ODD)

The PowerEdge R210 will support up to 1 slim type internal optical drive and optional external USB DVD-ROM. The PowerEdge R210 can boot from either the internal optical drive or the optional external drive and supports the following:

- Configurations with no ODD
- Optional internal DVD-ROM (SATA)
- Optional internal DVD+RW (SATA)

11.5 Tape Drives

Table 22. Supported Tape Drives

PV DAS	PowerVault™ MD1000
	PowerVault™ MD3000
	PowerVault™ MD1120
External TBU	PowerVault™ RD1000
	PowerVault™ 114X
	PowerVault™ DAT 72
	PowerVault™ LTO-3-060
	PowerVault™ 110T LTO-3
	PowerVault™ LTO4-120
External TBU/Automation	PowerVault™ ML6000
	PowerVault™ 124T
	PowerVault™ TL2000/TL4000

12 Video and Audio

12.1 Video

Matrox® G200eW w/ 8MB memory integrated in Winbond® WPCM450 (BMC controller):

- 640x480 (60/72/75/85 Hz; 8/16/32-bit color)
- 800x600 (60/72/75/85 Hz; 8/16/32-bit color)
- 1024x768 (60/70/75/85 Hz; 8/16/32-bit color)
- 1280x1024 (60/75/85 Hz; 8/16-bit color)
- 1280x1024 (60 Hz, 32-bit color)

12.2 Audio

The PowerEdge R210 does not support audio (sound card or speakers).

13 Rack Information

13.1 Overview

The ReadyRails™ static rail system for the R210 provides tool-free support for racks with square or unthreaded round mounting holes (including Dell's 42xx and 24xx series racks) with an adjustment range of 60-87 cm. The rails also offer tooled mounting support for 4-post threaded and 2-post (Telco) racks for added versatility.

13.2 Rails

The static rails for the R210 support tool-less mounting in 19"-wide, EIA-310-E compliant square hole and unthreaded round hole racks via Dell's ReadyRails™ mounting interface. The rails also support a "generic" mounting interface for tooled mounting in threaded hole and 2-post (Telco) racks. Screws are **not** included in the kit since threaded racks are offered with a variety of thread designations. Users must provide their own screws when mounting the rails in threaded or 2-post racks.

Table 23. PowerEdge R210 Rail Information

Rail Identifier	Mounting Interface	Rail Type	Rack Types Supported				
			4-Post			2-Post	
			Square	Round	Thread	Flush	Center
A4	ReadyRails™/Generic	Static	Yes	Yes	Yes	Yes	Yes

The adjustment range of the rails is a function of the type of rack in which they are being mounted. The min-max values listed below represent the allowable distance between the front and rear mounting flanges in the rack.

Figure 15. Rack Adjustability Range

Rail Identifier	Mounting Interface	Rail Type	Rack Adjustability Range (mm)						Rail Depth (mm)	
			Square		Round		Threaded		Without CMA	With CMA
			Min	Max	Min	Max	Min	Max		
A4	ReadyRails™/Generic	Static	608	879	594	872	604	890	622	—

13.3 Cable Management Arm (CMA)

The static rails for the R210 support a wide variety of racks and mounting configurations but do not support the ability to extend the system out of the rack for service. Thus, they do not provide support for a cable management arm (CMA).

14 Operating Systems

For the most up-to-date information, see the Operating System Support Matrix for Dell PowerEdge Systems on Dell.com.

Table 24. Supported Microsoft Operating Systems

Operating Systems	x86 or x64	Installation	Factory Install	Logo/ Certification
Windows® Essential Business Server	X64	Standard	DIB	N/A
		Premium		
Microsoft® Hyper-V™ Server 2008	X64	Standard	Download	N/A
Windows® Small Business Server 2008	X64	Standard	FI	N/A
		Premium		
Windows Server® 2008	x32-bit x86	Web	Test Only	WHQL
		Standard		
		Enterprise		
	x64 (Hyper-V™ role enabled except for foundation)	Web	Test Only	WHQL
		Standard		
		Foundation		
		Enterprise		
Windows Server® 2003 R2	32-bit x86	Standard	Test Only	WHQL
		Enterprise		
	x64	Standard	Test Only	WHQL
		Enterprise		
Windows Server® 2008 SP2	X86	Web	FI	WHQL (WLK1.4)
		Standard		
		Enterprise		
	X64 (Hyper-V™ role enable)	Web		
		Standard		
		Enterprise		
Windows Server® 2008 R2 (Windows 7 includes SP2 bits)	X64 (only) (Hyper-V™ role enabled except for foundation)	Web	FI	WHQL (WLK1.4)
		Standard		
		Foundation		
		Enterprise		

Table 25. Supported Linux Operating Systems

Operating Systems	x86 or x64	Installation	Factory Install	Logo/ Certification
Red Hat® Enterprise Linux® 4.8	x86-64	ES	DIB, NFI	Yes
	x86	ES	DIB, NFI	Yes
Red Hat® Enterprise Linux® 5.3	x86-64	Enterprise	FI	Yes
	x86	Enterprise	DIB, NFI	Yes
Novell® SUSE® Linux® Enterprise S10 SP3	x86-64	ES	DIB, NFI	Yes
Novell® SUSE® Linux® Enterprise S11	X86-64	ES	FI	Yes

15 Virtualization

Table 26. Supported Virtualization OS

Virtualization OS	Install Method
VMware® ESX 4 update 1	DIB
Embedded VMware ESXi 4 update 1	Download version
VMWare ESX 3.5.1	Supported; not offered through Dell (No FI nor DIB)
VMWare ESXi 3.5.1	Supported; not offered through Dell (No FI or DIB)
PlateSpin® PowerConvert®	Website download fulfillment; instructions are DIB
Vizioncore™ suite: vRanger™ Pro vConverter™ vReplicator vFoglight™	Website download fulfillment; instructions are DIB

16 Systems Management

16.1 Overview

Dell delivers open, flexible, and integrated solutions that help you reduce the complexity of managing disparate IT assets by building comprehensive IT management solutions. Combining Dell PowerEdge Servers with a wide selection of Dell-developed management solutions gives you choice and flexibility, so you can simplify and save in environments of any size. To help you meet your server performance demands, Dell offers Dell OpenManage systems management solutions for:

- Deployment of one or many servers from a single management console
- Monitoring of server and storage health and maintenance
- System update, configuration change, and maintenance

Dell offers IT management solutions for organizations of all sizes—priced, sized, and supported right.

16.2 Server Management

A Dell Systems Management and Documentation DVD and a Dell Management Console DVD are included with the product. Content includes:

- **Dell Systems Build and Update Utility**: Dell Systems Build and Update Utility assists in OS install and pre-OS hardware configuration and updates.
- **OpenManage Server Administrator**: The OpenManage Server Administrator (OMSA) tool provides a comprehensive, one-to-one systems management solution, designed for system administrators to manage systems locally and remotely on a network. OMSA allows system administrators to focus on managing their entire network by providing comprehensive one-to-one systems management.
- **Management Console**: Our legacy IT Assistant console is also included, as well as tools to allow access to our remote management products. These tools are Remote Access Service for iDRAC and the BMC Management Utility.
- **Active Directory Snap-in Utility**: The Active Directory Snap-in Utility provides an extension snap-in to the Microsoft Active Directory. This allows you to manage Dell specific Active Directory objects. The Dell-specific schema class definitions and their installation are also included on the DVD.
- **Dell Systems Service Diagnostics Tools**: Dell Systems Service and Diagnostics tools deliver the latest Dell optimized drivers, utilities, and operating system-based diagnostics that you can use to update your system.
- **eDocs**: The section includes PDF files for PowerEdge systems, storage peripheral, and OpenManage software.
- **Dell Management Console DVD**: The Dell Management Console is a Web-based systems management software that enables you to discover and inventory devices on your network. It also provides advanced functions, such as health and performance monitoring of networked devices and patch management capabilities for Dell systems.

- **Server Update Utility:** In addition to the Systems Management Tools and Documentation and Dell Management Console DVDs, customers have the option to obtain Server Update Utility DVD. This DVD has an inventory tool for managing updates to firmware, BIOS, and drivers for either Linux or Windows operating systems.

16.3 Embedded Server Management

The PowerEdge R210 implements circuitry for the next generation of embedded server management. It is Intelligent Platform Management Interface (IPMI) v2.0 compliant. The optional iDRAC (Integrated Dell Remote Access Controller) is responsible for acting as an interface between the host system and its management software and the periphery devices. These periphery devices consist of the PSUs, the storage backplane, integrated SAS HBA or PERC 6/I, and control panel with display.

The optional upgrade to iDRAC6 provides features for managing the server remotely or in data center lights-out environments.

Advanced iDRAC features require the installation of the optional iDRAC6 Enterprise card.

16.4 Lifecycle Controller and Unified Server Configurator

Embedded management is comprised of four key components:

- Dell Lifecycle Controller
- Dell Unified Server Configurator
- iDRAC6 (Integrated Dell Remote Access Controller)
- vFlash (virtual flash media)

Lifecycle Controller powers the embedded management features. It is integrated and tamperproof storage for system-management tools and enablement utilities (firmware, drivers, etc.).

Dell Unified Server Configurator (USC) is a local 1:1 graphical user interface embedded on Lifecycle Controller that aids in local server provisioning in a pre-OS environment. For servers with iDRAC Express, the Lifecycle Controller offers OS install, platform updates, platform configuration, and diagnostics capabilities. For servers without iDRAC6 Express, this utility has limited functionality and offers OS install and diagnostics capabilities only.

To access the Unified Server Configurator, press the <F10> key within 10 seconds of the Dell logo's appearance during the system boot process. Current functionality enabled by the Unified Server Configurator is detailed in the following table.

Table 27. Unified Server Configurator Features and Description

Feature	Description
Faster O/S Installation	Drivers and the installation utility are embedded on system
Faster System Updates	Integration with Dell support automatically directed to latest versions of the Unified Server Configurator, iDRAC, RAID, BIOS, NIC, and Power Supply
Update Rollback	Ability to recover to previous known good state for all updatable components
More Comprehensive Diagnostics	Diagnostic utilities are embedded on system
Simplified Hardware Configuration	Detects RAID controller and allows user to configure virtual disk and choose virtual disk as boot device, eliminating the need to launch a separate utility. Also provides configuration for iDRAC, BIOS, and NIC/LOM.

16.5 iDRAC6 Express

The optional iDRAC6 Express is the first tier of iDRAC6 upgrades. In addition to upgrading the system with a Lifecycle Controller, the iDRAC6 Express offers the following key features:

- Graphical web interface
- Standard-based interfaces
- Server Sensor monitoring and fault alerting
- Secure operation of remote access functions including authentication, authorization, and encryption
- Power control and management with the ability to limit server power consumption and remotely control server power states
- Advanced troubleshooting capabilities

For more information on iDRAC6 Express features see table below.

16.6 iDRAC6 Enterprise

The optional iDRAC6 Enterprise card provides access to advanced iDRAC6 features. The iDRAC6 Enterprise connects directly to the R210 planar and is mounted parallel to the planar with stand-offs.

Key features for the iDRAC6 Enterprise include:

- Scripting capability with Dell's Racadm command-line
- Remote video, keyboard, and mouse control with Virtual Console
- Remote media access with Virtual Media
- Dedicated network interface

Additionally, the iDRAC6 Enterprise can be upgraded by adding the vFlash Media card. This is a 1 GB Dell branded SD card that enables a persistent 256 or 512 MB virtual

flash partition. A more detailed feature list for iDRAC6 Enterprise and vFlash is included in the following table.

Table 28. Features List for BMC, iDRAC6, and vFlash

Feature	BMC	iDRAC6 Express	iDRAC6 Enterprise	vFlash Media
Interface and Standards Support				
IPMI 2.0	✓	✓	✓	✓
Web-based GUI		✓	✓	✓
SNMP		✓	✓	✓
WSMAN		✓	✓	✓
SMASH-CLP		✓	✓	✓
Racadm command-line			✓	✓
Conductivity				
Shared/Failover Network Modes	✓	✓	✓	✓
IPv4	✓	✓	✓	✓
VLAN Tagging	✓	✓	✓	✓
IPv6		✓	✓	✓
Dynamic DNS	✓	✓	✓	✓
Dedicated NIC			✓	✓
Security and Authentication				
Role-based Authority	✓	✓	✓	✓
Local Users	✓	✓	✓	✓
Active Directory		✓	✓	✓
SSL Encryption		✓	✓	✓
Remote Management and Remediation				
Remote Firmware Update	✓	✓	✓	✓
Server power control	✓	✓	✓	✓
Serial-over-LAN (with proxy)	✓	✓	✓	✓
Serial-over-LAN (no proxy)		✓	✓	✓
Power capping		✓	✓	✓
Last crash screen		✓	✓	✓

Feature	BMC	iDRAC6 Express	iDRAC6 Enterprise	vFlash Media
capture				
Boot capture		✓	✓	✓
Serial-over-LAN		✓	✓	✓
Virtual media			✓	✓
Virtual console			✓	✓
Virtual console sharing			✓	✓
Virtual flash				✓
Monitoring				
Sensor Monitoring and Alerting	✓	✓	✓	✓
Real-time Power Monitoring*	✓	✓	✓	✓
Real-time Power Graphing*	✓	✓	✓	✓
Historical Power Counters*	✓	✓	✓	✓
Logging Features				
System Event Log	✓	✓	✓	✓
RAC Log		✓	✓	✓
Trace Log			✓	✓

* BMC availability through OpenManage

17 Peripherals

17.1 USB

All PowerEdge systems have a minimum of 2 front-accessible USB 2.0 compliant ports with enough spacing around to accommodate full usage of both connectors simultaneously along with any/all other front panel features (Video connector, buttons, LED's, etc.) without mechanical interference. These ports are connected to the same controller and not shared with internal or back USB ports

For security reasons, all external USB ports must have an enable/disable function.

Disabling USB controllers must observe the hierarchy in Table 29 (listed from lowest to highest priority in a 4 controller design).

Internal USB ports connected to internal persistent storage devices have an enable/disable function independent of the other ports present in the system.

Table 29. USB Controller Priorities

USB Controller	Function	If Disabled
4 (Lowest)	Internal USB peripherals	No other Controller is disabled
3	Front USB	Controller 4 is disabled as well
2	Back USB	Controllers 3 & 4 are disabled as well
1 (Highest)	Remote Access (RAC)	Controllers 2,3, & 4 are disabled as well

The above hierarchy dictates that connections that are lower in the hierarchy must be disabled anytime a higher level connection is disabled (e.g., when Back USB is disabled the Front USB ports are also disabled).

17.2 USB Device

Optional external USB DVD-ROM.

17.3 External Storage

Table 30. External Storage

External Optical Drive (Optional)	USB DVD-ROM
PowerVault™ DAS	MD1000 JBOD
	MD3000 RBOD
	MD1120 - 2.5 SAS/SATA JBOD
External TBU	RD1000 USB
	PV114T (2U)
	DAT 72 SCSI
	LTO3-060 SCSI
	LTO3FH SCSI
	LTO4-120 HH and FH SAS
External TBU/Automation	ML6000
	PV124T
	TL2000
	TL4000

18 Packaging Options

Options for single pack and multipack are available. Multipack will support 4 units in one pack.

Table 31. AMF Single Pack Dimensions and Weights

INSIDE DIMENSIONS	OUTSIDE DIMENSIONS	WEIGHT
Length: 81.3 cm (32") **Width:** 59.4 cm (23.38") **Depth:** 23.5 cm (9.25")	**Length:** 82.9 cm (32.63") **Width:** 61 cm (24") **Depth:** 26.7 cm (10.5")	**System packed out weight:** **PowerEdge R210:** 9.71 kg (21.42 lbs) **Cushion:** 0.42 kg (.93 lbs) **Corrugated Box:** 2.75 kg (6.05 lbs) **Total Weight:** 12.88 kg (28.4 lbs)

Table 32. EMF Single Pack Dimensions and Weights

INSIDE DIMENSIONS	OUTSIDE DIMENSIONS	WEIGHT
Length: 61.9 cm (24.38") **Width:** 59.4 cm (23.38") **Depth:** 24.1 cm (9.50")	**Length:** 63.5 cm (25.00") **Width:** 61 cm (24") **Depth:** 27.3 cm (10.75")	**System packed out weight:** **PowerEdge R210:** 8.56 kg (18.87 lbs) **Cushion:** 0.36 kg (.80 lbs) **Corrugated Box:** 2.06 kg (4.55 lbs) **Total Weight:** 10.98 kg (24.2 lbs)

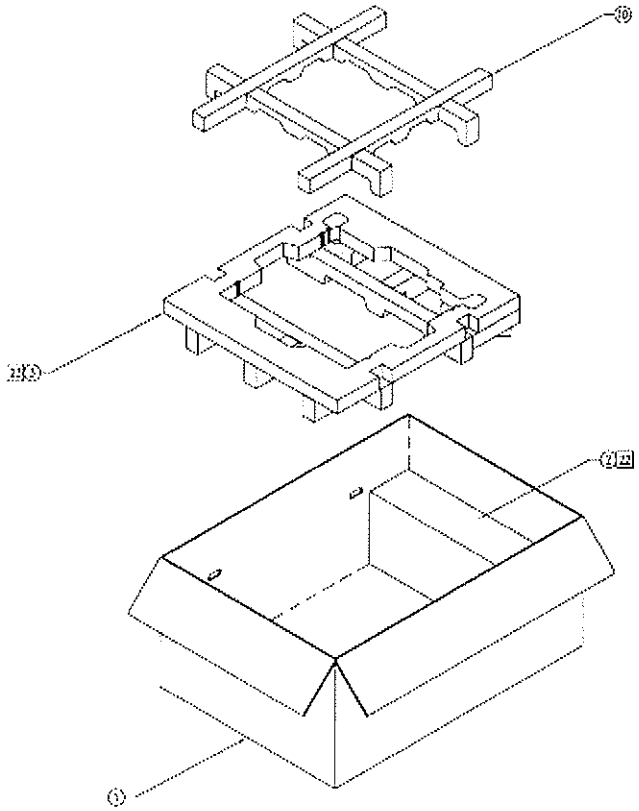

Figure 16. Packaging

Appendix A. Regulatory Certifications

- FCC (U.S. only) Class A
- ICES (Canada) Class A
- CE Mark (EN 55022 Class A, EN55024, EN61000-3-2, EN61000-3-3)
- VCCI (Japan) Class A
- BSMI (Taiwan) Class A
- C-Tick (Australia/New Zealand) Class A
- NRCS/SABS (South Africa) Class A
- CCC (China) Class A
- KCC (Korea) Class A
- UL 60950-1
- CAN/CSA C22.2 No. 60950-1
- EN 60950-1
- IEC 60950-1
- IRAM (Argentina)
- NOM (Mexico)
- Bellis (Belarus)
- Koncar (Croatia)
- TUV GS (Germany)
- SII (Israel)
- CKT (Kazakhstan)
- KEBS (Kenya)
- INSM (Moldova)
- Soncap (Nigeria)
- Nemko (Norway)
- GOST (Russia)
- KVALITET (Serbia, Bosnia, Herzegovina, Montenegro)
- UKRTEST (Ukraine)
- UZBEKISTAN GOST (Uzbekistan)
- KUCAS (Kuwait)
- KSA-ICCP (Saudi Arabia)
- MPT (Vietnam)

Appendix B. R210 Volatility Tables

Table 33. PowerEdge R210 Volatility

	Non-Vol-atile	Vol-atile RAM	Refer-ence Design-ator	Qty	Size	Type
Planar						
System BIOS SPI Flash	Y		SYS_SPI	1	4MB	Flash EEPROM (SPI interface)
LOM Configuration Data	Y		U7	1	512KB	FLASH (NOR)
iDRAC6 Controller ROM	Y		U_IBMC1	1	4KB	ROM
iDRAC6 Controller RAM		Y	U_IBMC1	1	8KB	RAM
System CPLD	Y		U_CPLD1	1	1200 Macro cells	Internal Flash EEPROM
System CPLD		Y	U_CPLD1	1	1KB	RAM
iDRAC6 Express Internal Flash	Y		U_EMMC	1	1GB	NAND FLASH
System RAM		Y	DIMM_A1, DIMM_A2, DIMM_B1, DIMM_B2	4	up to 4 DIMMs 16GB	RAM
TPM ID EEPROM (Plug in module only)	Y		U_SEEPROM	1	256B	EEPROM
TPM Binding EEPROM (on China planar only)	Y		U21	1	256B	EEPROM

	Non-Vol-atile	Vol-atile RAM	Refer-ence Design-ator	Qty	Size	Type
iDRAC6 SDRAM		Y	U_IBMC_MEM	1	128MB	DDR2 RAM
iDRAC6 FRU	Y		U_IBMC_FRU	1	4KB	EEPROM
iDRAC6 Boot Block Flash	Y		IBMC_SPI	1	16MB	FLASH (NOR)
Trusted Platform Module	Y	N	U_TPM1	1	128 bytes	EEPROM
Chipset						
CMOS	Y		U_PCH1	1	256B	Battery-backed RAM
Control Panel						
Internal USB	Y		USB3 USB4	2	User selectable	License key hard set ROM or user choice
iDRAC6 Enterprise						
vFlash	Y		J_SD (connector)	1	1GB	Secure Digital NAND Flash

Table 34. Volatility: Data Writing and Purpose

	Can user programs or operating system write data to it during normal operation?	Purpose?
Planar		
System BIOS SPI Flash	No	Not used
LOM Configuration Data	NO	iDRAC Internal RAM
iDRAC6 Controller ROM	No	System-Specific Hardware Logic
iDRAC6 controller RAM	No	Not used
System CPLD (non-volatile)	No for iDRAC Operating System; Yes for Managed System Services Repository	iDRAC Operating System plus Managed System Services Repository (i.e., Unified Server Configurator, OS drivers, diagnostics, rollback versions of various programmables)
System CPLD (volatile)	Yes	System OS RAM
iDRAC6 Express Internal Flash	No	Not used
System RAM	NO	iDRAC internal RAM
TPM ID EEPROM (Plug in module only)	No	BIOS binding of plug in module to a particular planar.
TPM Binding EEPROM (China only)	No	BMC OS + VGA frame buffer
iDRAC6 SDRAM	No	motherboard electronic product identifier
iDRAC6 FRU	No	iDRAC boot loader and configuration (i.e. MAC address), Lifecycle log. nd system event log.
iDRAC6 Boot Block Flash	yes	Storage of encryption keys
Trusted Platform Module	No	BIOS binding of plug-in module to a particular planar

	Can user programs or operating system write data to it during normal operation?	Purpose?
Chipset		
CMOS	No	BIOS settings
Control Panel		
Internal USB	Yes as allowed by OS	Normal usage is read only software license key, but not limited
iDRAC6 Enterprise		
vFlash	Yes when enabled, installed, and the media does not have the write protect switch applied	Storage of logs, user images such as files, drivers, and Operating Systems

Table 35. Methodology for Data Input to Memory

	How is data input to this memory?
Planar	
System BIOS SPI Flash	Loading flash memory requires a vendor-provided firmware file and loader program which is executed by booting the system from a floppy or OS-based executable containing the firmware file and the loader. System loaded with arbitrary data in firmware memory will not operate
LOM Configuration Data	Loading flash memory requires a vendor-provided firmware file and loader program which is executed by booting up the system from a floppy or OS based executable containing the firmware file and the loader. LOMs loaded with arbitrary data in firmware memory will not operate.
iDRAC6 Controller RAM	iDRAC embedded system
System CPLD	Loading flash memory requires a vendor-provided firmware file and loader program which is executed by booting up the system from a floppy or OS-based executable (currently only DRMK utility support) containing the firmware file and the loader. System loaded with arbitrary data in CPLD memory will not operate.
iDRAC6 Express Internal Flash	Not used
System RAM	iDRAC OS: Loading flash memory requires a vendor-provided firmware file and loader program which is executed by booting the system from a floppy or OS-based executable containing the firmware file and the loader. System loaded without a good iDRAC firmware image yields a non-functional iDRAC.

	How is data input to this memory?
	Managed Services Repository: Various partitions are loaded using vendor-provided firmware file and loader program just like iDRAC OS.
TPM ID EEPROM (Plug-in module only)	Factory loaded only
TPM Binding EEPROM (on China planar only)	BIOS only
iDRAC6 SDRAM	Embedded iDRAC OS for 108MB and 8MB for VGA frame buffer
iDRAC6 FRU	Factory and iDRAC embedded OS
iDRAC6 Boot Block Flash	Loading flash memory requires a vendor-provided firmware file and loader program which is executed by booting up the system from a floppy or OS-based executable or out of band firmware updates across the management network. Bad contents yield the iDRAC inoperable and unrecoverable in the customer environment. The lifecycle log is automatically updated by the iDRAC as various system component firmware, hardware, and software versions change.
Trusted Platform Module	Using TPM-enabled operating systems; except in China where TCM is used.
Chipset	
CMOS	BIOS control only via input such as BIOS F2 menu user configuration settings (such as boot order)
Control Panel	
Internal USB	Either read only license key or OS control copies
iDRAC6 Enterprise	
vFlash	Preloaded media before installation, or remote out-of-band upload of user data (i.e., ISO images, files) or local server read/write capability to use like a hard disk.

Table 36. Methodology for Memory Protection and Clearing

	How is this memory write protected?	How is the memory cleared?
Planar		
System BIOS SPI Flash	Software write protected	Not possible with any utilities or applications and system is not functional if corrupted/removed.
LOM Configuration Data	No explicitly protected but special applications are needed to communicate through the LOMs to reprogram this ROM	Not user clearable
iDRAC6 Controller ROM	protected permanently by hardware	Not clearable
iDRAC6 controller RAM	n/a	iDRAC reset
System CPLD (non-volatile)	Requires special system specific utility	Not possible with any utilities or applications and system is not functional if corrupted/removed.
System CPLD (volatile)	Not accessible	Not clearable
iDRAC6 Express Internal Flash	Writes are proxied through a temporary iDRAC scratchpad RAM and not directly made from an OS or OS application	Not user clearable
System RAM	OS control	Reboot or power down system
TPM ID EEPROM (Plug in module only)	HW read only	Not clearable, read only

TPM Binding EEPROM (on China planar only)	Locked by BIOS from physical access by anyone after boot	Not applicable, BIOS control only
iDRAC6 SDRAM	n/a	AC cycle for BMC OS and reset/power off server for VGA frame buffer
iDRAC6 FRU	writes controlled by iDRAC embedded OS	EPPID is not clearable
iDRAC6 Boot Block Flash	iDRAC embedded OS control of the write protection	Not possible with any utilities or applications and iDRAC does not function as expected if corrupted/removed. Lifecycle log is clearable only in a factory environment; System Event Log is user clearable
Trusted Platform Module	SW write protected	F2 Setup option
Chipset		
CMOS	N/A, BIOS only control	Planar NVRAM_CLR jumper or by removal of AC cord, cover, and coin cell battery, then waiting 30 seconds prior to replacement of battery, cover and AC cord.; F2 system setup option is used to restore defaults
Control Panel		
Internal USB	OS control	OS control format
iDRAC6 Enterprise		
vFlash	Media write protection switch or OS control	iDRAC-based format, local OS format, deleted, or card removed and formatted on a client