APPENDIX B

STRUCTURAL SKETCHES

LEGEND

- (X) SURVEY POINT (OUTERWORKS RETAINING WALL)
- (X) SURVEY POINT (FORTIFICATION WALLS)
- TP-X TEST PIT NUMBER

NOTES:

1. SEE SSK-1 FOR SITE PLAN WITH WALL CONDITIONS OBSERVED
2. SEE SSK-2 FOR FORTIFICATION WALL MEASURMENTS AND EVALUATION.
3. SEE SSK-3 FOR PARKING AREA RETAINING WALL MEASUREMENTS AND EVALUATION.
4. SEE SSK-4 & SSK-5 FOR WALL BEHAVIOR DIAGRAMS
5. SEE SSK-6 FOR REPRESENTATIVE WALL CONDITIONS.

NORTH

SITE PLAN: WALL PROFILE SURVEY LOCATIONS

MCC=1200
ARCHITECTURAL ENGINEERS, PLLC
210 N. Lee St., Suite 210
Alexandria, VA 22314
T: 703.350.4151

Project Title: FORT NEGLEY
1100 FORT NEGLEY BLVD.
NASHVILLE, TN 37203

Date: 8/26/2013
Scale: 1" = 50'
Project Number: 13-063

SSK-0

PRIORITIZED STABILIZATION AND REPAIR LEGEND

- TEMPORARY SHORING
- TEMPORARY BRACING
- GROUTED SOIL & MASONRY ANCHORS
- GROUTED SOIL & MASONRY ANCHORS AND/OR CONCRETE BUTTRESSES
- PARAPET RECONSTRUCTION
- WALL RECONSTRUCTION

EXISTING CONDITIONS LEGEND

B	BIOLOGICAL GROWTH
Bu	BULGE IN MASONRY
C	COLLAPSE (FULL HT.)
Cp	COLLAPSE (PARTIAL HT.)
Cd	CRACK (DIAGONAL)
Cv	CRACK (VERTICAL)
Cw	CAPSTONE WIDTH
D	DELAMINATION AND OR DISAGGREGATION OF STONE
DOS	DISPLACEMENT–SLIDING (OUT–OF–PLANE)
DOO	DISPLACEMENT–OVERTURNING (OUT–OF–PLANE)
DS	DISPLACEMENT–SETTLEMENT
△	WALL HINGE POINT
M	MORTAR PRESENT
SL	WALL CONSTRUCTION W/ LARGE STONE UNITS
Ss	WALL CONSTRUCTION W/ SMALL STONE UNITS
Sgt	SLOPED GRADE @ TOP
Sgb	SLOPED GRADE @ BASE
Tc	TOP COURSE SLIDING
✚	TEST PIT INDICATOR/NO.
Tr	TREE ROOT (EXISTING)
Tw	TREE GROWTH AGAINST WALL
V	VEGETATIVE GROWTH
Vd	VOIDS IN WALL
Wt	WALL THICKNESS
↑#	REPORT IMAGE REFERENCE

NORTH

EXISTING CONDITIONS & PRIORITIZED REPAIRS

210 N. Lee St., Suite 210
Alexandria, VA 22314
T: 703.350.4151

MCC=1200
ARCHITECTURAL ENGINEERS, PLLC

Title: SITE PLAN: EXISTING

Project Title: FORT NEGLEY
1100 FORT NEGLEY BLVD.
NASHVILLE, TN 37203

Date: 10/03/2013 (REV. 11/05/13)
Scale: 1" = 50'
Project Number: 13-063

SSK-1

FORT NEGLEY (NASHVILLE, TN) FORTIFICATION WALL PROFILE SURVEY

DESIGNATION	LOCATIONS	SEGMENT	MEASUREMENTS AND PLUMBNESS				GLOBAL PROFILE	INTERPRETATION	COMMENTS
			A	B	C	D	E		
			HEIGHT (FT)	TOP (IN)	MIDDLE (IN)	BOTTOM (IN)	(H:V)		
1	REDAN 5	WEST FACE	5.5	12	6	6	0.09	BULGE	
2	REDAN 5	CORNER	6	9	7.5	6.5	0.03	BATTER	TREE ROOT
3	REDAN 5	NORTH FACE	7.0833	14.5	9.5	10.5	0.05	BULGE	
4	REDAN 6	WEST FACE	5.5	12	11	10	0.03	BULGE	
5	REDAN 6	EAST FACE	7.583	21	13	10	0.12	BULGE	
6	REDAN 6	EAST FACE	4.375	14	13	12	0.04	BATTER	TREE ROOT
7	REDAN 7	NORTH FACE	5	11.5	12.25	11.5	0.00	BULGE	
8	REDAN 7	EAST FACE	4.833	9.75	12	11	−0.02	OUT−OF−PLANE	
9	REDAN 8	NORTH FACE	4.583	12.25	10.25	9.25	0.05	BATTER	
10	REDAN 8	NORTH FACE	6.2083	16	7.5	8	0.11	BULGE	
11	REDAN 8	SOUTH EAST CORNER	6.1667	13.5	9.5	5	0.11	BATTER	
12	EAST BASTION	EAST FACE	10	15	10.5	12.5	0.02	BULGE	SOUTH OF NORTH PARTIAL COLLAPSE
13	EAST BASTION	EAST FACE	9	13.5	11.5	11.5	0.02	BULGE	NORTH OF SOUTH PARTIAL COLLAPSE
14	EAST BASTION	EAST FACE	6	3.25	3.5	2.75	0.01	OUT−OF−PLANE	TEST PIT 1; 24" WIDE CAPSTONE; PLUMBNESS @ 2' AND 4' BELOW GRADE = 2" AND 3", RESPECTIVELY
15	EAST BASTION	SOUTH FACE	6.25	5.5	7	8.5	−0.04	OUT−OF−PLANE	TREE ROOT
16	EAST BASTION	SOUTH FACE	5.167	3.25	4.5	6.5	−0.05	OUT−OF−PLANE	17" WIDE CAPSTONE
17	SOUTH SCARP	EAST	10	10	8	8.5	0.01	BULGE	
18	SOUTH SCARP	CENTER	10	6.75	3.125	8.5	−0.01	BULGE	TEST PIT 2
19	SOUTH SCARP	WEST	10	13	8.5	9	0.03	BULGE	PLUMBNESS @ 2' ABOVE BOTTOM = 5.5"
20	WEST BASTION	EAST FACE	6.5	6.5	5.5	9	−0.03	OUT−OF−PLANE	
21	WEST BASTION	SOUTH FACE	6	7	8	9	−0.03	OUT−OF−PLANE	
22	WEST BASTION	SOUTH FACE	6.5	5.5	6	9.5	−0.05	OUT−OF−PLANE	
23	WEST BASTION	SOUTH FACE	7	6	10	14.5	−0.10	OUT−OF−PLANE	BULGE
24	WEST BASTION	CORNER	7.5	9	10	9.5	−0.01	BULGE	
25	WEST BASTION	WEST FACE	8.833	12	11.5	12	0.00	IN−PLANE	48" FROM INTERIOR AND EXTERIOR FACE (SEPARATION BETWEEN)
26	WEST BASTION	WEST FACE	9.5	5.5	6.5	14.5	−0.08	OUT−OF−PLANE	
27	REDAN 1	CORNER	6.5	12.5	9.5	9.5	0.04	BULGE	WALL THICKNESS: 48−53"
28	REDAN 2	WEST FACE	6.33	9	8	6.5	0.03	BATTER	
29	REDAN 2	NORTH CORNER	5.5	9	9.5	10	−0.02	OUT−OF−PLANE	
30	REDAN 3	WEST FACE	8.33	15	14	10.5	0.05	BATTER	
31	REDAN 3	NORTH FACE	8.33	16	11	10	0.06	BATTER	
32	REDAN 4	WEST FACE	5.5	12	7	7	0.08	OUT−OF−PLANE	
33	REDAN 4	NORTH FACE	4.75	7.5	5	3.5	0.07	OUT−OF−PLANE	
34	NORTH SCARP	WEST	7	13	12.5	9.5	0.04	BATTER	
35	NORTH SCARP	CENTER	6.33	9.5	9.5	9.5	0.00	IN−PLANE	
36	NORTH SCARP	EAST	5.5	12	6	6	0.09	OUT−OF−PLANE	
37	GATE WALL	WEST FACE	8.833	11	8	9.5	0.01	BULGE	8' FROM NORTH CORNER; 44" THICKNESS @ TOP
38	SALLY PORT EAST	EAST FACE	6.67	14	13.5	14.5	−0.01	IN−PLANE	
39	SALLY PORT EAST	EAST FACE	6.5	15.5	12.5	15	0.01	BULGE	
40	SALLY PORT EAST	EAST FACE	7.5	12	11.5	10.5	0.02	OUT−OF−PLANE	
41	SALLY PORT EAST	WEST FACE	4.167	7	7	7	0.00	IN−PLANE	
42	SALLY PORT EAST	WEST FACE	6.1667	5	5.5	5	0.00	IN−PLANE	
43	SALLY PORT EAST	WEST FACE	6.1667	12	10.5	12.5	−0.01	BULGE	

NOTES:

1. MEASUREMENTS TAKEN FROM TOE−SIDE (EXTERIOR FACE) OF FORTIFICATION WALLS IN A COUNTER−CLOCKWISE DIRECTION WITH PLUM−BOB AND MEASURING TAPE.
2. SEGMENT LOCATION BASED ON VIEW LOOKING INTO FORTIFICATION.
3. WALLS CONSTRUCTED OF UNREINFORCED STONE MASONRY LAID WITHOUT MORTAR OR GROUT (DRY−STACKED)
4. WALLS ORIGINALLY CONSTRUCTED IN 1862 (U.S. ARMY); LOCALLY RECONSTRUCTED IN 1935 BY WPA AND LOCALLY REPAIRED IN 1999 BY CITY OF NASHVILLE.
5. MEASUREMENTS TAKEN ON JUNE 19, 2013 BY 1200 ARCHITECTURAL ENGINEERS, PLLC
6. SEE DETAILS FOR GRAPHIC REPRESENTATION OF WALL MEASUREMENTS, NOMENCLATURE AND BEHAVIOR

Title: FORTIFICATION WALL MEASUREMENTS & NOTES

MCC=1200
ARCHITECTURAL ENGINEERS, PLLC
210 N. Lee St., Suite 210
Alexandria, VA 22314
T: 703.350.4151

Project Title: FORT NEGLEY
1100 FORT NEGLEY BLVD.
NASHVILLE, TN 37203

Date: 08/26/2013 (REV. 11/05/13)
Scale: N.T.S.
Project Number: 13-063

SSK-2

FORT NEGLEY (NASHVILLE, TN) PARKING AREA RETAINING WALL PROFILE SURVEY

DESIGNATION	LOCATION	SEGMENT	MEASUREMENTS (HEIGHT AND GEOMETRY)						MEASUREMENTS (PLUMBNESS)					PARAPET DISPLACEMENT	LOWER WALL	INTERPRETATION	COMMENTS
			A	B	C	Cw	D	E	F	G	H	I	J	K	L		
			T.O. PARAPET – INT. GRADE (FT)	T.O. PARAPET – EXT. GRADE (FT)	T.O. PARAPET – T.O. LOW WALL (FT)	CAPSTONE WIDTH (IN)	PARAPET THICKNESS (IN)	LEDGE WIDTH (IN)	TOP (IN)	INT. GRADE	INT. FACE OF LEDGE (IN)	MIDDLE (IN)	BOTTOM (IN)	OUT-OF-PLANE (IN)	PROFILE (H:V)		
1	WEST WALL	SOUTH	3.25	4.5	4.083	31	27	7	24		13.5	3.5	5.5	10.50	0.20	BULGE	VERTICAL CRACK
2	WEST WALL	NORTH	2.833	7.67	3.75	31	27	5	18		8	2.5	4.5	10.00	–0.03	OUT-OF-PLANE	5' COLLAPSED SECTION AT CORNER
3	NW WALL	WEST	2.75	9	2.75	31	27	7	7	10	NR	NR	NR	3.00			12' COLLAPSED SECTION AT CORNER, VERTICAL CRACK; TREE IN CONTACT WITH LOWER WALL
4	NW WALL	CENTER	2.9167	8.25	3.833	31	27	NR	4	10	NR	NR	NR	6.00			BUTTRESS @ LOWER WALL, HINGE POINT, DIAGONAL CRACK
5	NW WALL	EAST	3.5	OBSTRUCTION	3.583	31	27	NR	9.5	9.5	NR	NR	NR	0.00			DEBRIS MOUND AT EXT. GRADE, 12" WEEP
6	NE WALL	WEST	2.833	6.67*	3.75	31	27	NR	7.5	9.5	NR	NR	NR	2.00			2–3 FEET DEBRIS AT EXT. GRADE; VERTICAL CRACK; TREE IN CONTACT WITH LOWER WALL; BUTTRESS
7	NE WALL	CENTER	2.833	OBSTRUCTION	3.75	31	27	7	26		16.75	10.75	13.75	9.25		OUT-OF-PLANE	DEBRIS MOUND AT EXT. GRADE, BUTTRESS
8	NE WALL	EAST	2.5	9.75	3.75	31	27	5.5	23		16.5	9	12	6.50	–0.01	BULGE	TREE IN CONTACT WITH LOWER WALL; BUTTRESS; HINGE POINT; VERTICAL CRACK; PARTIAL COLLAPSE
9	EAST WALL	NORTH	2.5	7	3.583	34	30	6									PARTIAL COLLAPSE; DIAGONAL CRACK
10	EAST WALL	SOUTH	2.75	3.833	3.833	34	30	6									PARTIAL COLLAPSE; DIAGONAL CRACK
				* HEIGHT TO TOP OF DEBRIS													

NOTES:

1. MEASUREMENTS TAKEN OF TOE-SIDE (EXTERIOR SIDE) OF RETAINING WALL (WHERE ACCESSIBLE) WITH PLUMMET AND MEASURING TAPE.
2. UPPER WALL (PARAPET) CONSTRUCTED OF UNREINFORCED STONE MASONRY LAID IN MORTAR/GROUT. LOWER WALL CONSTRUCTED OF UNREINFORCED STONE MASONRY WITHOUT MORTAR (DRY-STACKED)
3. ~20' LINEAR FEET OF UPPER WALL COLLAPSE AT NORTHWEST CORNER; PARTIAL COLLAPSE AT EAST SIDE WALL
4. NR = NOT RECORDED (INACCESSIBLE AREA); OBSTRUCTION = DEBRIS PILE AT EXTERIOR FACE OF RETAINING WALL
5. CONCRETE BUTTRESSES CONSTRUCTED AT (4) LOCATIONS ALONG LOWER WALL. BUTTRESSES TYPICALLY 5' (LONG) X1'–6" (WIDE) PLAN DIMENSION AT TOP AND 5'X4'–6" AT BASE.

Title: PARKING AREA RETAINING WALL MEASUREMENTS & NOTES

MCC=1200
ARCHITECTURAL ENGINEERS, PLLC
210 N. Lee St., Suite 210
Alexandria, VA 22314
T: 703.350.4151

Project Title: FORT NEGLEY
1100 FORT NEGLEY BLVD.
NASHVILLE, TN 37203

Date: 08/26/2013
Scale: N.T.S.
Project Number: 13-063

SSK-3

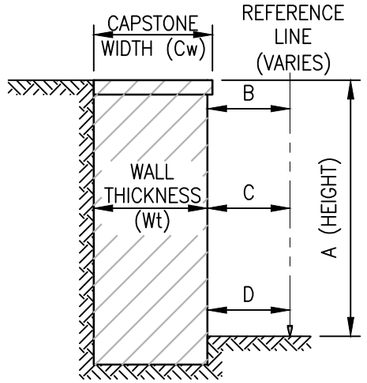

1 SSK-4 **SURVEY NOMENCLATURE**
SCALE: 3/16" = 1'-0"

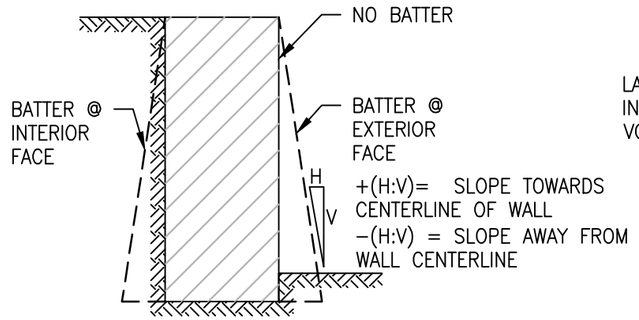

2 SSK-4 **WALL PROFILE: BATTER**
SCALE: 3/16" = 1'-0"

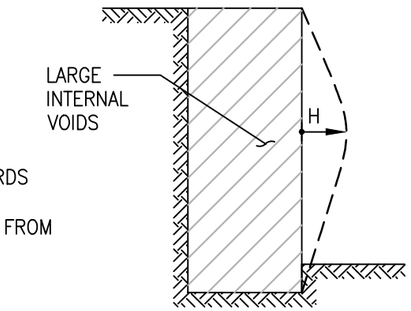

3 SSK-4 **WALL PROFILE: BULGE**
SCALE: 3/16" = 1'-0"

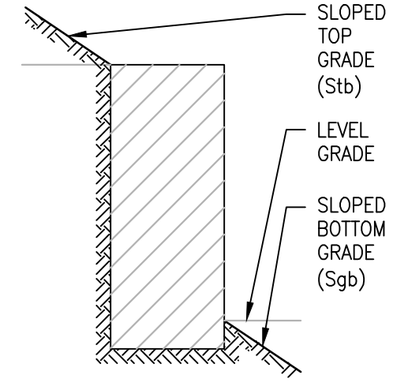

4 SSK-4 **SLOPED GRADES**
SCALE: 3/16" = 1'-0"

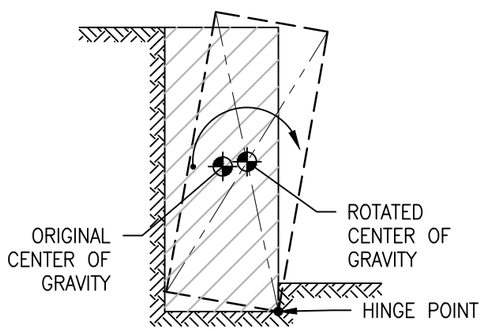

5 SSK-4 **OUT-OF-PLANE DISPLACEMENT ROTATION (OVERTURNING)**
SCALE: 3/16" = 1'-0"

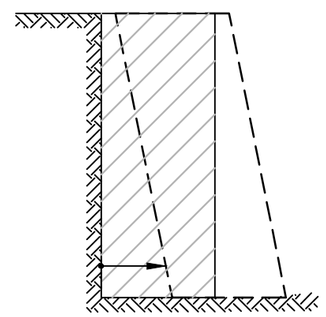

6 SSK-4 **OUT-OF-PLANE DISPLACEMENT MOVEMENT (SLIDING)**
SCALE: 3/16" = 1'-0"

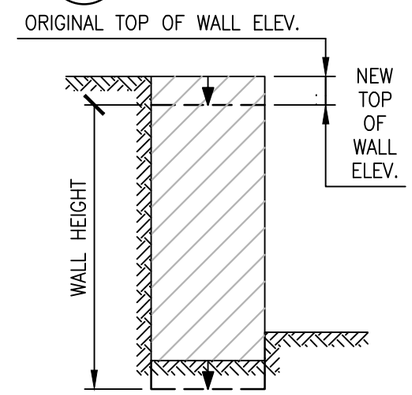

7 SSK-4 **IN-PLANE DISPLACEMENT (VERTICAL SETTLEMENT)**
SCALE: 3/16" = 1'-0"

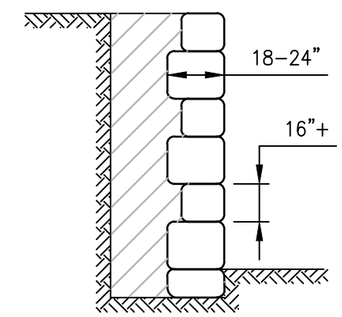

8 SSK-4 **WALL CONSTRUCTION W/ LARGE STONES**
SCALE: 3/16" = 1'-0"

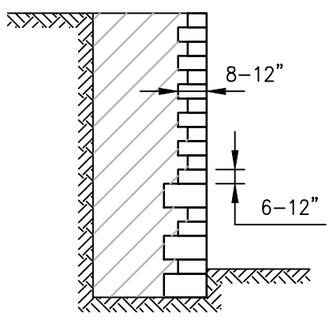

9 SSK-4 **WALL CONSTRUCTION W/ SMALL STONES**
SCALE: 3/16" = 1'-0"

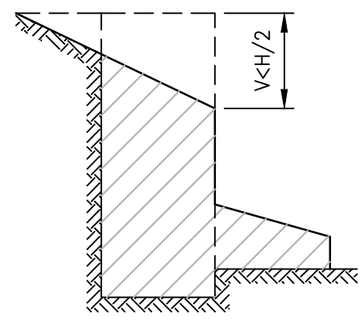

10 SSK-4 **COLLAPSE (PARTIAL HT.)**
SCALE: 3/16" = 1'-0"

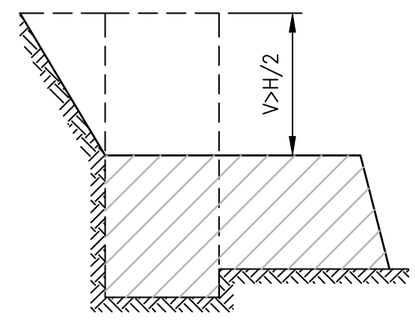

11 SSK-4 **COLLAPSE (FULL HT.)**
SCALE: 3/16" = 1'-0"

Title: WALL CONDITIONS AND BEHAVIOR DIAGRAMS

MCC=1200
ARCHITECTURAL ENGINEERS, PLLC
210 N. Lee St., Suite 210
Alexandria, VA 22314
T: 703.350.4151

Project Title: FORT NEGLEY
1100 FORT NEGLEY BLVD.
NASHVILLE, TN 37203

Date: 08/26/2013 (REV. 11/05/13)
Scale: 3/16" = 1'-0"
Project Number: 13-063

SSK-4

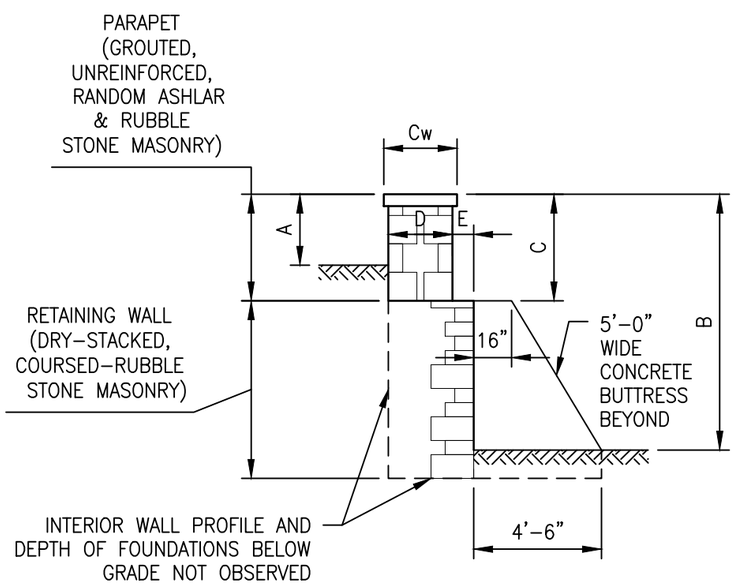

DETAIL A: GEOMETRY

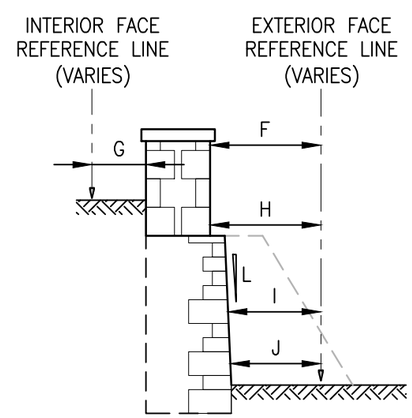

BATTER PROFILE (L) NOTES:

+(H:V)= SLOPE TOWARDS CENTERLINE OF WALL (AS SHOWN IN DIAGRAM)

−(H:V) = SLOPE AWAY FROM WALL CENTERLINE

DETAIL B: PLUMBNESS & PROFILE

1 SSK-5 WALL SECTIONS W/ MEASURMEMENT NOMENCLATURE

SCALE: 3/16" = 1'-0"

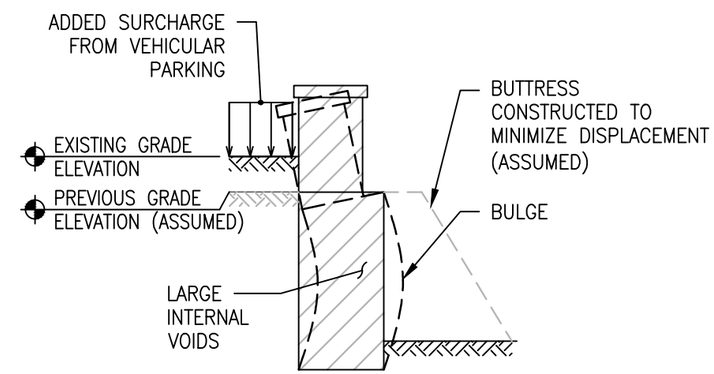

DETAIL A: OUT-OF-PLANE DISPLACEMENT (WALL BULGE WITH INTERNAL VOIDS)

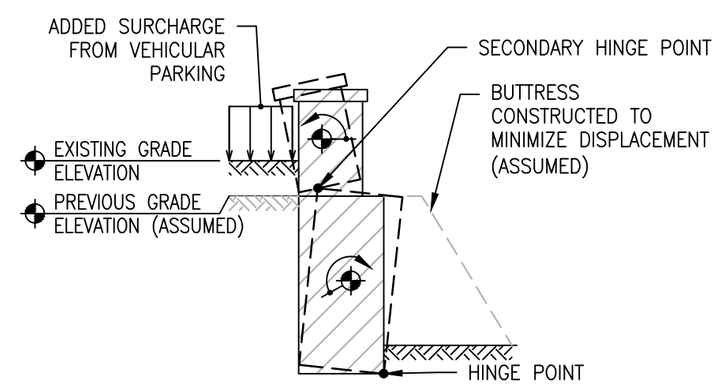

DETAIL B: OUT-OF-PLANE ROTATION (OVERTURNING)

2 SSK-5 WALL BEHAVIOR & OBSERVED DISPLACEMENT

SCALE: 3/16" = 1'-0"

Title: PARKING AREA RETAINING WALL MEASUREMENTS & NOTES

MCC=1200
ARCHITECTURAL ENGINEERS, PLLC
210 N. Lee St., Suite 210
Alexandria, VA 22314
T: 703.350.4151

Project Title: FORT NEGLEY
1100 FORT NEGLEY BLVD.
NASHVILLE, TN 37203

Date: 08/26/2013

Scale: VARIES

Project Number: 13-063

SSK-5

1 SSK-6 HAIRLINE @ STACKED COURSE
SCALE: N.T.S.

2 SSK-6 VERTICAL CRACK BELOW JOINT
SCALE: N.T.S.

3 SSK-6 SPALLING & DELAMINATION
SCALE: N.T.S.

DELAMINATION OF SEDIMENTARY STONES WITH CLAY-RICH LAYERS DUE TO WEATHERING. EXFOLIATION OCCURS DUE TO EXPANSION AND CONTRACTION OF TRAPPED MOISTURE.

4 SSK-6 HEAVY DELAMINATION
SCALE: N.T.S.

5 SSK-6 STONE LOSS/DELAMINATION
SCALE: N.T.S.

VEGETATION GROWTH WITHIN STONE JOINTS AND CRACKS DUE TO LIMITED MAINTENANCE.

BIOLOGICAL GROWTH FORMS ON SURFACE, AT AREAS OF DELAMINATION, AND WITHIN HAIRLINE FISSURES

6 SSK-6 VEGETATIVE & BIO GROWTH
SCALE: N.T.S.

STONE W/ VERTICAL CRACK DUE TO SHEAR FAILURE. STONE FORCED TO SPAN W/ LOSS OF SUPPORT BELOW

STONE DELAMINATION & LOSS, SEE 5/SSK-6.

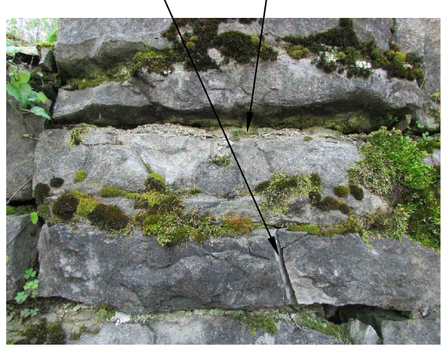

7 SSK-6 BIOLOGICAL GROWTH
SCALE: N.T.S.

2 SSK-6 1 SSK-6 6 SSK-6

LOCALIZED MORTARED JOINTS

VOIDS

DISPLACEMENT (SLIDING)

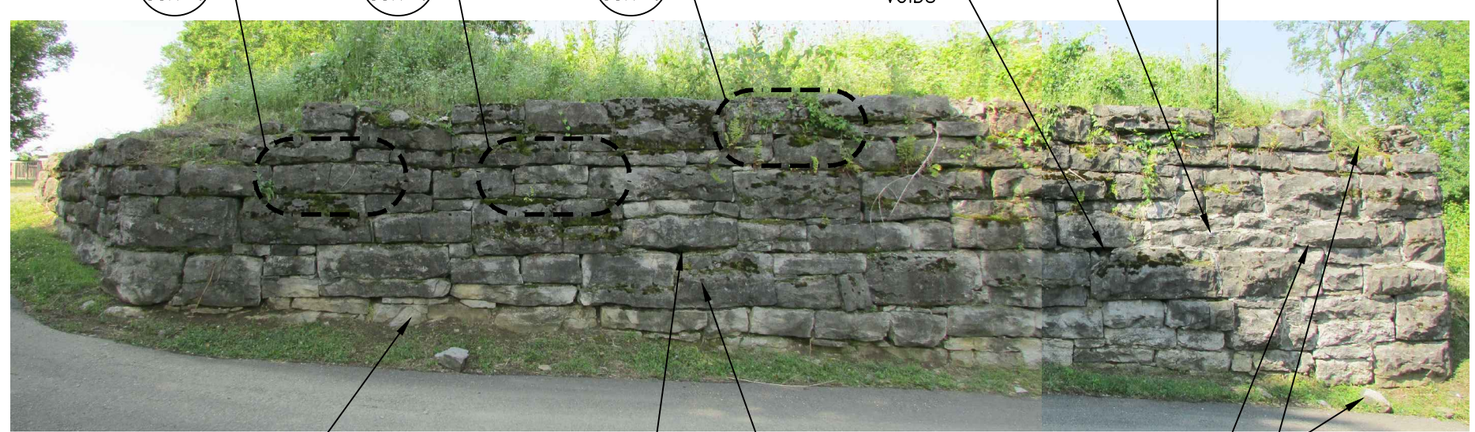

STONE DELAMINATION

LOSS OF STONE

LARGE STONE UNITS

DIAGONAL CRACK

DISLODGED STONE FROM TOP OF WALL

8 SSK-6 REPRESENTATIVE WALL ELEVATION
SCALE: N.T.S.

Title: REPRESENTATIVE WALL ELEVATION AND CONDITIONS

MCC=1200
ARCHITECTURAL ENGINEERS, PLLC
210 N. Lee St., Suite 210
Alexandria, VA 22314
T: 703.350.4151

Project Title: FORT NEGLEY
1100 FORT NEGLEY BLVD.
NASHVILLE, TN 37203

Date: 08/26/2013
Scale: N.T.S.
Project Number: 13-063

SSK-6