ACTIVITY: Temporary Diversions, Drains and Swales

TCP – 22

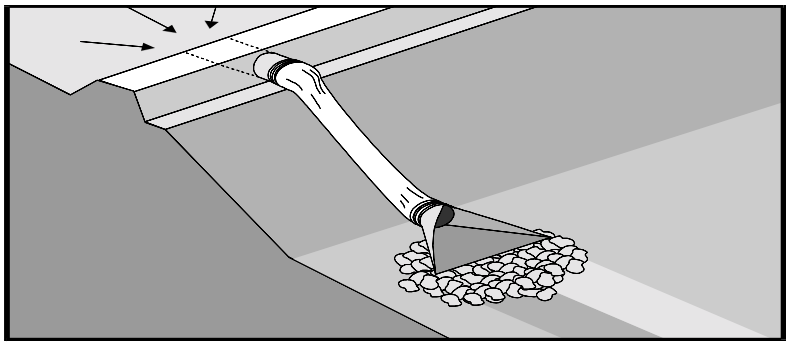

Targeted Constituents				
● Significant Impact		◗ Partial Impact		○ Low or Unknown Impact
● Sediment	○ Heavy Metals	○ Floatable Materials	○ Oxygen Demanding Substances	
○ Nutrients	○ Toxic Materials	○ Oil & Grease	○ Bacteria & Viruses	○ Construction Wastes

Implementation Requirements				
● High		◗ Medium		○ Low
◗ Capital Costs	○ O & M Costs	○ Maintenance	◗ Suitability for Slopes >5%	○ Training

Description

Temporary drains and swales are used to divert off-site runoff around the construction site, divert runoff from stabilized areas around disturbed areas, and direct runoff into sediment basins or traps. The primary function of a slope drain is to convey runoff down cut or fill slopes, while the primary function of a subsurface drain is to drain excessive soil saturation in sloping areas. The primary function of top and toe of slope diversion swales, ditches, and berms is to minimize sheet flow over slope surfaces and reduce sedimentation by conveying collected runoff to a protected drainage system. This management practice is likely to create a significant reduction in sediment.

Suitable Applications

Temporary drains and swales are appropriate for diverting any upslope runoff around unstabilized or disturbed areas of the construction site. In this regard, they divert or bypass disturbed or sensitive areas and convey to stable or protected areas or the permanent infrastructure.

Drains

- Sensitive areas may include material storage areas, equipment fueling and maintenance areas, and any other area where the runoff may become contaminated.
- Prevent slope failures.
- Prevent damage to adjacent property.
- Prevents erosion and sediment transport into waterways.
- Diverts sediment-laden runoff into sediment basins or traps.
- Removes excess water from the soil (subsurface drains).

Diversions

- Where runoff must be intercepted at the bottom of an undisturbed slope prior to entering a denuded area.
- Where needed to direct runoff to a stable conveyance, such as a slope drain.
- Where needed to direct runoff to a sediment trapping device.
- Where needed to intercept runoff and direct it around the site.
- Below steep grades where runoff begins to concentrate, but prior to where there is potential for rill and gulley erosion.
- Where runoff must be prevented from flowing over a disturbed slope.

Installation/ Application Criteria

A diversion does not itself control erosion or remove sediment from runoff; it prevents erosion by directing runoff to an erosion control device such as a sediment trap or directing runoff away from an erodible area. Temporary diversions should not adversely impact adjacent properties and must conform to local floodplain management regulations, and should not be used in areas with slopes steeper than 10%. The advantages of the temporary earth dike include the ability to handle flows from large tributary areas. Once stabilized, diversions require relatively little maintenance. Additionally, they are relatively inexpensive to install since the soil material required for construction may be available on-site, and can be constructed as part of the initial grading operations, while the equipment is on-site.

Temporary swales will effectively convey runoff and avoid erosion if constructed and maintained properly:

- Size temporary swales in the same manner as a permanent channel.
- A permanent channel must be designed by a licensed professional civil engineer.
- At a minimum, the swale should conform to predevelopment flow patterns and capacities.
- Construct the swale with an uninterrupted, positive grade to a stabilized outlet.

Drains

Diversion drains are only effective if they are properly installed. Swales are more effective than dikes because they tend to be more stable. The combination of a swale with a dike on the downhill side is the most cost-effective diversion.

- Can be placed on or buried underneath the slope surface.
- Should be anchored at regular intervals of 50 to 100 ft. (15.2 to 30.5 m).
- If a slope drain conveys sediment-laden water, direct flows to a sediment trap or basin.

- When using slope drains, limit tributary area to 2 acres (0.8 ha) per pipe. For larger areas, use a rock-lined channel or a series of pipes.

- Maximum slope generally limited to 2:1 (H:V), as energy dissipation below steeper slopes is difficult.

- Drain or swale should be laid at a grade of at least 1 percent, but not more than 15 percent.

- The swale must not be overtopped by the 10-year, 24-hour storm, meeting or exceeding the design criteria stated above.

- Remove all trees, stumps, obstructions, and other objectionable material from the swale when it is built.

- Compact any fill material along the path of the swale.

- Stabilize all swales immediately. Seed and mulch swales at a slope of less than 5 percent, and use rip-rap or sod for swales with a slope between 5 and 15 percent.

- Do not operate construction vehicles across a swale unless a stabilized crossing is provided.

- Direct surface runoff to slope drains with diversion swales, dikes and berms.

- When installing slope drains:
  - Install slope drains perpendicular to slope contours.
  - Compact soil around and under entrance, outlet, and length of pipe.
  - Securely anchor and stabilize pipe and appurtenances into soil.
  - Check to ensure that pipe connections are watertight.
  - Protect inlet and outlet of slope drains: use standard flared end section at entrance for pipe slope drains 12 in. (300 mm) and larger.
  - Protect area around inlet with filter cloth.
  - Protect outlet with geosynethics and rip-rap or other energy dissipation device. For high-energy discharges, reinforce rip-rap with concrete or use reinforced concrete devices.

- When installing subsurface drains:
  - Slightly slope subsurface drain towards outlet.
  - Check to ensure that pipe connections are watertight.
  - Review relative size of soil and slot/perforation size in the pipe to prevent sediment from entering pipe.
  - Relief drains lower groundwater table. Install parallel to slope and drain to side of slope. Use gridiron, herringbone or random pattern.
  - Interceptor drains prevent excessive soil saturation on sensitive slopes. Install perpendicular to slope and divert discharge to the side of the slope.

Diversions

- Select design flows and safety factor based on careful evaluation of risks due to

erosion of the measure, over topping, flow backups, or washout.

- High flow velocities may require the use of a lined ditch, or other methods of stabilization.

- When installing diversion ditches and berms:
  - Protect outlets from erosion.
  - Utilize planned permanent ditches/berms early in construction phase when practicable.

- All dikes and berms should be compacted by earth-moving equipment.

- All dikes should have positive flow to a stabilized outlet.

- Top width may be wider and side slopes may be flatter at crossings for construction traffic.

- Dikes should direct sediment-laden runoff into a sediment trapping device.

- Dikes should be stabilized with vegetation, chemicals, or physical devices.

- Compact any fills to prevent unequal settlement.

- Dikes should remain in place until disturbed areas are permanently stabilized.

- Examine the site for run-on from off-site sources (control off-site flows through or around site).

- Select flow velocity limit based on soil types and drainage flow patterns for each project site.

- Establish a maximum flow velocity, shear stress or 3-5 ft/s (0.91-1.5 m/s), for using earth dikes and swales, above which a lined ditch must be used.

- Design an emergency overflow section or bypass area for larger storms that exceed the 10-year design storm.

- Conveyances must be lined or reinforced when velocities exceed allowable limits for soil. Consider use of geotextiles, engineering fabric, vegetation, rip-rap or concrete.

Maintenance

- Inspect drains before and after each rainstorm, and weekly until the tributary drainage area has been stabilized. Follow routine inspection procedures for inlets thereafter.

- Inspect outlet for erosion and downstream scour. If eroded, repair damage and install additional energy dissipation measures. If downstream scour is occurring, it may be necessary to reduce flows being discharged into the channel unless other preventative measures are implemented.

- Inspect slope for accumulations of debris and sediment.

- Remove built-up sediment from entrances and outlets as required. Flush drains if necessary; capture and settle out sediment from discharge.
- Make sure water is not ponding in active or sensitive areas (e.g., active traffic lanes, material storage areas, etc.).
- Inspect temporary diversions weekly and after rainfall events.
- Inspect ditches and berms for washouts. Replace lost rip-rap, damaged linings or soil stabilizers as needed.
- Inspect ditches and berms for accumulation of debris and sediment. Remove debris and sediment as needed.
- Inspect the channel lining, embankments, and bed for erosion and accumulating debris and sediment build up. Remove sediment and debris and repair linings and embankment as required.
- Temporary conveyances should be completely removed as soon as the surrounding area has been stabilized, or at the completion of construction.
- Inspect permanent measures every other week and after rainfall events throughout construction.

Limitations

- Dikes or berms should not be used for drainage areas greater than 5 acres (2 ha), or along slopes greater than 10 percent. For larger areas more permanent structures should be built.
- Earth dikes may create more disturbed area on site and become barriers to construction equipment.
- Earth dikes must be stabilized immediately, which adds cost and maintenance concerns.
- Diverted stormwater may cause downstream flood damage if not properly and evenly distributed.
- Temporary drains and swales or any other diversion of runoff should not adversely impact upstream or downstream properties.
- Temporary drains and swales must conform to local floodplain management requirements.
- Subsurface drains may remove fine soils which can result in collapse of the slope.
- Severe erosion may result when slope drains fail by over topping, piping in surrounding uncompacted soil, or pipe separation.
- Ditches/berms are not sediment trapping devices if they simply divert flow to a sufficiently sized drain. They can trap sediment if flow is permitted to slow

enough for sediment deposition. See TCP-12 Check Dams, TCP-15 Sand Bag Barrier and TCP-16 Brush or Rock Filters and Continuous Berms.

- Dikes should not be constructed of soils which may be easily eroded such as sand, gravels, or loosely consolidated silts or clay.
- Regrading the site to remove the dike may add additional cost.
- Must use a lined ditch for high flow velocities.
- Care must be applied to correctly size and locate earth dikes, swales and lined ditches. Excessively steep, unlined dikes and swales are subject to erosion and gully formation.
- Unstabilized tributary areas will reduce the effectiveness of these measures.
- These measures may cause water to pond onto inappropriate areas (e.g., active traffic lanes, material storage areas, etc.) if not properly sized.
- Altering existing waterways or clearing existing vegetation may require permits from the U.S. Army Corps of Engineers and/or TDEC.

Additional Information

Slopes that are formed during cut and fill operations should be protected from erosion by runoff. A combination of a temporary swale and diversions at the top of a slope can safely divert runoff to a location where it can safely be brought to the bottom of the slope. A combination dike and swale is easily constructed by a single pass of a bulldozer or grader and compacted by a second pass of the tracks or wheels over the ridge. Diversion structures should be installed when the site is initially graded, and remain in place until post-construction BMPs are installed and/or the slopes are stabilized.

Diversion practices concentrate the volume of surface runoff, increasing its velocity and erosive force. Thus, the flow out of the drain or swale must be directed onto a stabilized area or into a grade stabilization structure. A swale should be stabilized using vegetation, chemical treatment, rock rip-rap, matting, or other physical means of stabilization, if significant erosion will occur. Any drain or swale which conveys sediment-laden runoff must be diverted into a sediment basin or trap before it is discharged from the site.

Primary References

California Storm Water Best Management Practice Handbooks, Construction Handbook, CDM et.al. for the California SWQTF, 1993.

Caltrans Storm Water Quality Handbooks, CDM et.al. for the California Department of Transportation, 1997.

Subordinate References

Best Management Practices and Erosion Control Manual for Construction Sites, Flood Control District of Maricopa County, Arizona, September 1992.

"Draft – Sedimentation and Erosion Control, An Inventory of Current Practices", U.S.E.P.A., April, 1990.

Manual of Standards of Erosion and Sediment Control Measures, Association of Bay Area Governments, June 1981.

Stormwater Management Water for the Puget Sound Basin, Washington State Department of Ecology, The Technical Manual – February 1992, Publication #91-75.

Water Quality Management Plan for the Lake Tahoe Region, Volume II, Handbook of Management Practices, Tahoe Regional Planning Agency – November 1988.

Inspection Checklist

- Are all drain outlets protected from scour and general erosion?
- Is there any evidence of soil piping in any area to be protected by a diversion?
- Are drains sized to handle all the flow from the "diverted" area under a 10-year storm event?
- Are inlets protected and/or flared for pipes larger than 12-inches (30.5 cm)?
- Are all slope drains directed straight down slope (perpendicular to contours)?
- Are all dikes and berms properly compacted?
- Are any level spreaders offering protection or are there downstream energy dissipaters?
- Are all drains securely fastened/anchored to the slope at intervals not greater than every 50 or 100 ft. (15.2 or 30.5 m)?
- Are there any indications of erosion, underwash, or sediment transport that are not expected and treated by a sediment trap or basin?

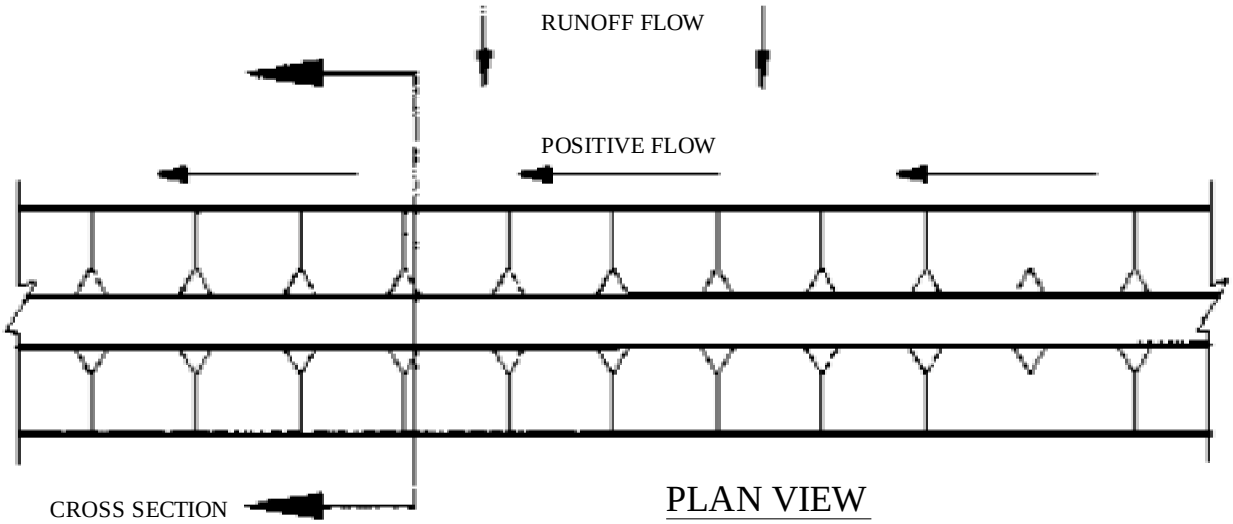

PLAN VIEW
N.T.S.

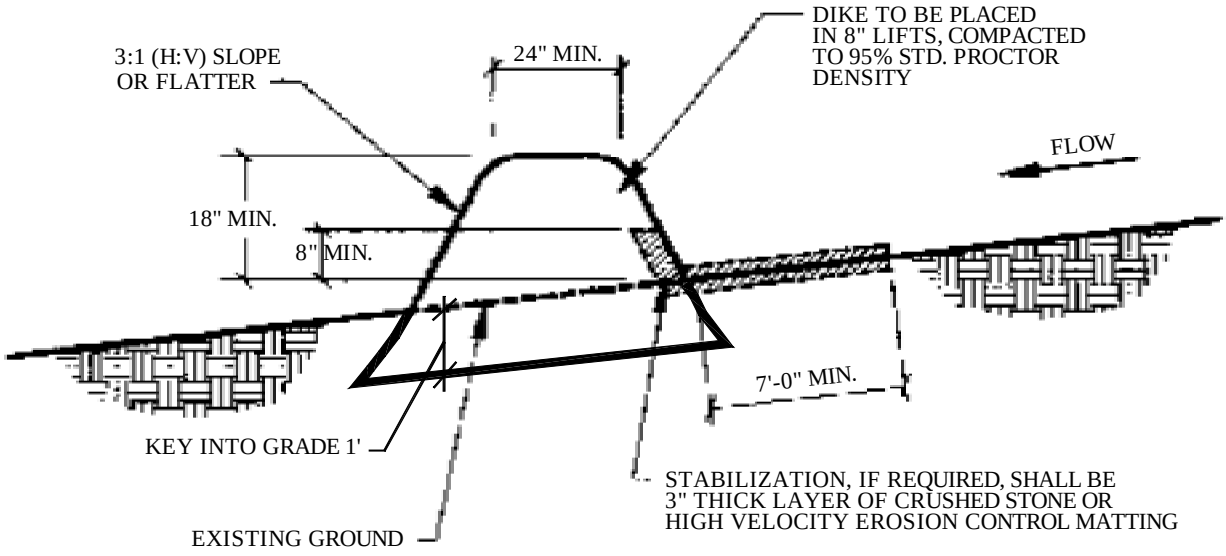

Note: This technique is similar to methods presented in TCP-15: Sand Bag Barrier and TCP-16: Brush or Rock Filters and Continuous Berms.

CROSS SECTION
N.T.S.

Figure TCP-22-1
Diversion Dike w/o Excavation

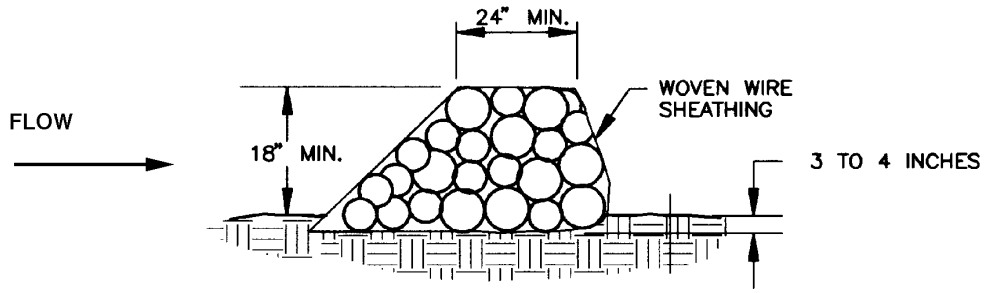

CROSS SECTION

N.T.S.

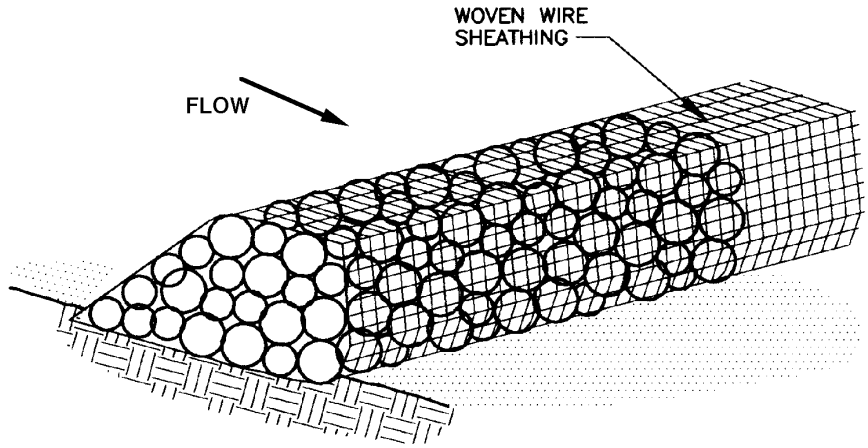

ISOMETRIC PLAN VIEW

N.T.S.

Note: This technique is similar to methods presented in TCP-15: Sand Bag Barrier and TCP-16: Brush or Rock Filters and Continuous Berms.

Figure TCP-22-2
Rock Berm

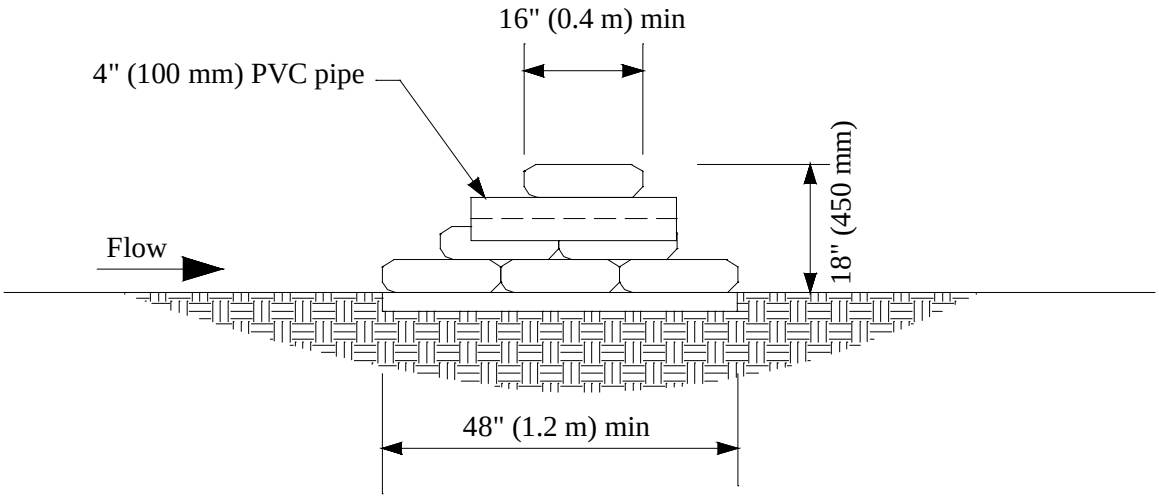

CROSS SECTION

N.T.S.

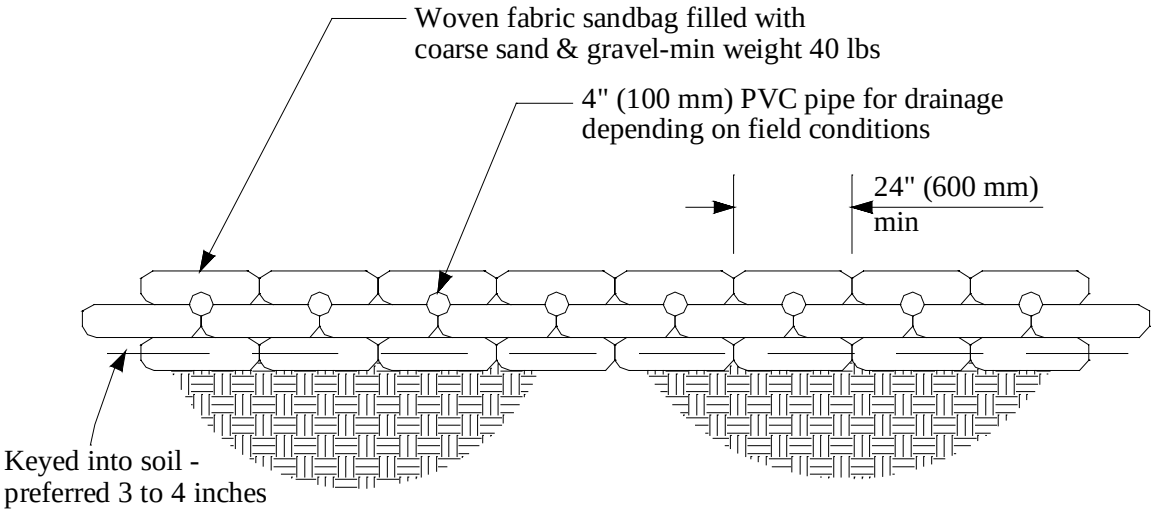

PROFILE VIEW

N.T.S.

Figure TCP-22-3
Sand Bag Berm

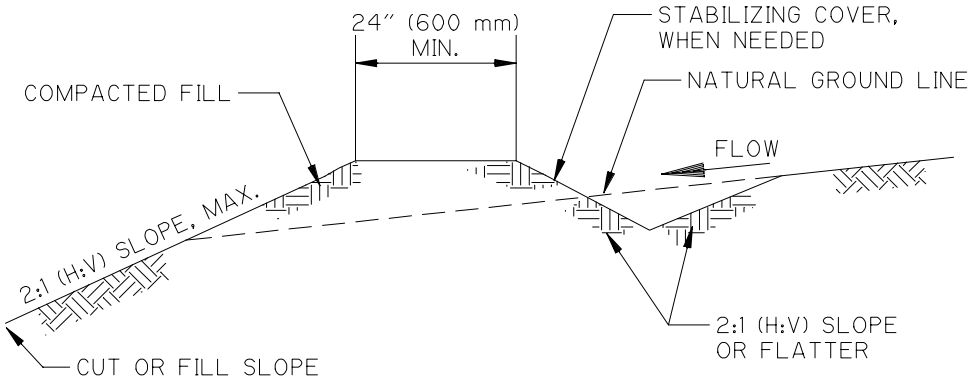

DIVERSION BERM/SWALE

N.T.S.

NOTES:
1. STABILIZE INLET, OUTLETS AND SLOPES.
2. PROPERLY COMPACT THE SUBGRADE.

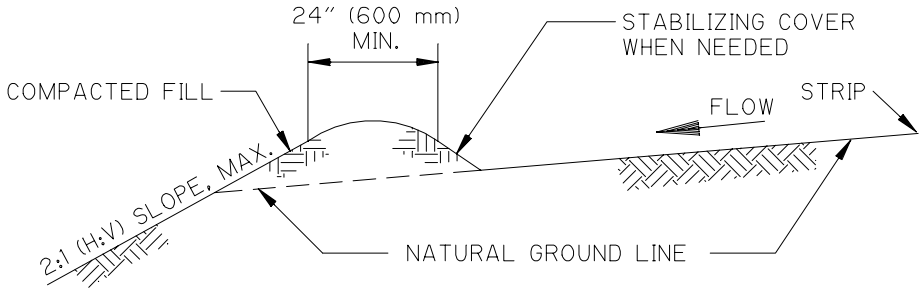

DIVERSION BERM

N.T.S.

Figure TCP-22-4
Diversion Berm and Berm/Swale

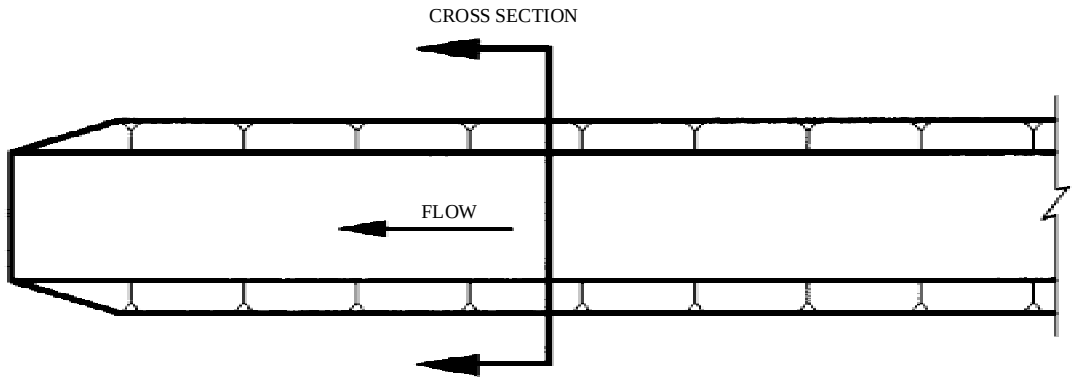

PLAN VIEW
N.T.S.

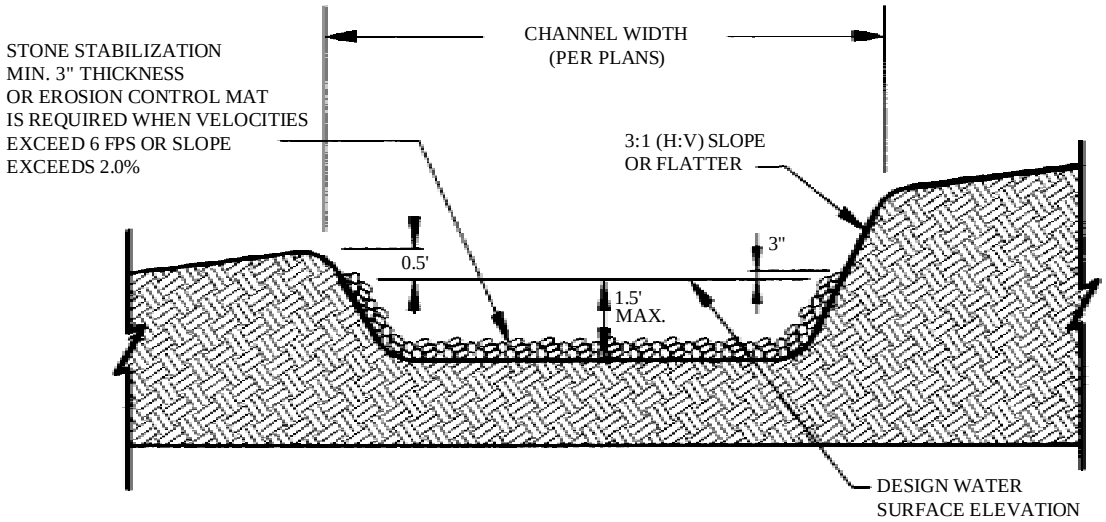

CROSS SECTION
N.T.S.

Figure TCP-22-5
Interceptor swale

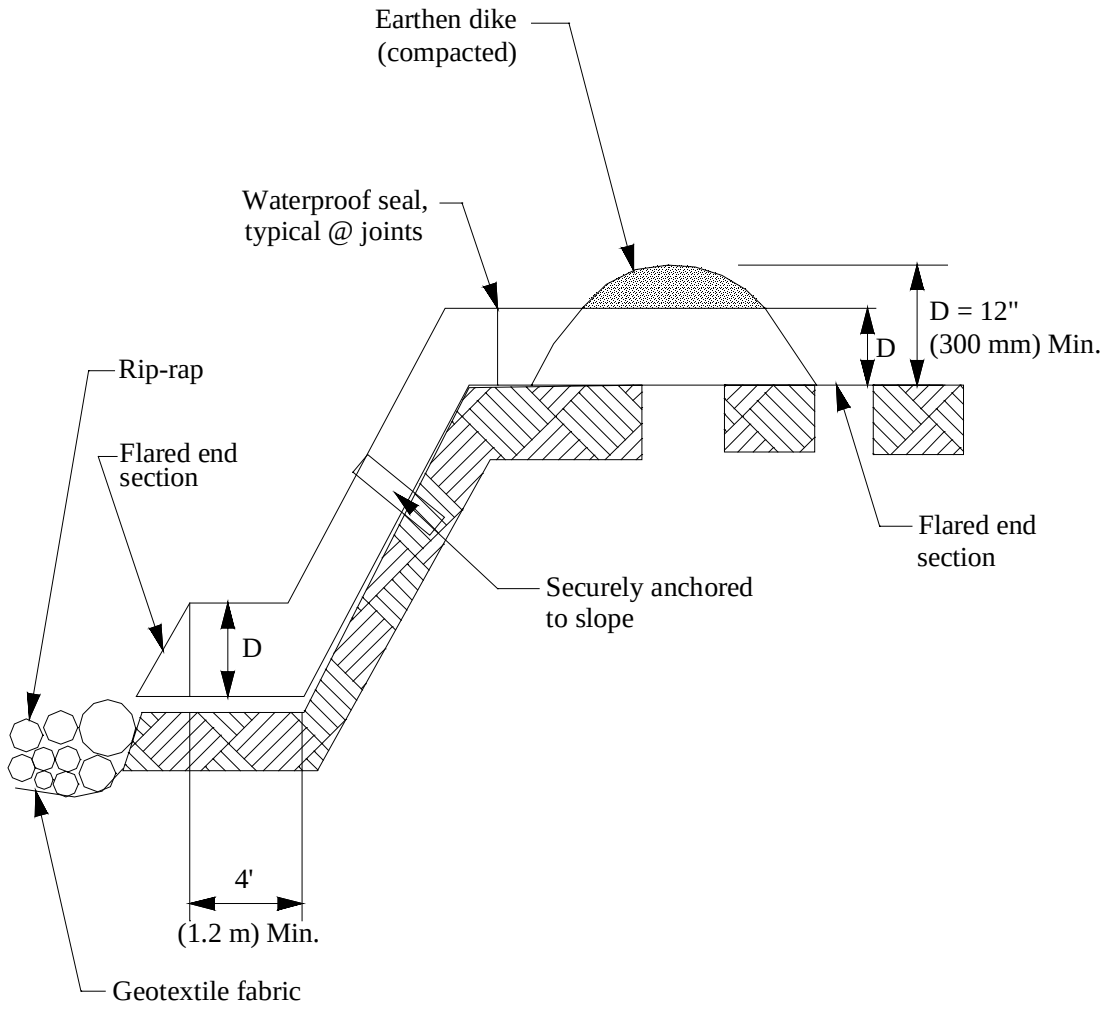

Figure TCP-22-6
Diverted Flow Slope Drain

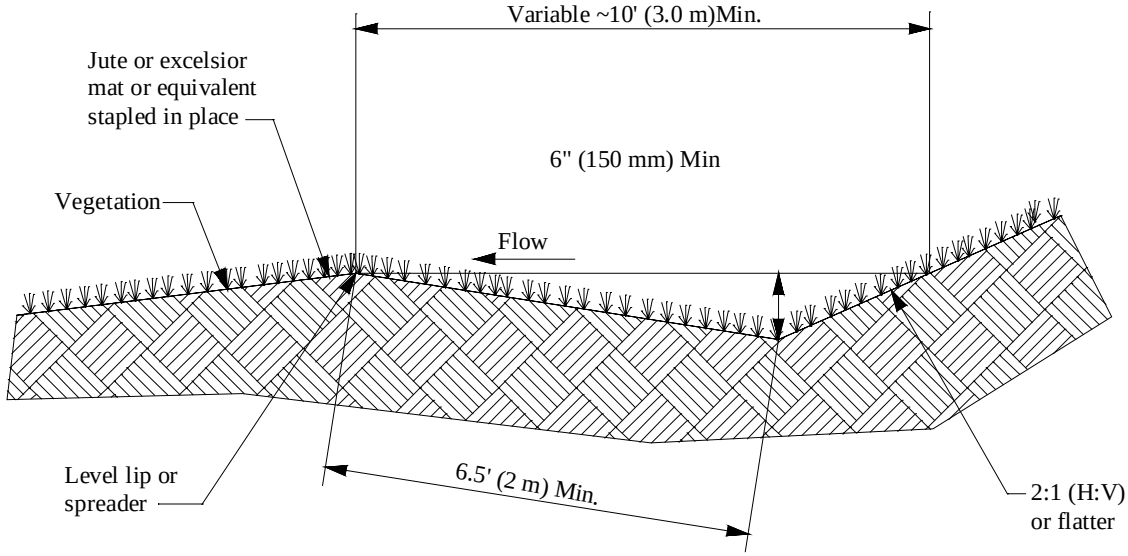

VEGETATED LIP

N.T.S.

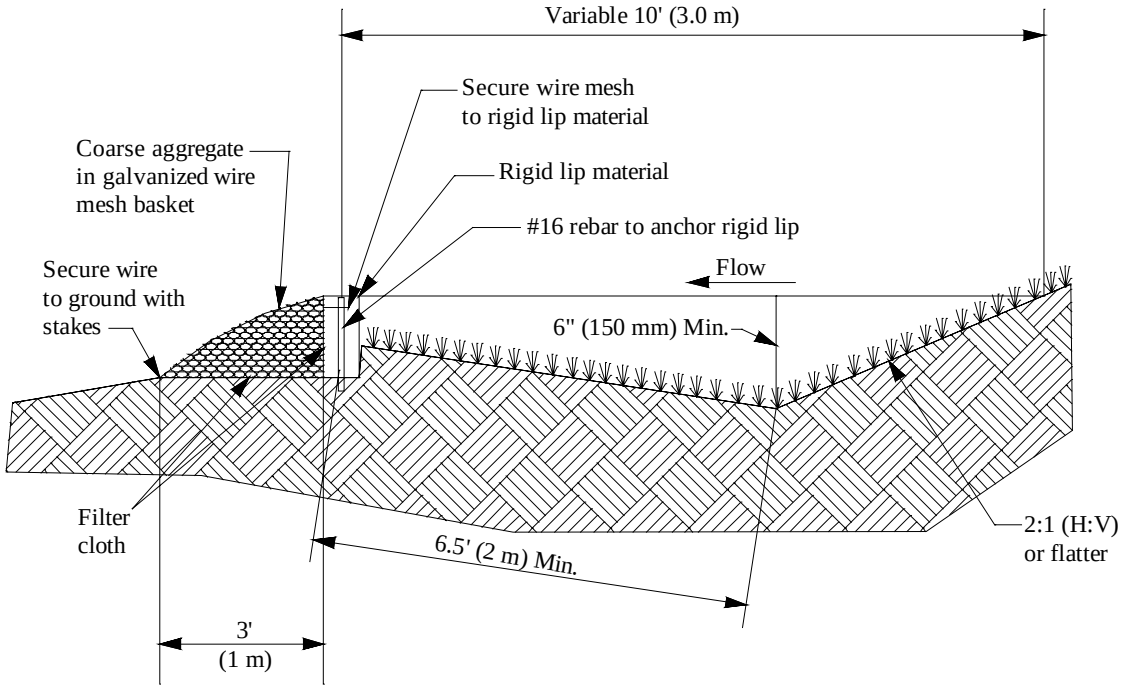

RIGID LIP

N.T.S.

Figure TCP-22-7
Level Spreaders