CHAPTER 10
OUTLET PROTECTION

Chapter 10
OUTLET PROTECTION

Synopsis

Transitions from closed conduit or other flow concentrating facilities to natural channel systems often create high velocities and erosive flow conditions, which must generally be mitigated with facilities that prevent excessive erosion and scour. This chapter provides a general procedure to identify cases when outlet protection may be required, as well as selection criteria and design details for protection facilities. Key references for the information presented in this chapter are USDOT, FHWA, HEC-14 (1983), U.S. Department of the Interior (1978), and USDA, SCS (1975).

While not presented in this chapter FHWA-IP-89-016 (HEC-11) (Brown and Clyde, 1989) should be reviewed for discussions on recognizing erosion potential, erosion mechanisms and rip rap failure modes, riprap types including rock riprap, gabions, preformed blocks, grouted rock, and paved linings, design discharge, flow types, channel geometry, flow resistance, extent of protection and toe depth.

Only outlet protection is addressed in this chapter. Additional temporary and permanent erosion prevention measures may be important to provide stability for other parts of the overall drainage system. Methods for reducing erosion and channel lining or stabilization are discussed in Chapters 3, 9 and Volume 4 Section TCP and PESC.

The general procedure for outlet protection selection and design is presented in Section 10.1. Recommended methods for estimating outlet erosion and scour potential are included in Section 10.2. Design details for riprap aprons, riprap outlet basins, baffled outlets, and U.S. Bureau of Reclamation (USBR) Type II basins are presented in Sections 10.3, 10.4, 10.5, and 10.6, respectively.

10.1 General Procedure

The following procedure is generally applicable for outlet protection facilities:

1. Prepare appropriate input data.

    a. Culvert and other terminal outlet structures
        (1) Design capacity
        (2) Type of control
        (3) Barrel slope
        (4) Outlet depth

(5) Outlet velocity
(6) Length
(7) Tailwater
(8) Froude number

b. Channel
(1) Capacity
(2) Bottom slope
(3) Cross section dimensions
(4) Normal depth
(5) Average velocity
(6) Allowable velocity
(7) Debris and bedload
(8) Soil plasticity index
(9) Saturated shear strength

c. Allowable scourhole dimensions, based on site conditions
(1) Depth, h_s
(2) Width, W_s
(3) Length, L_s
(4) Volume, V_s

2. Compute local scourhole dimensions with the procedure in Section 10.2. A nonerodible layer (e.g., bedrock) may limit scourhole depth but only slightly affect scourhole width and length.

3. Compare the local scourhole dimensions from Step 2 to the allowable scourhole dimensions from Step 1. If the allowable dimensions are exceeded, outlet protection is required.

4. If outlet protection is required, choose an appropriate type. Suggested outlet protection facilities and applicable flow conditions (based on Froude number and dissipation velocity) are presented in Table 10-1. When outlet protection facilities are selected, appropriate design flow conditions and site-specific factors affecting erosion and scour potential, construction cost, and long-term durability should be considered. Applicable conditions for each outlet protection measure are briefly summarized below.

a. <u>Riprap aprons</u> may be used when the outlet Froude number (Fr) is less than or equal to 2.5. In general, riprap aprons prove economical for transitions from culverts to overland sheet flow at terminal outlets, but may also be used for transitions from culvert sections to stable channel sections. Stability of the surface at the termination of the apron should be considered.

b. Riprap outlet basins may also be used when the outlet Fr is less than or equal to 2.5. They are generally used for transitions from culverts to stable channels. Since riprap outlet basins function by creating a hydraulic jump to dissipate energy, performance is impacted by tailwater conditions.

c. Baffled outlets have been used with outlet velocities up to 50 feet per second. Practical application typically requires an outlet Froude number between 1 and 9. Baffled outlets may be used at both terminal outlet and channel outlet transitions. They function by dissipating energy through impact and turbulence and are not significantly affected by tailwater conditions.

d. USBR Type II basins may prove economical when the theoretical dissipation velocity is 50 feet per second or greater. These basins rely upon flow expansion to create an efficient hydraulic jump for energy dissipation. A USBR Type II basin may be desirable when the structural requirements of a baffled outlet become prohibitive.

5. If outlet protection is not required, dissipate energy through formation of a local scourhole. A cutoff wall will be needed at the discharge outlet to prevent structural undermining. The wall depth should be slightly greater than the computed scourhole depth, h_s.

6. Evaluate the downstream channel stability and provide appropriate erosion protection if channel degradation is expected to occur.

10.2 Local Scourhole Estimation

Estimates of erosion at culvert outlets must consider factors such as discharge, culvert diameter, soil type, duration of flow, and tailwater depth. In addition, the magnitude of the total erosion can consist of local scour and channel degradation.

Empirical equations for estimating the maximum dimensions of a local scourhole are presented in Table 10-2. These equations are based on test data obtained as part of a study conducted at Colorado State University (USDOT, FHWA, HEC-14, 1983). A form for recording the following local scourhole computations is presented in Table 10-3:

1. Prepare input data, including:

   Q = Design discharge, in cfs

   For circular culvert, D = diameter, in inches

For other shapes, use the equivalent depth

$y_e = (A/2)^{1/2}$

t = Time of scour, in minutes

v_o = Outlet mean velocity, in feet/second

$\tau_c = 0.0001\ (S_v + 180)\ \tan\ (30 + 1.73\ PI)$ (10-1)

where:

τ_c = Critical tractive shear stress, in pounds/square inch

S_v = Saturated shear strength, in pounds/square inch

PI = Plasticity index from Atterburg limits

The time of scour should be based on a knowledge of peak flow duration. As a guideline, a time of 30 minutes is recommended. Tests indicate that approximately 2/3 to 3/4 of the maximum scour occurs in the first 30 minutes of the flow duration.

2. Based on the channel material, select the proper scour equations and coefficients from Table 10-2.

3. Using the results from the equations selected in Step 2, compute the following scourhole dimensions:

   Depth, h_s

   Width, W_s

   Length, L_s

   Volume, V_s

Observations indicate that a nonerodible layer at a depth less than h_s below the pipe outlet affects only scourhole depth. The width, W_s, and the length, L_s, may still be computed using the equations in Table 10-2.

10.3 Riprap Aprons

A flat riprap apron can be used to prevent erosion at the transition from a pipe or box culvert outlet to a natural channel. Protection is provided primarily by having sufficient length and flare to dissipate energy by expanding the flow. Riprap aprons are appropriate when the culvert outlet Fr is less than or equal to 2.5.

10.3.1 Design Procedure

The procedure presented in this section is taken from USDA, SCS (1975). Two sets of curves, one for minimum and one for maximum tailwater conditions, are used to determine the apron size and the median riprap diameter, d_{50}. If tailwater conditions are unknown, or if both minimum and maximum conditions may occur, the apron should be designed to meet criteria for both. Although the design curves are based on round pipes flowing full, they can be used for partially full pipes and box culverts.

The procedure consists of the following steps:

1. If possible, determine tailwater conditions for the channel. If tailwater is less than one-half the discharge flow depth (pipe diameter if flowing full), minimum tailwater conditions exist and the curves in Figure 10-1 apply. Otherwise, maximum tailwater conditions exist and the curves in Figure 10-2 should be used.

2. Determine the correct apron length and median riprap diameter, d_{50} using the appropriate curves from Figures 10-1 and 10-2. If tailwater conditions are uncertain, find the values for both minimum and maximum conditions and size the apron as shown in Figure 10-3.

    a. For pipes flowing full:

    Use the depth of flow, d, which equals the pipe diameter, in feet, and design discharge, in cfs, to obtain the apron length, L_a, and median riprap diameter, d_{50} from the appropriate curves.

    b. For pipes flowing partially full:

    Use the depth of flow, d, in feet, and velocity, v, in feet/second. On the lower portion of the appropriate figure, find the intersection of the d and v curves, then find the riprap median diameter, d_{50}, from the scale on the right. From the lower d and v intersection point, move vertically to the upper curves until intersecting the curve for the correct flow depth, d. Find the minimum apron length, L_a, from the scale on the left.

    c. For box culverts:

Use the depth of flow, d, in feet, and velocity, v, in feet/second. On the lower portion of the appropriate figure, find the intersection of the d and v curves, then find the riprap median diameter, d_{50}, from the scale on the right. From the lower d and v intersection point, move vertically to the upper curve until intersecting the curve equal to the flow depth, d. Find the minimum apron length, L_a, using the scale on the left.

3. If tailwater conditions are uncertain, the median riprap diameter should be the larger of the values for minimum and maximum conditions. The dimensions of the apron will be as shown in Figure 10-3. This will provide protection under either of the tailwater
4. conditions.

10.3.2 Design Considerations

The following items should be considered during riprap apron design:

1. The maximum stone diameter should be 1.5 times the median riprap diameter. The riprap depth should be 1.5 times the maximum stone diameter or 6 inches, whichever is greater.

2. The apron width at the discharge outlet should be at least equal to the pipe diameter or culvert width, d_w. Riprap should extend up both sides of the apron and around the end of the pipe or culvert at the discharge outlet at a maximum slope of 2:1 and a height not less than the pipe diameter or culvert height and should taper to the flat surface at the end of the apron.

3. If there is a well-defined channel, the apron length should be extended as necessary so that the downstream apron width is equal to the channel width. The sidewalls of the channel should not be steeper than 2:1.

4. If the ground slope downstream of the apron is steep, channel erosion may occur. The apron should be extended as necessary until the slope is gentle enough to prevent further erosion.

5. The potential for vandalism should be considered if the rock is easy to carry. If vandalism is a possibility, the rock size must be increased or the rocks held in place using concrete or grout.

10.3.3 Example Problems

<u>Example 10-1. Riprap Apron Design for Minimum Tailwater Conditions</u>

A flow of 280 cfs discharges from a 66-inch pipe with a tailwater of 2 feet above the pipe invert. Find the required design dimensions for a riprap apron.

1. Compute 0.5 d_o = 2.75 feet.

2. Since TW = 2 feet, use Figure 10-1 for minimum tailwater conditions.

3. By Figure 10-1, the apron length, L_a, and median stone size, d_{50} are 38 feet and 1.2 feet, respectively.

4. The downstream apron width equals the apron length plus the pipe diameter:

   $W = d + L_a = 5.5 + 38 = 43.5$ feet

5. Maximum riprap diameter is 1.5 times the median stone size;

   $1.5\ (d_{50}) = 1.5\ (1.2) = 1.8$ feet

6. Riprap depth = 1.5 (d_{max}) = 1.5 (1.8) = 2.7 feet.

<u>Example 10-2. Riprap Apron Design for Maximum Tailwater Conditions</u>

A concrete box culvert 5.5 feet high and 10 feet wide conveys a flow of 600 cfs at a depth of 5.0 feet. Tailwater depth is 5.0 feet above the culvert outlet invert. Find the design dimensions for a riprap apron.

1. Compute 0.5 (d_o) = 0.5 (5.0) = 2.5 feet.

2. Since TW = 5.0 feet is greater than 2.5 feet, use Figure 10-2 for maximum tailwater conditions.

   $$v = Q / A = \frac{600}{(5)(10)} = 12 \text{ feet/second}$$

3. On Figure 10-2, at the intersection of the curve, d_o = 60 inches and v = 12 feet/second, d_{50} = 0.4 foot.

   Reading up to the intersection with d = 60 inches, find L_a = 40 feet.

5. Apron width downstream = $d_w + 0.4\ L_a = 10 + 0.4\ (40) = 26$ feet.

5. Maximum stone diameter = 1.5 d_{50} = 1.5 (0.4) = 0.6 feet.

6. Riprap depth = 1.5 d_{max} = 1.5 (0.6) = 0.9 feet.

10.4 Riprap Outlet Basins

A riprap outlet basin is a preshaped scourhole lined with riprap that functions as an energy dissipator by forming a hydraulic jump. The discussion is based on data obtained from a study conducted at Colorado State University (USDOT, FHWA, HEC-14, 1983). A detailed schematic diagram of a riprap outlet basin is presented in Figure 10-4.

10.4.1 Design Procedure

A form for recording the following riprap outlet basin computations is presented in Table 10-4:

1. Estimate the flow properties at the brink of the culvert. Establish the brink invert elevation such that $TW/y_o \leq 0.75$ for design discharge.

2. For subcritical flow conditions (culvert set on mild or horizontal slope), use Figure 10-5 or 10-6 to obtain y_o/D, then obtain v_o by dividing Q by the wetted area associated with y_o. D is the height of a box culvert. If the culvert is on a steep slope, v_o will be the normal velocity obtained by using Manning's Equation for appropriate slope, section, and discharge (see Chapter 3).

3. Compute Fr for brink conditions ($y_e = (A/2)^{1/2}$). Select the d_{50}/y_e value appropriate for available riprap (usually the most satisfactory results will be obtained if $0.25 < d_{50}/y_e < 0.45$). Obtain h_s/y_e from Figure 10-7, and check to see that $2 \leq h_s/d_{50} \leq 4$. Repeat computations if h_s/d_{50} falls out of this range.

4. Size basin using details shown in Figure 10-4.

5. Where the allowable exit velocity for the riprap basin is exceeded:

   a. Determine the average normal flow depth in the natural channel for the design discharge.

   b. Extend the length of the riprap basin (if necessary) so that the width of the basin at section A-A of Figure 10-4 times the average normal flow depth in the natural channel is approximately equal to the design discharge divided by the specified exit velocity.

6. In the exit region of the basin, warp (or transition) the walls and apron of the basin so that the cross section of the basin at the exit conforms to the cross section of the natural

channel. Abrupt transition of surfaces should be avoided to minimize separation zones and resultant eddies.

7. If high tailwater is a possibility and erosion protection is necessary for the downstream channel, the following design procedure is suggested:

   a. Design a conventional basin for low tailwater conditions in accordance with the instructions above.

   b. Estimate centerline velocity at a series of downstream cross sections using the information shown in Figure 10-8.

   c. Shape downstream channel and size riprap using Figure 10-9 and the stream velocities obtained from Figure 10-8.

10.4.2 Design Considerations

Riprap outlet basin design should include a consideration of the following additional items:

1. The dimensions of a scourhole in a basin constructed with angular rock can be approximately the same as the dimensions of a scourhole in a basin constructed of rounded material when rock size and other variables are similar.

2. When the ratio of tailwater depth to brink depth, TW/y_o, is less than 0.75 and the ratio of scour depth to size of riprap, h_s/d_{50}, is greater than 2.0, the scourhole should function very efficiently as an energy dissipator. The concentrated flow at the culvert brink plunges into the hole, a jump forms against the downstream extremity of the scourhole, and flow is generally well dispersed as it leaves the basin.

3. The surface of the riprapped floor of the energy dissipating pool is constructed at an elevation, h_s, below the culvert invert. This elevation is the approximate depth of scour that would occur in a thick pad of riprap constructed at the outfall of the culvert, if subjected to the design discharge. The ratio of h_s to d_{50} of the material should range from 2 to 4.

4. The mound of material formed on the bed downstream of the scourhole contributes to the dissipation of energy and reduces the size of the scourhole; that is, if the mound from a stable scoured basin is removed and the basin is again subjected to design flow, the scourhole is enlarged.

5. For high tailwater basins (TW/y_o greater than 0.75), the high velocity core of water emerging from the culvert retains its jetlike character as it passes through the basin and diffuses similarly to a concentrated jet diffusing in a large body of water. As a result, the

scourhole is much shallower and generally longer. Consequently, riprap may be required for the channel downstream of the rock-lined basin.

6. The length of the energy dissipating pool is 10 (h_s) or $3W_o$, whichever is larger. The overall length of the basin is 15 (h_s) or $4W_o$, whichever is larger.

7. It should be recognized that there is a potential for limited degradation to the floor of the dissipator pool for rare event discharges. With the protection afforded by the $2(d_{50})$ thickness of riprap, the heavy layer of riprap adjacent to the roadway prism, and the apron riprap in the downstream portion of the basin, such damage should be superficial.

8. Filter material should be considered to prevent the migration of streambed material through the riprap. Bank material adjacent to a culvert is not subjected to flow for long continuous periods. Also, the streambed material may be sufficiently well graded and not require a filter. If some siltation of the basin accompanied by plant growth is anticipated, a filter may not be required. If required, a filter cloth or filter material should be specified.

9. Stability of the surface at the outlet of a basin should be considered using the methods for open channel flow in Chapter 3. If required, riprap lined transitions should be designed as outlined in Chapter 3.

10.4.3 Example Problems

<u>Example 10-3. Riprap Outlet Basin Design for Supercritical Flow and Minimum Tailwater Conditions</u>

An 8-foot by 6-foot box culvert conveys a supercritical flow of 800 cfs. The normal flow depth and the equivalent brink depth (y_e) both equal 4 feet. Tailwater depth is estimated to be 2.8 feet. Find the dimensions of a riprap outlet basin for these conditions.

1. For a rectangular section, $y_o = y_e = 4$ feet.

2. Compute the outlet velocity.

   $v_o = Q/A = 800/(4)\ (8) = 25$ feet/second

3. Use the outlet velocity to compute the Froude number,

   $Fr = v_o/[(32.2)\ (y_e)]^{1/2}$

   $Fr = 25/[(32.2)\ (4)]^{1/2} = 2.20$

4. Determine the ratio of the tailwater depth and equivalent brink depth.

   $TW/y_e = 2.8/4.0 = 0.7$

   $TW/y_e < 0.75$ OK

5. Try $d_{50}/y_e = 0.45$, $d_{50} = (0.45)\ (4) = 1.80$ feet

   From Figure 10-7, $h_s/y_e = 1.6$

   $h_s = (4)\ (1.6) = 6.4$ feet

   $h_s/d_{50} = 6.4/1.8 = 3.6$ feet

   $2 \leq h_s/d_{50} \leq 4$ OK

6. Determine the required pool length as the larger of the following:

   a. $L_s = (10)\ (6.4) = 64$ feet

   b. $L_s = (3)\ (W_o) = (3)\ (8) = 24$ feet
      Use L = 64 feet.

7. Determine the required overall apron length as the larger of the following:

   a. $L_B = (15)\ (6.4) = 96$ feet

   b. $L_B = (4)\ (W_o) = (4)\ (8) = 32$ feet

   c. Use B = 96 feet.

8. Other basin dimensions are designed in accordance with details shown in Figure 10-4.

<u>Example 10-4. Riprap Outlet Basin Design for Supercritical Flow and Maximum Tailwater Conditions with Excessive Outlet Velocity</u>

An 8-foot by 6-foot box culvert conveys a supercritical flow of 800 cfs. The normal depth and the equivalent brink depth (y_e) are both equal to 4 feet. The tailwater depth is 4.2 feet and the downstream channel can tolerate a maximum velocity of 7 feet per second. Find the dimensions of a riprap outlet basin for these conditions.

Note—High tailwater depth, $TW/y_o = 1.05 > 0.75$.

1. Design riprap basin using Steps 1-7 in Example 10-3.

   d_{50} = 1.8 feet

   h_s = 6.4 feet

   L_s = 64 feet

   L_B = 96 feet

2. Design riprap for downstream channel. Use Figure 10-8 for estimating average velocity along the channel. Compute equivalent circular diameter, D_e, for brink area.

   $A = \pi D_e^{\,2}/4 = (y_o)(W_o) = (4)(8) = 32$ square feet

   $D_e = [32\,(4) / \pi]^{1/2}$

   D_e = 6.4 feet
   v_o = 25 feet/second (Example 10-3)

L/D_e	L (ft)	v_L/v_o (from Figure 10-8)	v_L ft/sec	Rock Size d_{50} (ft) (from Figure 10-9)
10	64	0.59	14.7	1.4
15	96	0.36	9.0	0.6
20	128	0.30	7.5	0.4
21	135	0.28	7.0	0.4

3. Riprap should be at least the size shown. As a practical consideration, the channel can be lined with the same size rock used for the basin. Protection must extend at least 135 feet downstream from the culvert brink.

Example 10-5. Riprap Outlet Basin Design for Subcritical Flow Conditions

A 6-foot diameter CMP culvert conveys a subcritical flow of 135 cfs with a normal depth of 4.5 feet and a normal velocity of 5.9 feet per second. The associated slope is 0.004 and Manning's n is 0.024. For a tailwater depth of 2.0 feet, find the dimensions of a riprap outlet basin.

1. Determine the outlet depth, y_o, and the outlet velocity, v_o.

   $Q/D^{2.5} = 135/(6)^{2.5} = 1.53$

$TW/D = 2.0/6 = 0.33$

From Figure 10-6, $y_o/D = 0.45$

$y_o = (0.45)\ (6) = 2.7$ feet

$TW/y_o = 2.0/2.70 = 0.74$

$TW/y_o < 0.75$ OK

Find the brink area, A, for $y_o/D = 0.45$.

$A = (0.343)\ (36) = 12.3$ square feet (0.343 is from Chapter 3)

$v_o = Q/A = 135/12.3 = 11.0$ feet/second

2. Compute the equivalent brink depth.

$y_e = (A/2)^{0.5} = (12.3/2)^{0.5} = 2.48$ feet

3. Compute the outlet Froude number.

$Fr_o = v_o/[(32.2)\ (y_e)]^{0.5}$

$Fr_o = 11/[(32.2)\ (2.48)]^{0.5} = 1.23$

4. Try $d_{50}/y_e = 0.25$.

$d_{50} = (0.25)\ (2.48) = 0.62$ feet

From Figure 10-7,

$h_s/y_e = 0.75$

$h_s = (0.75)\ (2.48) = 1.86$ feet

Check: $h_s/d_{50} = 1.86/0.62 = 3$, $2 \leq h_s/d_{50} \leq 4$ OK

5. Compute the pool length as the larger of the following:

a. $L_s = (10)\ (h_s) = (10)\ (1.86) = 18.6$ feet

b. $L_s = (3)\ (W_o) = (3)\ (6) = 18$ feet

Use L_s = 18.6 feet.

6. Compute the overall apron length as the larger of the following:

   a. $L_B = (15)\ (h_s) = (15)\ (1.86) = 27.9$ feet

   b. $L_B = (4)\ (W_o) = (4)\ (6) = 24$ feet

   Use L_B = 27.9 feet.

7. d_{50} = 0.62 feet; use d_{50} = 8 inches.

8. Other basin dimensions are assigned in accordance with details shown in Figure 10-4.

10.5 Baffled Outlets

The baffled outlet is a boxlike structure with a vertical hanging baffle and an end sill, as shown in **Figure 10-10**. Energy is dissipated primarily through the impact of the water striking the baffle and, to a lesser extent, through the resulting turbulence. This type of outlet protection has been used with outlet velocities up to 50 feet per second and with Froude numbers from 1 to 9. Tailwater depth is not required for adequate energy dissipation, but a tailwater will help smooth the outlet flow.

10.5.1 Design Procedure

The following design procedure is based on physical modeling studies summarized from the U.S. Department of the Interior (1978). The dimensions of a baffled outlet as shown in Figure 10-10 should be calculated as follows:

1. Determine input parameters, including:

   h = Energy head to be dissipated, in feet (can be approximated as the difference between channel invert elevations at the inlet and outlet)

   Q = Design discharge, in cfs

   v = Theoretical velocity, in feet/second = $\sqrt{2gh}$

   A = Q/v = Flow area, in square feet

$d = \sqrt{A}$ = Representative flow depth entering the basin, in feet (assumes square jet)

$F_r = v / \sqrt{gd}$ = Froude number, dimensionless

2. Calculate the minimum basin width, W, in feet, using the following equation, which is shown graphically in Figure 10-11:

$$W/d = 2.88Fr^{0.566} \qquad (10\text{-}2)$$

or

$$W = 2.88dFr^{0.566} \qquad (10\text{-}3)$$

where

W = Minimum basin width, in feet

d = Depth of incoming flow, in feet

$F_r = v / \sqrt{gd}$ = Froude number, dimensionless

The limits of the W/d ratio are from 3 to 10, which corresponds to Froude numbers 1 and 9. If the basin is much wider than W, flow will pass under the baffle and energy dissipation will not be effective.

3. Calculate other basin dimensions as shown in Figure 10-10, as a function of W. Standard construction drawings for selected widths are available from the U.S. Department of the Interior (1978).

4. Calculate required protection for the transition from the baffled outlet to the natural channel based on the outlet width. A riprap apron should be added of width W, length W (or a 5-foot minimum) , and depth f (W/6). The side slopes should be 1.5:1, and median rock diameter should be at least W/20.

5. Calculate the baffled outlet invert elevation based on expected tailwater. The maximum distance between expected tailwater elevation and the invert should be b + f or some flow will go over the baffle with no energy dissipation. If the tailwater is known and fairly controlled, the baffled outlet invert should be a distance, b/2 + f, below the calculated tailwater elevation. If tailwater is uncontrolled, the baffled outlet invert should be a distance, f, below the downstream channel invert.

6. Calculate the outlet pipe diameter entering the basin assuming a velocity of 12 feet per second flowing full.

7. If the entrance pipe slopes downward, the outlet pipe should be turned horizontal for at least 3 feet before entering the baffled outlet.

8. If it is possible that both the upstream and downstream ends of the pipe will be submerged, provide an air vent of diameter approximately 1/6 the pipe diameter near the upstream end to prevent pressure fluctuations and possible surging flow conditions.

10.5.2 Example Problem

<u>Example 10-6. Baffled Outlet Basin Design</u>

A cross-drainage pipe structure has a design flow rate of 150 cfs, a head, h, of 30 feet, and a tailwater depth, TW, of 3 feet above ground surface. Find the baffled outlet basin dimensions and inlet pipe requirements.

1. Compute the theoretical velocity from

$$v = \sqrt{2gh} = \sqrt{2(32.2\ \text{ft/sec}^2)(30\ \text{ft})}$$

$v = 43.95$ feet/second

This is less than 50 feet/second, so a baffled outlet is suitable.

2. Determine the flow area using the theoretical velocity as follows:

$$A = \frac{Q}{v} = \frac{150\ \text{cfs}}{43.95\ \text{ft/sec}} = 3.41\ \text{squarefeet}$$

3. Compute the representative flow depth using the area from Step 2.

$$d = \sqrt{A} = \sqrt{3.41\ \text{ft}^2} = 1.85\ \text{feet}$$

4. Compute the Froude number using the results from Steps 2 and 3.

$$F_r = \frac{v}{\sqrt{gd}} = \frac{43.95\ \text{ft/sec}}{\sqrt{(32.2\ \text{ft/sec}^2)(1.85\ \text{ft})}} = 5.7$$

5. Determine the basin width using Equation 10-3 with the Froude number from Step 4.

$W = 2.88\ dFr^{0.566}$

$W = 2.88\ (1.85)\ \ (5.7)^{0.566}$

W = 14.27 feet (minimum)

Use 14 feet, 4 inches as design width.

6. Compute the remaining basin dimensions (as shown in Figure 10-10):

L = 4/3 (W) = 19.1 feet
Use L = 19 feet, 2 inches

f = 1/6 (W) = 2.39 feet
Use f = 2 feet, 5 inches

e = 1/12 (W) = 1.19 feet
Use e = 1 foot, 3 inches

H = 3/4 (W) = 10.75 feet
Use H = 10 feet, 9 inches

a = 1/2 (W) = 7.17 feet
Use a = 7 feet, 2 inches

b = 3/8 (W) = 5.38 feet
Use b = 5 feet, 5 inches

c = 1/2 (W) = 7.17 feet
Use c = 7 feet, 2 inches

Baffle opening dimensions would be calculated from f as shown in Figure 10-10.

7. Basin invert should be at

$\frac{b}{2}$ + f below tailwater, or

$\frac{5\ feet, 5 inches}{2}$ + 2 feet, 5 inches = 5.125 feet

Use 5 feet 2 inches; therefore, invert should be 2 feet, 2 inches below ground surface.

8. The riprap transition from the baffled outlet to the natural channel should be 14 feet, 4 inches long by 14 feet, 4 inches wide by 2 feet, 5 inches deep (W x Wx f). Median rock diameter should be of diameter W/20, or about 9 inches.

9. Inlet pipe diameter should be sized for an inlet velocity of about 12 feet/second.

$$\frac{pd^2}{4} = \frac{Q}{v} \quad ; \qquad d = \sqrt{\frac{4Q}{pv}} = \sqrt{\frac{4(150\text{ cfs})}{p(12\text{ ft/sec})}} = 3.99\text{ feet}$$

Use 48-inch pipe. If a vent is required, it should be about 1/6 of the pipe diameter or 8 inches.

10.6 U.S. Bureau of Reclamation Type II Outlet Basin

The Type II Basin was developed by the USBR based on model studies and evaluation of existing basins. The basin elements are shown in Figure 10-12. Chute blocks and a dentated sill are used, but because the useful range of the basin involves relatively high velocities entering the jump, baffle blocks are not employed.

10.6.1 Supercritical Flow Expansion

For expansions where the exit Fr is greater than 3, the location of the section being considered is greater than three culvert diameters away from the outlet, and S_o is less than 10 percent, the energy equation can be used to determine flow conditions leaving the transition. Normally, these parameters would be used as the input values for a basin design. For conditions outside these limits, more appropriate values must be used.

The expansion shown in Figure 10-13 is used to convert depth or potential energy at the culvert outlet to kinetic energy by allowing the flow to expand, drop, or both. The results are that the depth decreases, the velocity increases, and Fr increases. The higher Fr results in a more efficient jump and a shorter basin is required. All design dimensions are defined graphically in Figure 10-13.

The energy balance is written from the culvert outlet, section 0, to the basin, section 1 (see Figure 10-13). Substituting $Q/y_1 W_B$ for v_1 and solving for Q results in:

$$Q = y_1 W_B \left[2g(z_o - z_1 + y_o - y_1) + v_o^2\right]^{0.5} \qquad (10\text{-}4)$$

where:

Q = Design discharge, in cfs

v_o = Outlet velocity, in feet/second

g = Acceleration due to gravity, 32.2 feet/second^2

and the remaining dimensions are defined in Figure 10-13

This expression has three unknowns: y_1, W_B,and z_1. The depth, y_1, can be determined by trial and error if W_B and z_1 are assumed. The width, W_B, should be limited to the width that a jet would flare naturally in the slope distance, L, as expressed below:

$$W_B < W_o + 2L_T\left(\sqrt{S_T^{\ 2}+1}\right)/3(Fr_o) \qquad (10\text{-}5)$$

where:

Fr = Outlet Froude number

and the remaining terms are as defined in Figure 10-13

Since the flow is supercritical, the trial y_1 value should start near zero and increase until the design Q is reached. This depth, y_1, is used to find the sequent depth, y_2, using the hydraulic jump equation:

$$y_2 = C_1 y_1\left[\sqrt{1+8Fr^2}-1\right]/2 \qquad (10\text{-}6)$$

where:

$C_1 = TW/y_2$

For USBR basins, C_1 is found using the procedure in Section 10.6.2. The above value of $y_2 + z_2$ must be equal to or less than TW + z_3 for the jump to occur. To perform this check, z_3 is obtained graphically or by using the following expressions:

$$L_T = (z_o - z_1)/S_T \qquad (10\text{-}7)$$

$$L_s = (z_3 - z_2)/S_s \qquad (10\text{-}8)$$

$$L_B = f(y_1, Fr_1) \qquad (10\text{-}9)$$

$$L = L_T + L_B + L_S = (z_o - z_3)/S_o \qquad (10\text{-}10)$$

Solving for z_3 yields

$$z_3 = z_o - (L_T + L_B - z_2/S_s)\, S_o/(S_o/S_s + 1) \qquad (10\text{-}11)$$

This expression is valid only if z_2 is less than or equal to z_3.

If $z_2 + y_2$ is greater than z_3 + TW, the basin must be lowered and the trial and error process repeated until sufficient tailwater exists to force the jump. Perform the following steps to calculate design parameters:

1. Calculate culvert brink depth, y_o, using Figure 10-5 or 10-6, velocity v_o, and Fr = $v_o / \sqrt{gy_o}$.

2. Determine y_n (tailwater, TW) in downstream channel using procedures in Chapter 3.

3. Find y_2 using Equation 10-6.

4. Compare y_2 and TW. If $y_2 <$ TW, the jump will form. If $y_2 >$ TW, lower the basin to provide additional tailwater.

5. Determine the elevation of the basin by trial and error.

   a. Choose trial basin elevation, z_1.

   b. Choose basin width, W_B, and basin slopes, S_T and S_s. A slope of 0.5 (2:1) or 0.33(3:1) is satisfactory for either S_T or S_s.

   c. Check W_B using Equation 10-5.

   d. Calculate y_1 by trial and error using Equation 10-3 and calculate v_1.

   e. Calculate
   $Fr_1 = v_1 / \sqrt{gy_1}$.

   f. Determine y_2 using Equation 10-6 with C_1 corresponding to basin type.

   g. Find z_3 using Equation 10-11.

   h. Calculate $y_2 + z_2$ and z_3 + TW. If $y_2 = z_2$ is greater than z_3 + TW, choose another z_1 and repeat steps 5a through 5h until balance is reached.

6. Calculate L_T, L_s, and L_B using Equations 10-7, 10-8, and 10-9 and compute the horizontal distance downstream to the sill crest, L, using Equation 10-10. L_B can also be found using Figure 10-14.

7. Determine radius to use between culvert and transition from Figure 10-15.

10.6.2 Design Procedure

A form for recording the following USBR Type II design computations is presented in Table 10-5;

1. Determine basin width, W_B, elevation, z_1, length, L_B, total length, L, incoming depth, y_1, incoming Froude number, Fr_1, and jump height, y_2, by using the procedure in Section 10.6.1. For step 5f of Section 10.6.1, use C = 1.1 to find y_2. For Step 6 of Section 10.6.1, use Figure 10-14 to find L_B.

2. The required tailwater depth is as indicated in **Figure 10-16**.

3. The chute block height, h_1, width, W_1, and spacing, W_2, are all equal to the incoming depth.

   $W_1 \;\; W_2 \;\; h_1 = y_1$

   The number of blocks, N_c, is equal to

   $N_c = W_B/2y_1$, rounded to a whole number

   Adjusted $W_1 = W_2 = W_B/2N_c$

   Side wall spacing = $W_1/2$

4. The dentated sill height, h_2, the block width, W_3, and the spacing width, W_4, are determined as follows:

   $h_2 = 0.2y_2$

   $W_3 \;\; W_4 \;\; 0.15y_2$

   where y_2 = jump height

The number of blocks, N_s, plus spaces approximately equals W_B/W_3. Round this to the next lowest odd whole number and adjust $W_3 = W_4$ to fit W_B. The downstream sill slope is 2:1.

10.6.3 Design Considerations

The following factors should be considered during basin design:

1. The Type II basin may be used for Fr from 4 to 14.

2. The chute blocks and end sill do not need to be staggered relative to each other. The width and spacing of the sill blocks may be reduced, but should remain proportional.

3. This design procedure will result in a conservative stilling basin for flows up to 500 cfs per foot of basin width.

4. Chute blocks tend to lift part of the incoming jet from the floor, creating a large number of energy dissipating eddies. The blocks also reduce the tendency of the jump to sweep off the apron. Test data and evaluation of existing structures indicate that a chute block height, width, and spacing equal to the depth of incoming flow, y_1, are satisfactory.

5. As long as the velocity distribution of the incoming jet is fairly uniform, the effect of the chute slope on jump performance is insignificant. For steep chutes or short flat chutes, the velocity distribution can be considered uniform. Difficulty will be experienced with long flat chutes where frictional resistance results in center velocities substantially exceeding those on the sides. This causes an asymmetrical jump with strong side eddies. The same effect will result from sidewall divergent angles too large for the water to follow.

6. The design information for the Type II basin is considered valid for rectangular sections only. If trapezoidal or other sections are proposed, a model study is recommended to determine design parameters.

7. A margin of safety for tailwater is recommended for inclusion in the design. The basin should always be designed with a tailwater 10 percent greater than the conjugate depth. This safety factor is included in the design curves used.

10.6.4 Example Problem

<u>Example 10-7. USBR Type II Outlet Basin Design</u>

Given a 10-foot by 6-foot RCB, Q = 417 cfs, S_o = 6.5%, elevation outlet invert z_o = 100 feet, and v_o = 27.8 feet/second, y_o = 1.5 feet. The downstream channel is a 10-foot bottom trapezoidal channel with 2:1 side slopes and n = 0.03. Find the dimensions for a USBR Type II basin.

1. Determine basin elevation using procedures outlined in Section 10.6.1:

a. Compute the outlet Froude number for v_o = 27.8 feet/second and y_o = 1.5 feet, Fr_o = 4.

b. Estimate the tailwater depth using the normal depth in the channel, TW = y_n = 1.9 ft. The resulting normal velocity is = 15.9 feet/second.

c. Determine the depth at Section 2,

$$y_2 = C_1 y_1 \left[\sqrt{1 + 8Fr^2} - 1 \right] / 2 =$$

$$1.1(1.5)\left[\sqrt{1 + 8(4)^2} - 1 \right] / 2 = 8.6\, feet$$

d. Since y_2 > TW (8.6 > 1.9), drop the basin.

e. (1) Use z_1 = 84.5 feet = z_2

(2) W_B = 10 feet, $S_T = S_s$ = 0.5

(3) W_B OK, no flare

(4) From Equation 10-4,

$Q = l0y_1\ [2g(100 - 84.5 + 1.5 - y_1) + 27.8^2]^{1/2}$

$Q = l0y_1\ [64.4(17 - y_1) + 772.8]^{1/2}$

Solving for the depth at section 1, y_1 = 0.98 OK

The resulting velocity at section 1 is v_1 = 417/.98 (10) = 42.6 feet/second

(5) Compute the Froude number for section 1,

$$Fr_1 = 42.6 / \sqrt{g(0.98)} = 7.58$$

(6) For C_1 = 1.1, y_2 = 1.1(.98)

$$\left[\sqrt{1 + 8(6.93)^2} - 1 \right] / 2 = 11\, feet$$

(7) Determine the basin dimensions. From Figure 10-14,

$L_B/y_2 = 4.3$

$L_B = 47.5$ feet

$L_T = (z_o - z_1)/S_T = (100 - 84.5)/.5 = 31$ feet

$z_3 = [100 - (47.5 + 31 - 84.5/0.5)\ 0.065]/1.13$

$z_3 = 93.7$ feet

(8) $y_2 + z_2 = 95.5$ feet

$z_3 + TW = 95.6$ feet OK

f. $L_T = 31$ feet, $L_B = 47.5$ feet

$L_S = (z_3 - z_2)/S_s = (93.7 - 84.5)/0.5 = 18.4$ feet

$L = 31 + 47.5 + 18.4 = 97$ feet

g. $Fr_o = 4$ from Figure 10-16, $y_o/r = 0.1$

$r = 1.5/0.1 = 15$ feet

Basin width, $W_B = 10$ feet

Basin elevation, $z_1 = 84.5$ feet

Basin length, $L_B = 47.5$ feet

Total length, $L = 97$ feet

Incoming depth, $y_1 \cong 1$ foot

Incoming Froude number, $Fr_1 = 7.6$

Jump height, $y_2 \cong 11$ feet

h. Determine the chute block dimensions

$h_1 = W_1 = W_2 = y_1 = 1.0$ foot

$N_c = 10/2(1) = 5$ OK, whole number

$W_1 = W_2 = 10/2(5) = 1$

Sidewall spacing = $W_1/2 = 0.5$ foot

i. Determine the dentated sill dimensions:

$h_2 = 0.2y_2 = 0.2(11) = 2.2$ feet

$W_3 = W_4 = 0.15y_2 = 1.65$ feet

$N_s = W_B/W_3 = 10/1.65 \cong 6$

Use 5, which makes 3 blocks and 2 spaces each 2 feet.

Table 10-1
SUGGESTED OUTLET PROTECTION TYPE
BASED ON FROUDE NUMBER AND VELOCITY

Type of Outlet Protection	$Fr \leq 2.5$	Fr Between 2.5 and 4.5	$Fr \geq 4.5$ and $V < 50$ [a]	$Fr \geq 4.5$ and $V \geq 50$ [a]
Riprap Apron	X			
Riprap Outlet Basin	X			
Baffled Outlet	X [b]	X [b]	X [b]	
USBR Type II Basin				X

[a] Velocity is based on the energy to be dissipated. Theoretically, the dissipation velocity can be calculated using the equation:

$$v = \sqrt{2\,gh}$$

Where: v = Theoretical dissipation velocity, in feet/second

g = Acceleration due to gravity, 32.2 feet/second ^{2}

h = Energy head to be dissipated, in feet (can be approximated as the difference between channel invert elevations at the inlet and outlet)

[b] Practical application requires that $1 \leq Fr \leq 9$.

Table 10-2
EXPERIMENTAL COEFFICIENTS FOR CULVERT OUTLET SCOUR

Material	Nominal Grain Size d_{50} (mm)	Scour Equa-tion	Depth h_s				Width W_s				Length L_s				Volume V_s			
			α	β	θ	α_e	α	β	θ	α_e	α	β	θ	α_e	α	β	θ	α_e
Uniform Sand	0.20	V-1 or V-2	2.72	.375	0.10	2.79	11.73	0.92	.15	6.44	16.82	0.71	0.125	11.75	203.36	2.0	0.375	80.71
Uniform Sand	2.0	V-1 or V-2	1.86	0.45	0.09	1.76	8.44	0.57	0.06	6.94	18.28	0.51	0.17	16.10	101.48	1.41	0.34	79.62
Graded Sand	2.0	V-1 or V-2	1.22	0.85	0.07	.75	7.25	0.76	0.06	4.78	12.77	0.41	0.04	12.62	36.17	2.09	0.19	12.94
Uniform Gravel	8.0	V-1 or V-2	1.78	0.45	0.04	1.68	9.13	0.62	0.08	7.08	14.36	0.95	0.12	7.61	65.91	1.86	0.19	12.15
Graded Gravel	8.0	V-1 or V-2	1.49	0.50	0.03	1.33	8.76	0.89	0.10	4.97	13.09	0.62	0.07	10.15	42.31	2.28	0.17	32.82
Cohesive Sandy Clay																		
60% Sand PI 15	0.15	V-1 or V-2	1.86	0.57	0.10	1.53	8.63	0.35	0.07	9.14	15.30	0.43	0.09	14.78	79.73	1.42	0.23	61.84
Clay PI 5-16	Various	V-3 or V-4	0.86	0.18	0.10	1.37	3.55	0.17	0.07	5.63	2.82	0.33	0.09	4.48	0.62	0.93	0.23	2.48

EQUATIONS

V-1. FOR CIRCULAR CULVERTS. Cohesionless material or the 0.15mm cohesive sandy clay.

$$\left[\frac{h_s}{D}, \frac{W_s}{D}, \frac{L_s}{D}, or\ \frac{V_s}{D^3}\right] = \propto \left(\frac{Q}{\sqrt{g}\,D^{5/2}}\right)^b \left(\frac{t}{t_o}\right)^q$$

where t_o = 316 min.

V-2. FOR OTHER CULVERT SHAPES. Same material as above.

$$\left[\frac{h_s}{y_e}, \frac{W_s}{y_e}, \frac{L_s}{y_e}, or\ \frac{V_s}{y^3{}_e}\right] = \propto_e \left(\frac{Q}{\sqrt{g}\,y_e^{5/2}}\right)^b \left(\frac{t}{t_o}\right)^q$$

where t_o = 316 min.
Reference: USDOT, FHWA, HEC-14 (1983).

V-3. FOR CIRCULAR CULVERTS. Cohesive sandy clay with PI = 5-16.

$$\left[\frac{h_s}{D}, \frac{W_s}{D}, \frac{L_s}{D}, or\ \frac{V_s}{D^3}\right] = \propto \left(\frac{rV^2}{t_c}\right)^b \left(\frac{t}{t_o}\right)^q$$

where t_o = 316 min.

V-4. FOR OTHER CULVERT SHAPES. Cohesive sandy clay with PI = 5-16.

$$\left[\frac{h_s}{y_e}, \frac{W_s}{y_e}, \frac{L_s}{y_e}, or\ \frac{V_s}{y_e^3}\right] = \propto_e \left(\frac{rV^2}{t_c}\right)^b \left(\frac{t}{t_o}\right)^q$$

where t_o = 316 min.

Project _____
Station _____
Designer _____
Date _____

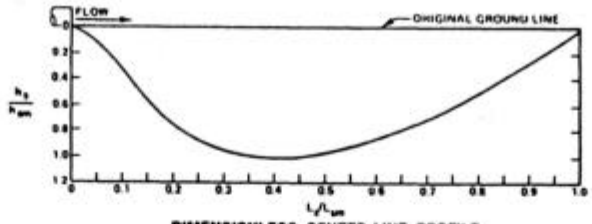

(1) $y_e = (A/2)^{1/2}$

	TYPE / CONTROL	SIZE	"n"	LENGTH	SLOPE S_o	DISCHARGE	DEPTH y_o	VELOCITY V_o	FLOW AREA	EQUI(1) DEPTH y_e	Fr	END TREATMENT Entrance	END TREATMENT Exit
CULVERT													

	TYPE	SIDE SLOPE	"n"	BOTTOM WIDTH	SLOPE	DISCHARGE Q	VELOCITY	FLOW AREA	TW	FREE BOARD	FR	TYPE OF MATERIAL
CHANNEL												

	EQUIVALENT DEPTH y_e	SCOUR DEPTH h_s	SCOUR WIDTH W_s	SCOUR LENGTH L_s	SCOUR VOLUME V_s
SCOUR COMPUTATIONS					

	VELOCITY	SCOUR DEPTH	SCOUR WIDTH	SCOUR LENGTH	OTHER RESTRICTIONS
ALLOWABLE CONDITIONS					

OTHER SITE CONSTRAINTS	

Reference: USDOT, FHWA, HEC-14 (1983).

Table 10-3
Culvert, Channel, Scour, and Other Site Data Computation Form

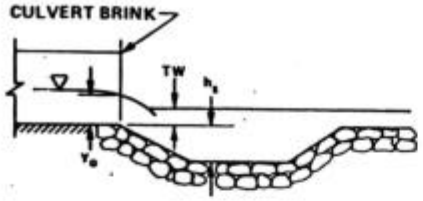

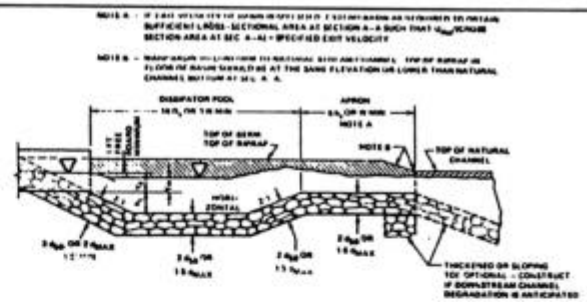

	TW	y_e	(1) TW/y_e	d_{50}/y_e	d_{50}	h_s/y_e	h_s	(2) h_s/d_{50}	
LOW TW $TW/y_e \leq 0.75$									
	V ALLOWABLE	L/D_e (3)	L	V_{ave}/V_L	V_L				
HIGH TW $TW/y_e > 0.75$									

	Larger of		
Length of Pool	$= 10\ h_s$ or $3W_o$	= _____	ft.
Length of Apron	$= 5\ h_s$ or W_o	= _____	ft.
Thickness of Approach	$= 3d_{50}$ or $2d_{max}$	= _____	ft.
Thickness of Remainder of Basin	$= 2d_{50}$ or $1.5d_{max}$	= _____	ft.

(1) $TW/y_e \leq 0.75$ for Low TW Design
(2) $2 < hs/d_{50} < 4$
(3) $D_e = [4A/\pi]^{1/2}$

Reference: USDOT, FHWA, HEC-14 (1983).

Table 10-4
Riprap Outlet Basin Computation Form

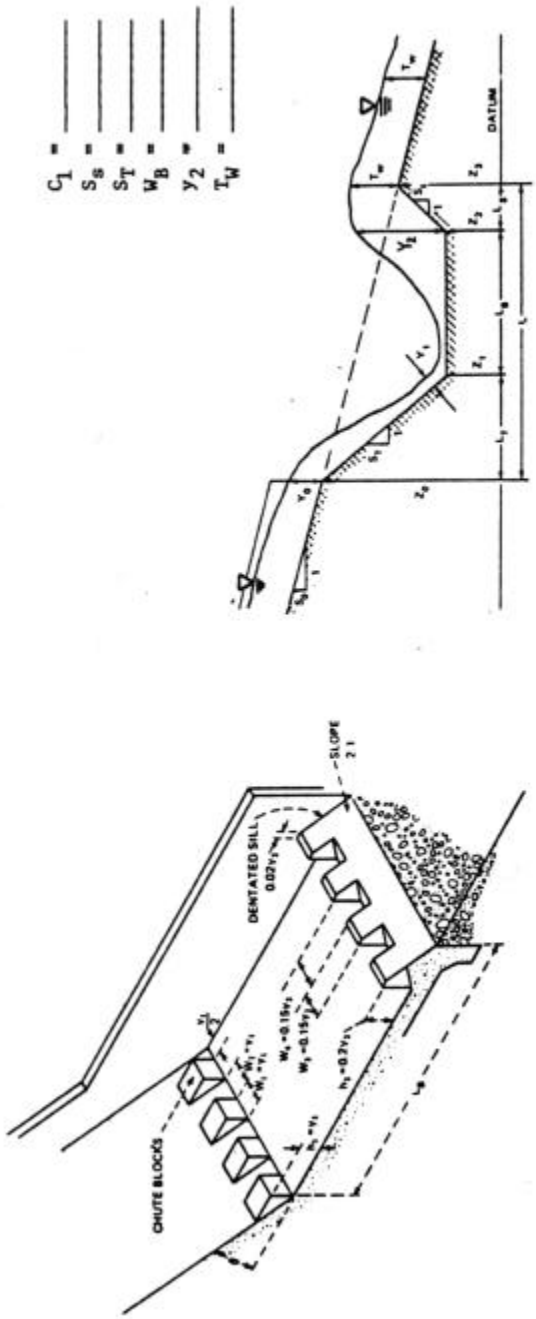

If $y_2 > T_W$, Depress Basin

$Z_1 = Z_2$	y_1	V_1	Fr_1	y_2	L_B	L_T	Z_3	$y_2 + Z_2$ (1)	$Z_3 + T_W$ (1)
L_S	L	W_1	h_1	N_c	h_2	W_3	W_4	N_s	

(1) $Z_3 + T_W \geq y_2 + Z_2$

Reference: USDOT, FHWA, HEC-14 (1983).

Table 10-5
USBR Type II Basin Computation Form

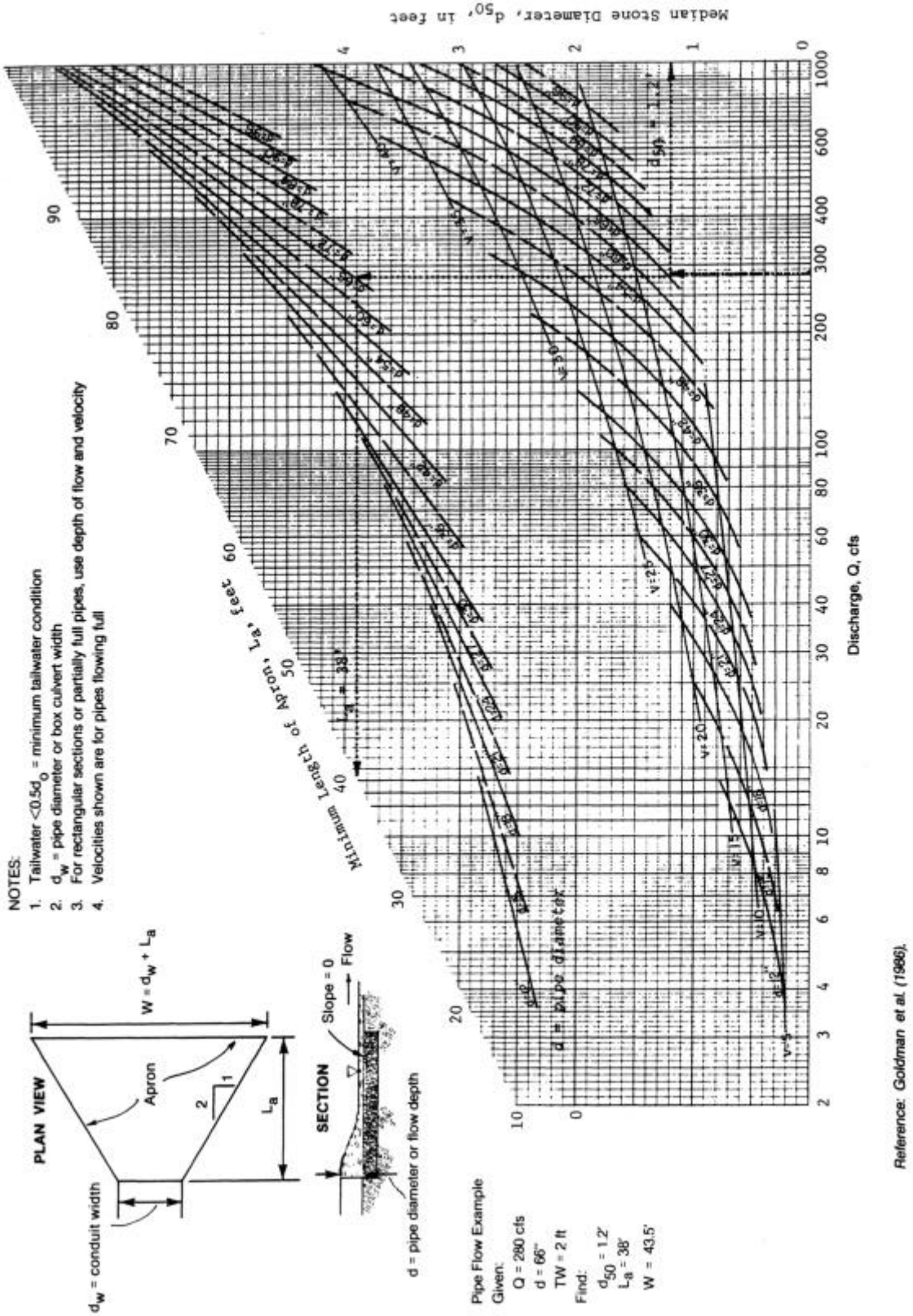

Figure 10-1
Design of Riprap Apron under Minimum Tailwater Conditions

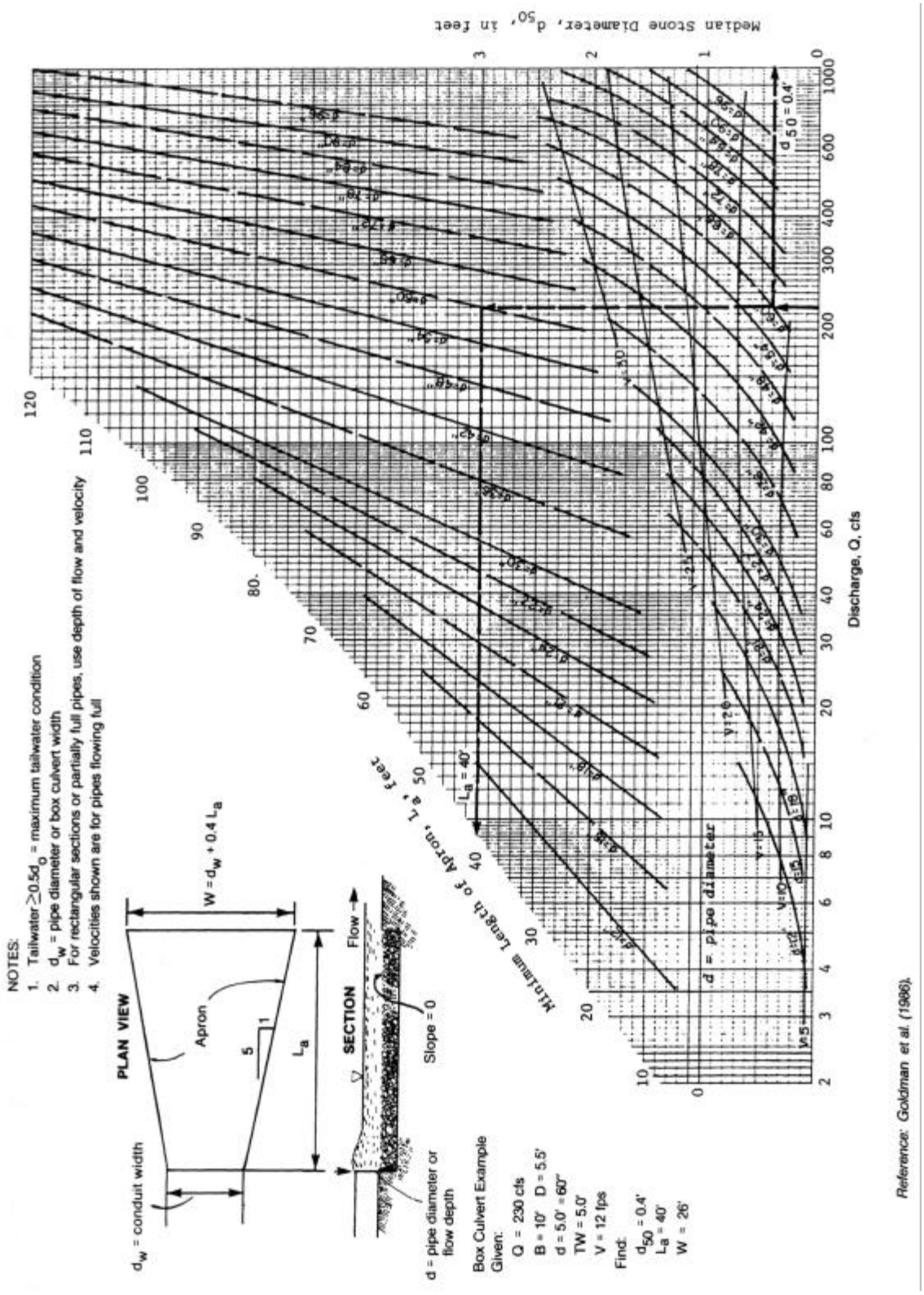

Figure 10-2
Design of Riprap Apron under Maximum Tailwater Conditions

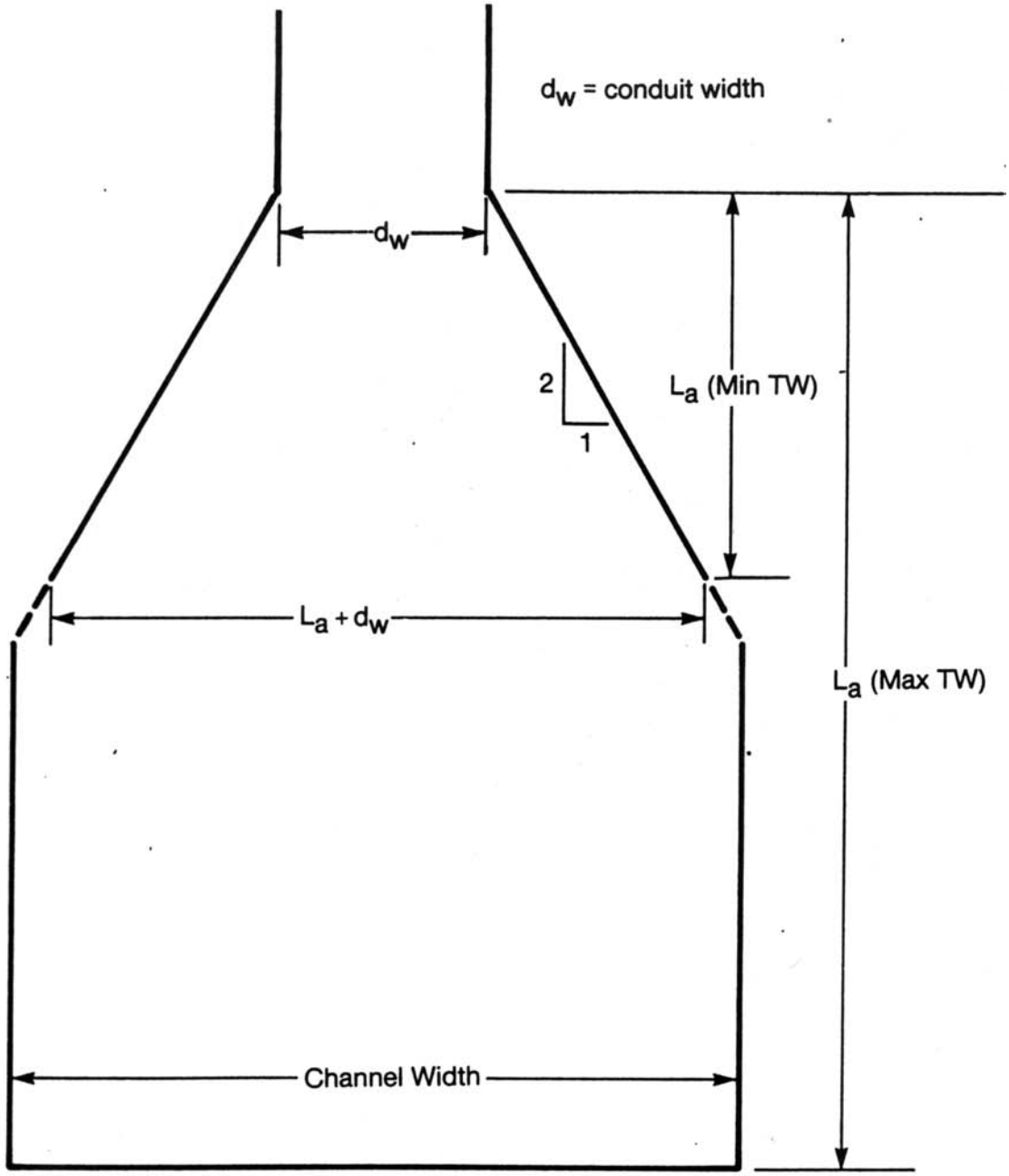

Figure 10-3
Riprap Apron Schematic for Uncertain Tailwater Conditions

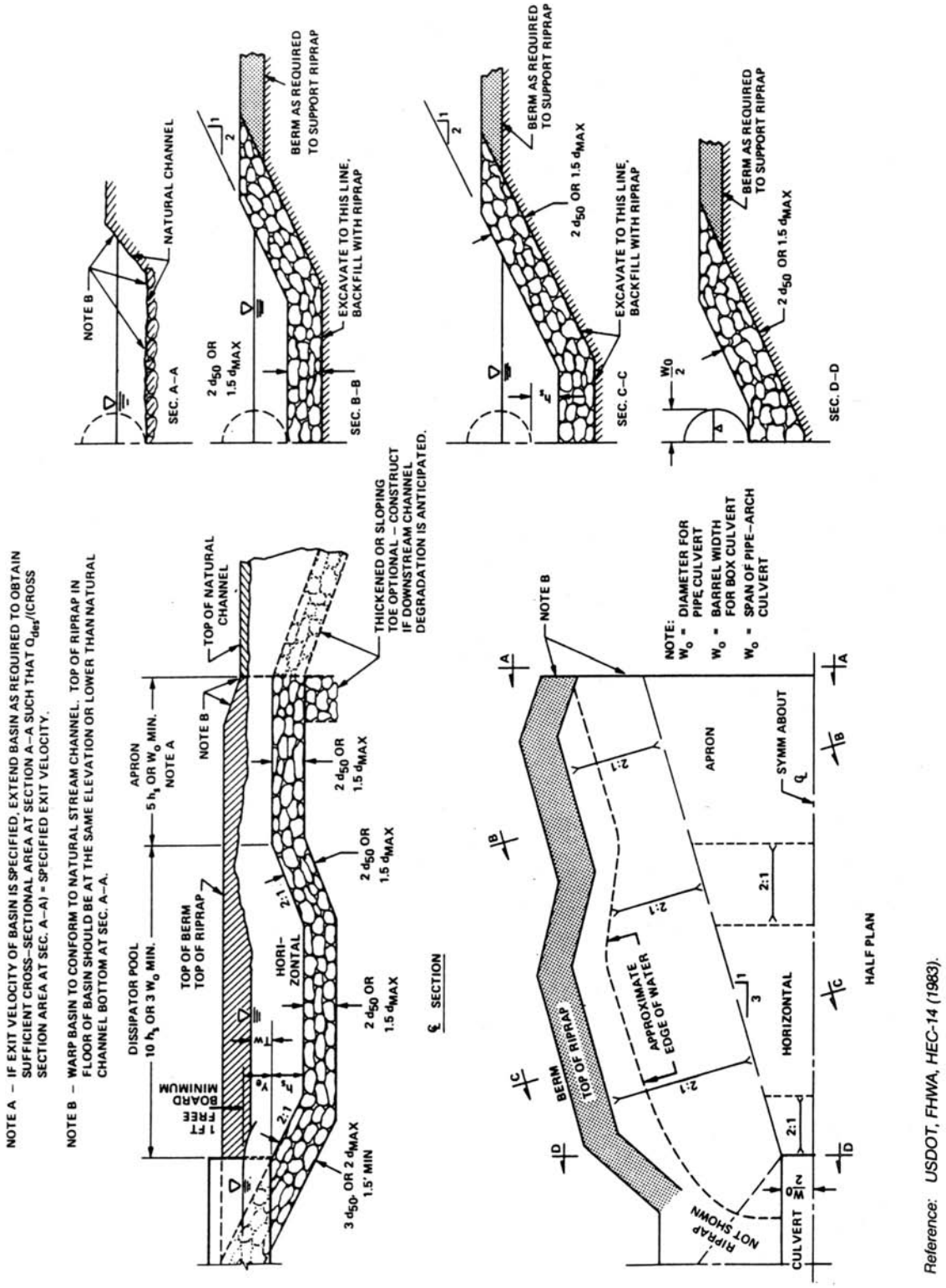

Reference: USDOT, FHWA, HEC-14 (1983).

Figure 10-4
Details of Riprap Outlet Basin

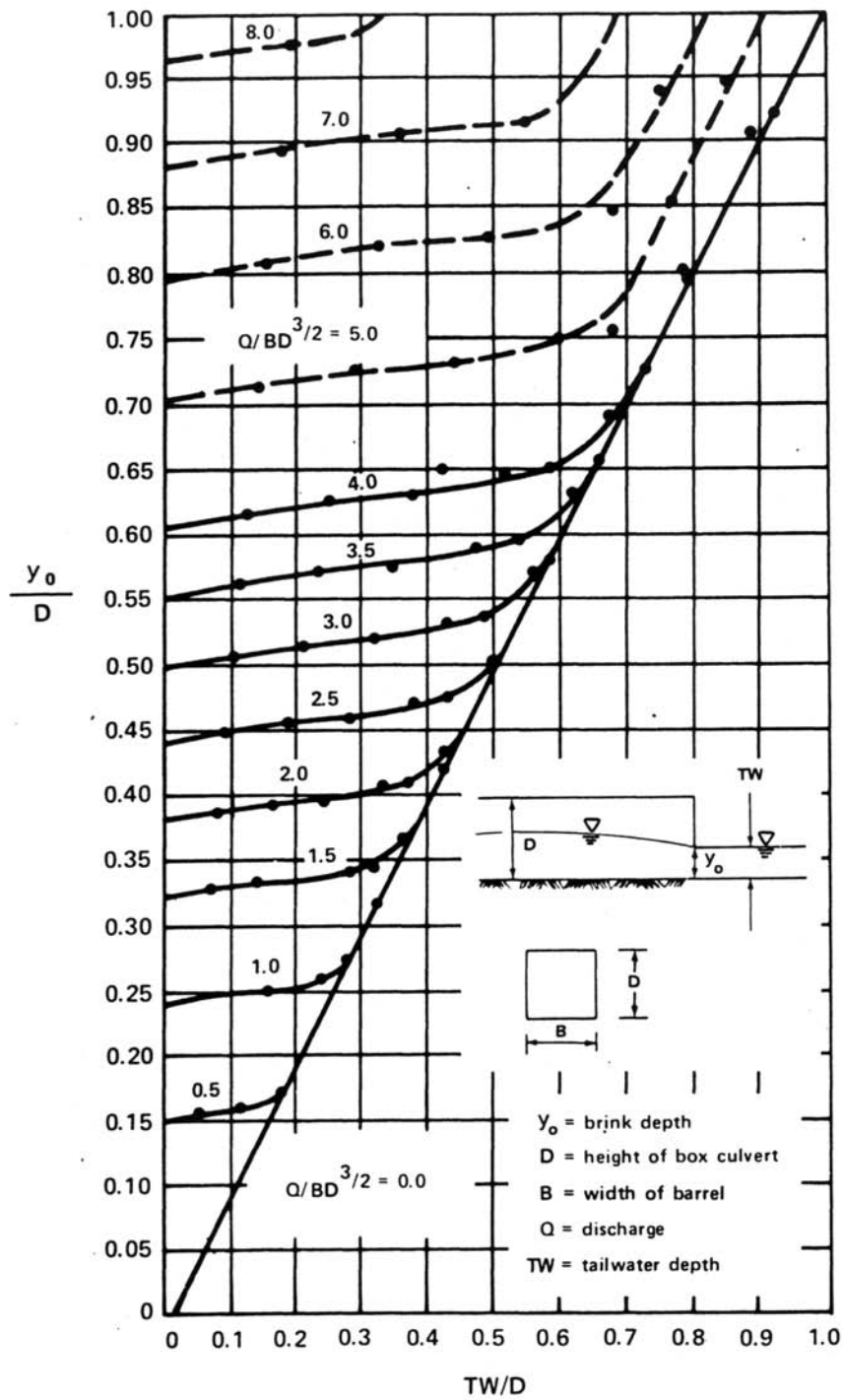

Reference: USDOT, FHWA, HEC-14 (1983).

Figure 10-5
Dimensionless Rating Curves for the Outlets of Rectangular Culverts on Horizontal and Mild Slopes

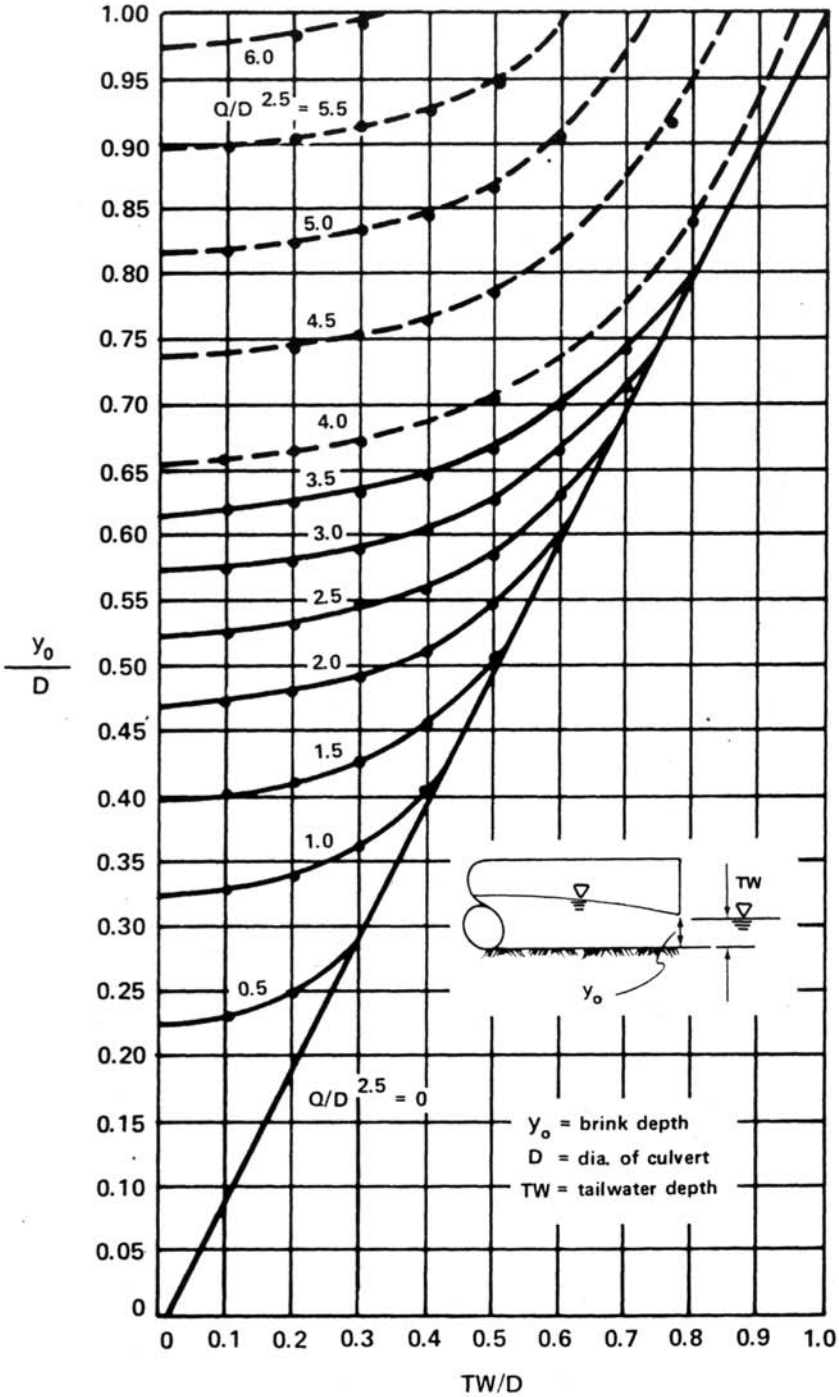

Reference: USDOT, FHWA, HEC-14 (1983).

Figure 10-6
Dimensionless Rating Curves for the Outlets of Circular Culverts on Horizontal and Mild Slopes

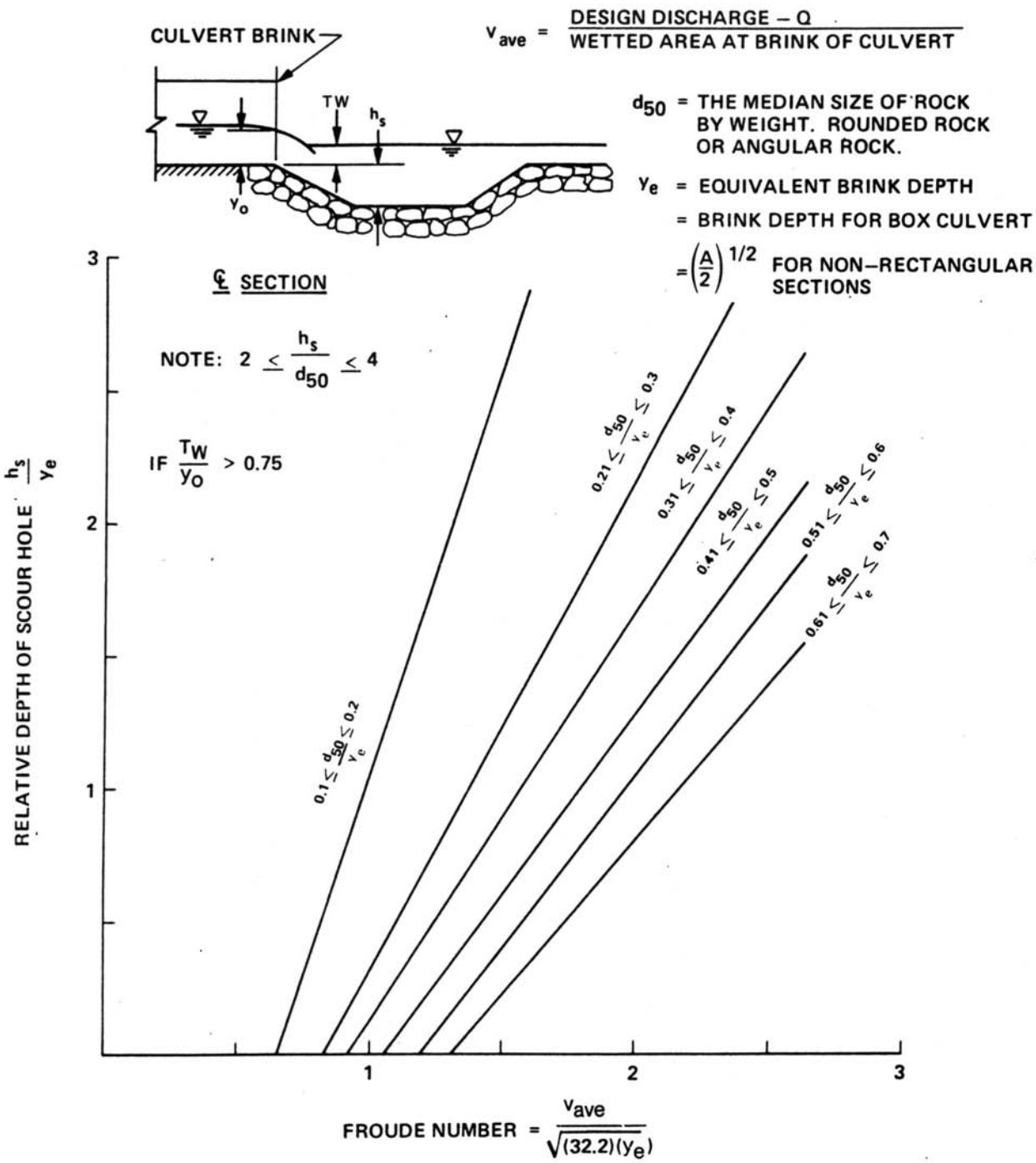

Reference: USDOT, FHWA, HEC-14 (1983).

Figure 10-7
Relative Depth of Scourhole vs. Froude Number at
Brink of Culvert with Relative Size of Riprap as a Third Variable

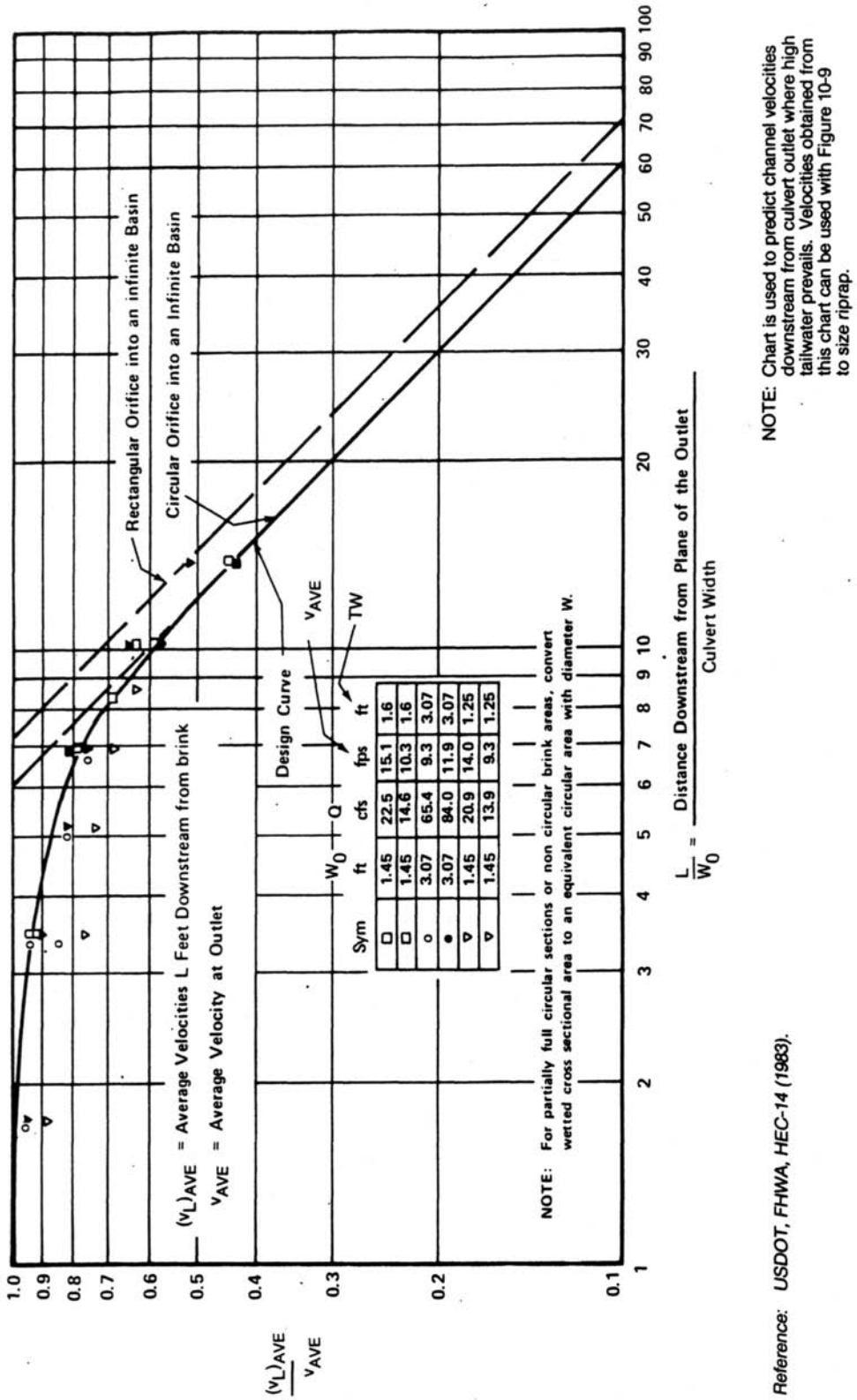

Sym	W_0 ft	Q cfs	fps	ft
□	1.45	22.5	15.1	1.6
□	1.45	14.6	10.3	1.6
○	3.07	65.4	9.3	3.07
●	3.07	84.0	11.9	3.07
▽	1.45	20.9	14.0	1.25
▽	1.45	13.9	9.3	1.25

Figure 10-8
Distribution of Centerline Velocity for Flow from Submerged Outlets

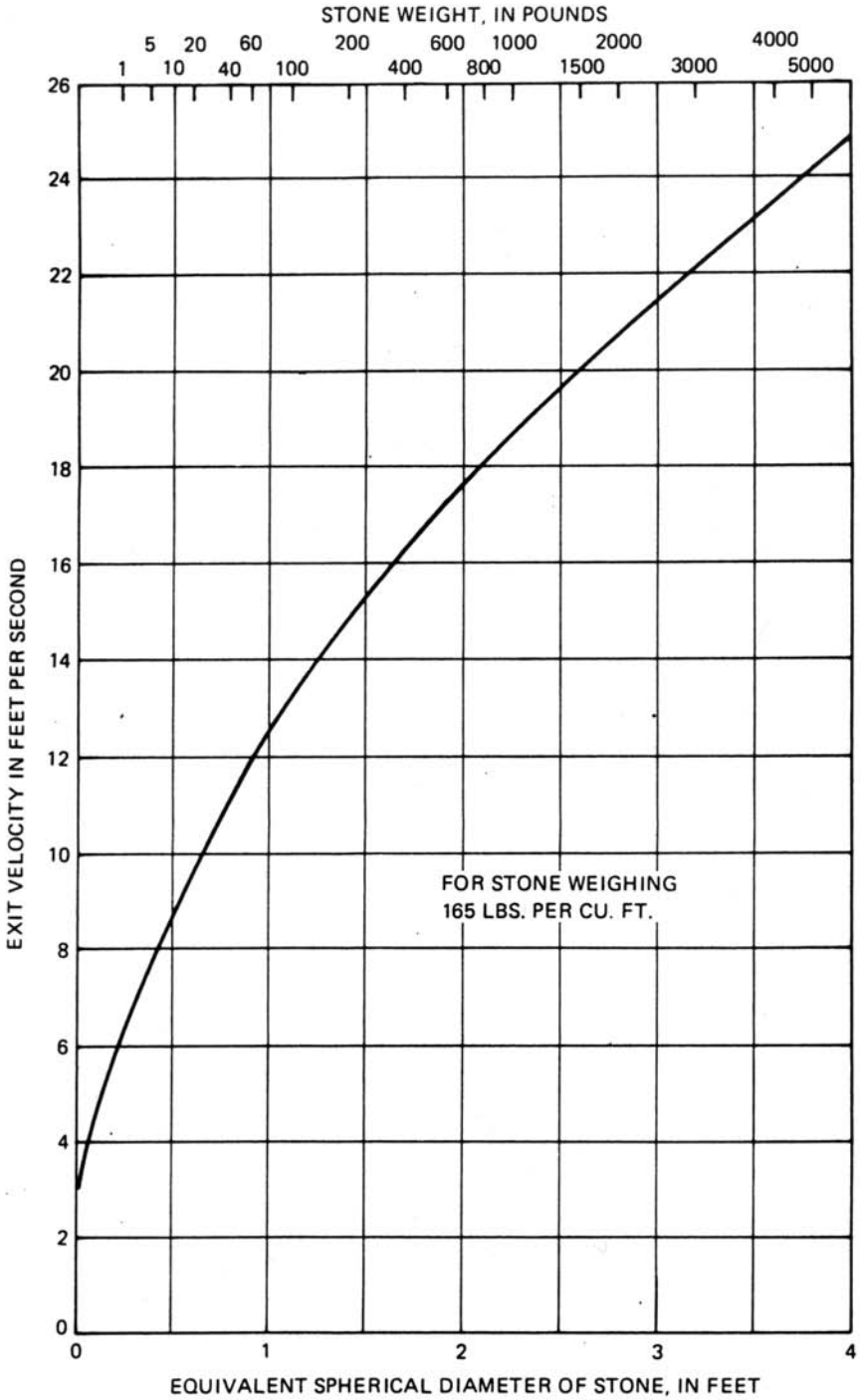

Reference: USDOT, FHWA, HEC-14 (1983).

Figure 10-9
Riprap Size for Protection Downstream of Outlet Basins

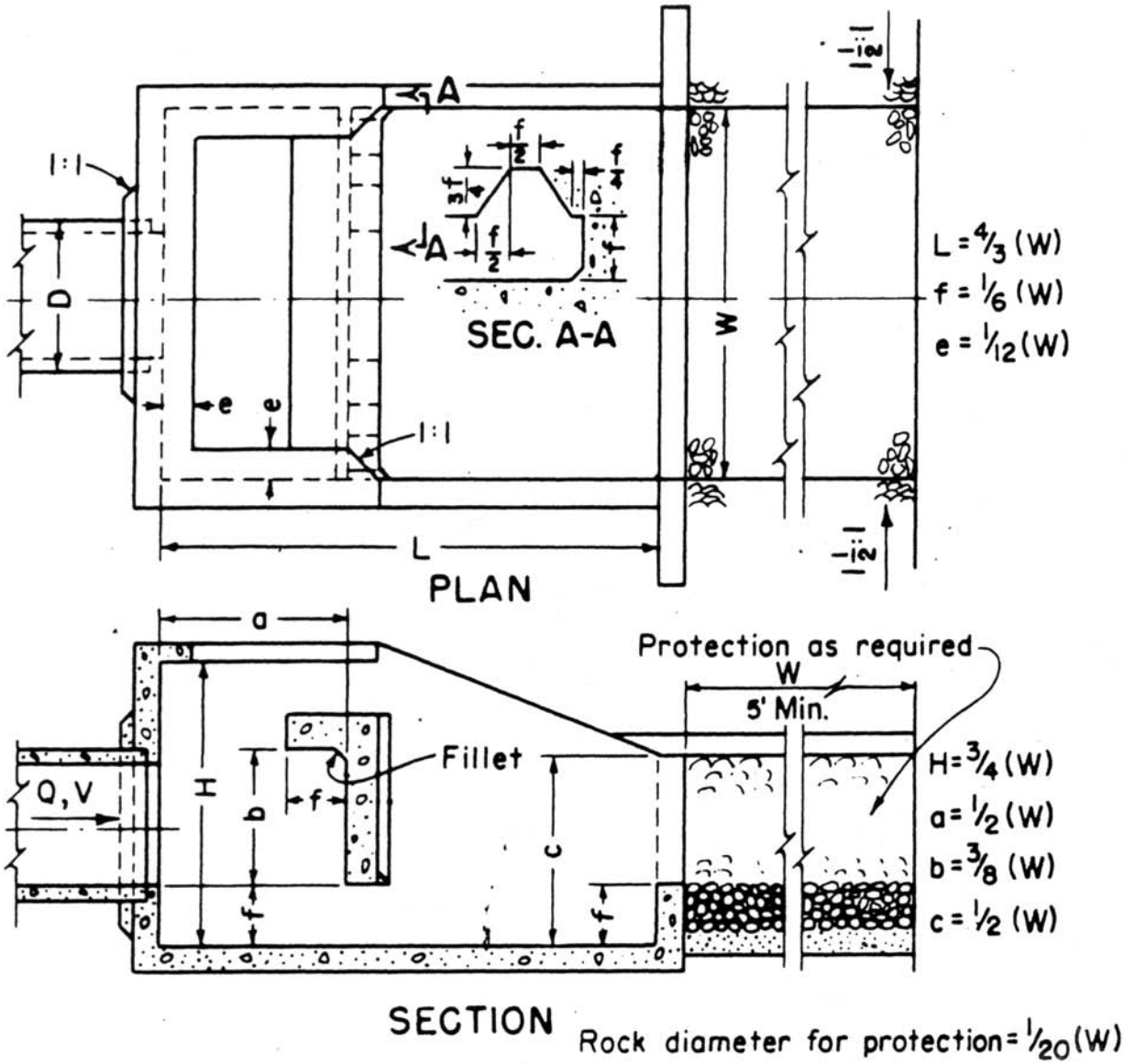

Reference: U.S. Department of the Interior (1978).

Figure 10-10
Schematic of Baffled Outlet

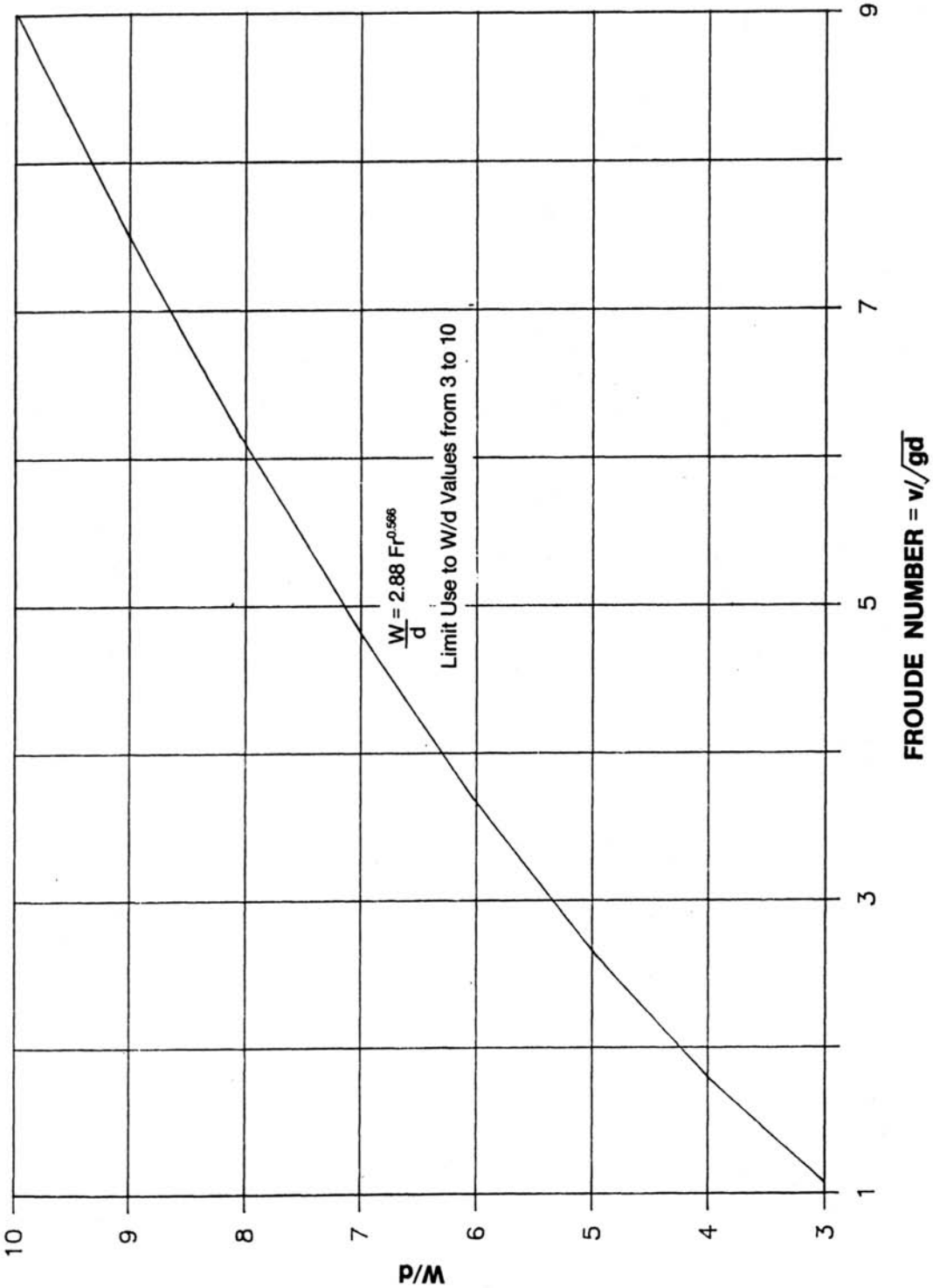

Reference: U.S. Department of the Interior (1978).

Figure 10-11
W/d vs. Froude Number for Baffled Outlet Basins

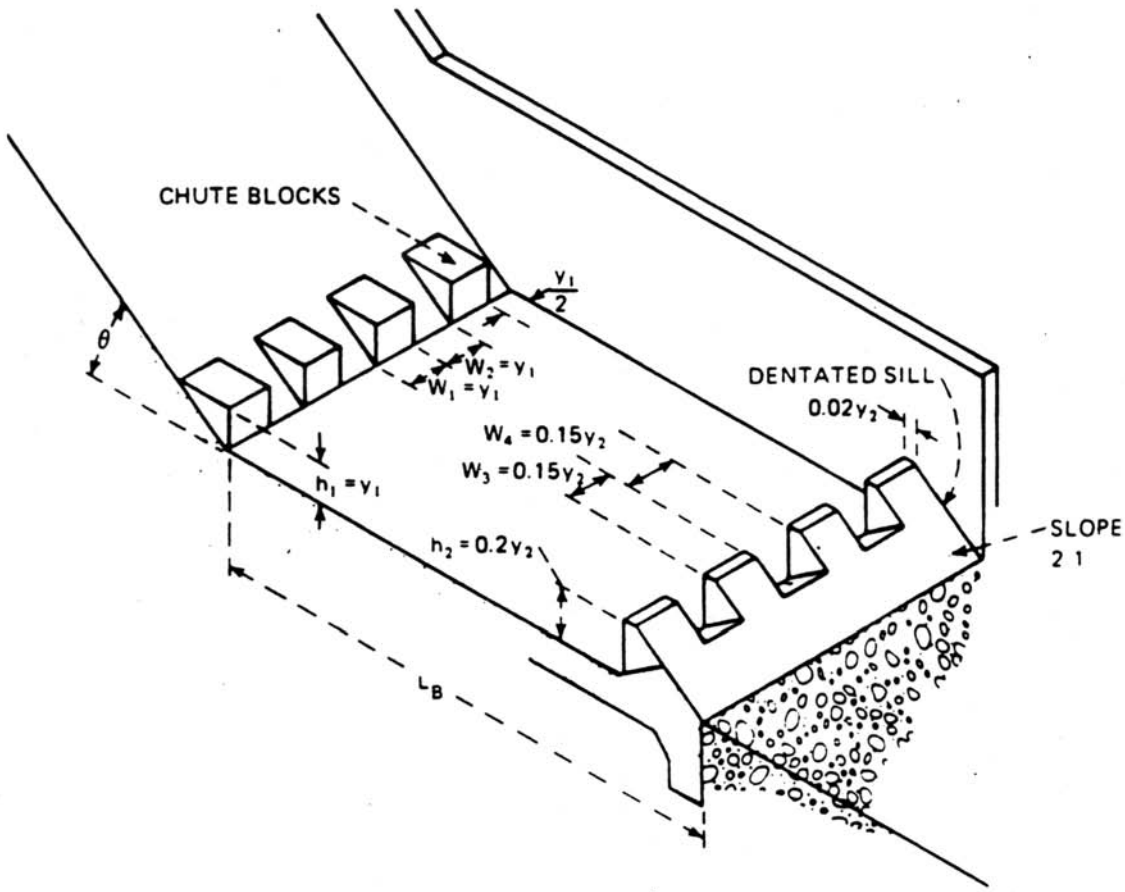

Reference: USDOT, FHWA, HEC-14 (1983).

Figure 10-12
USBR Type II Outlet Basin

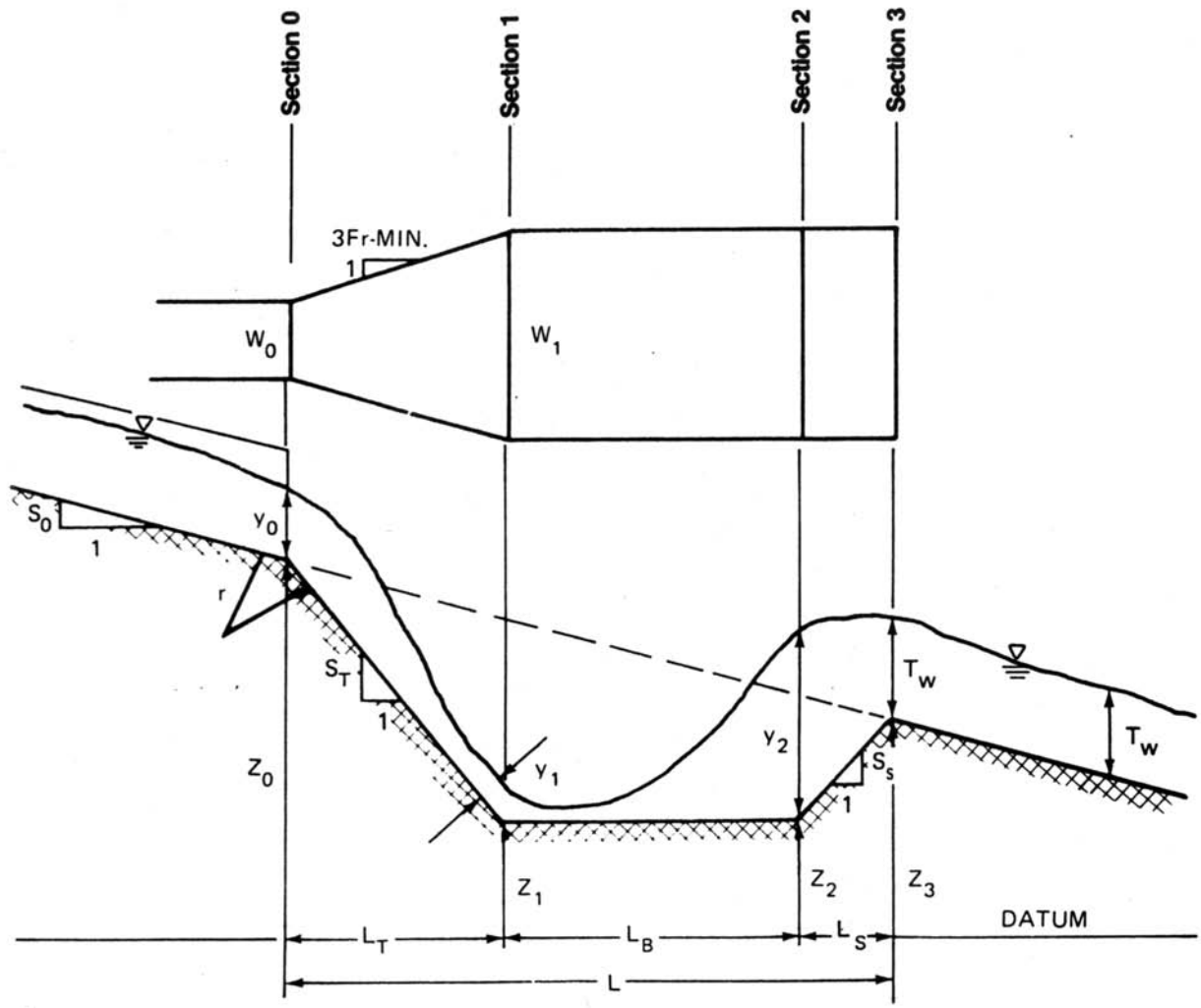

Reference: USDOT, FHWA, HEC-14 (1983).

Figure 10-13
Definition Sketch of Supercritical Flow Expansions

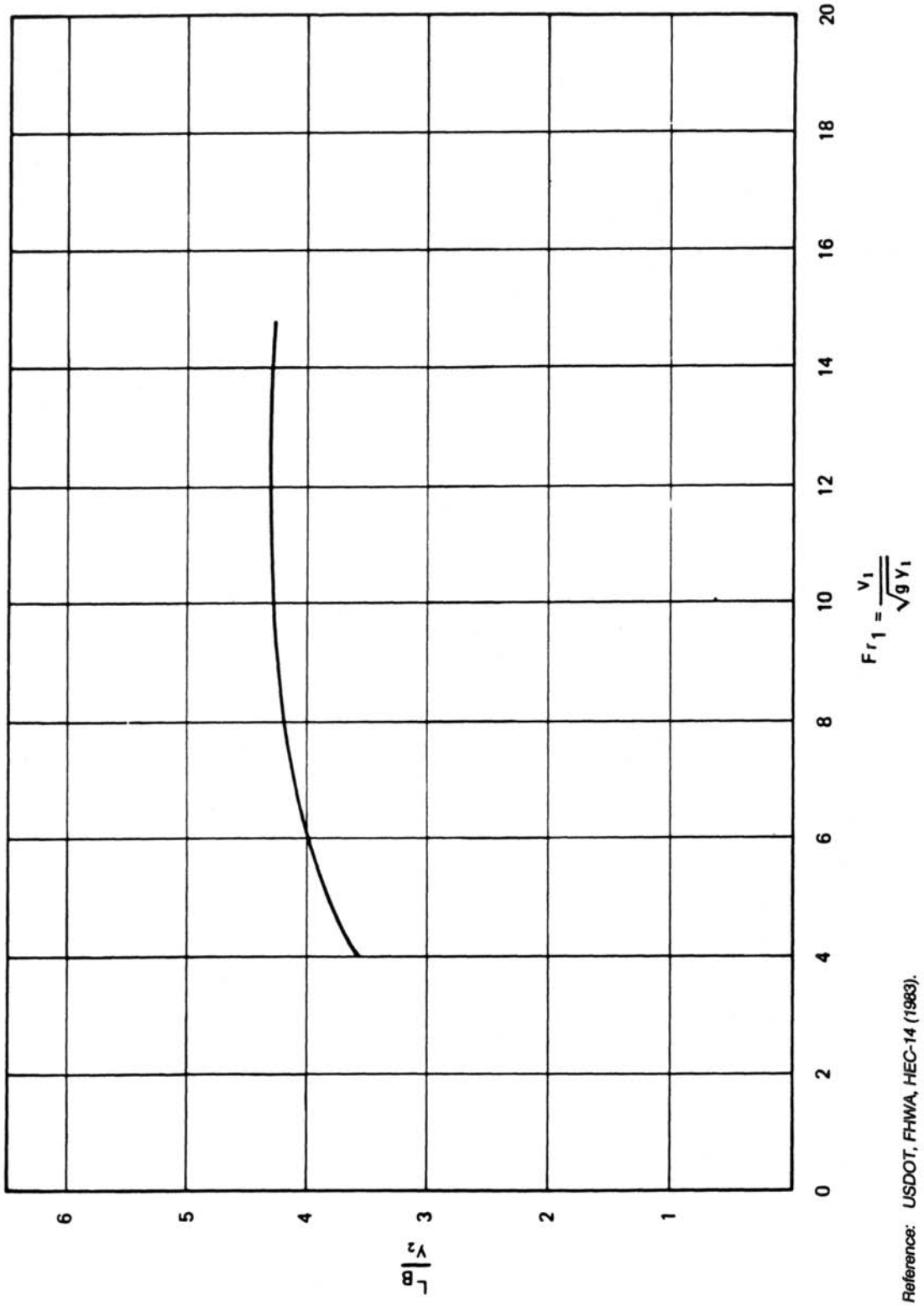

Figure 10-14
Length of Jump on Horizontal Floor
for USBR Type II Outlet Basin

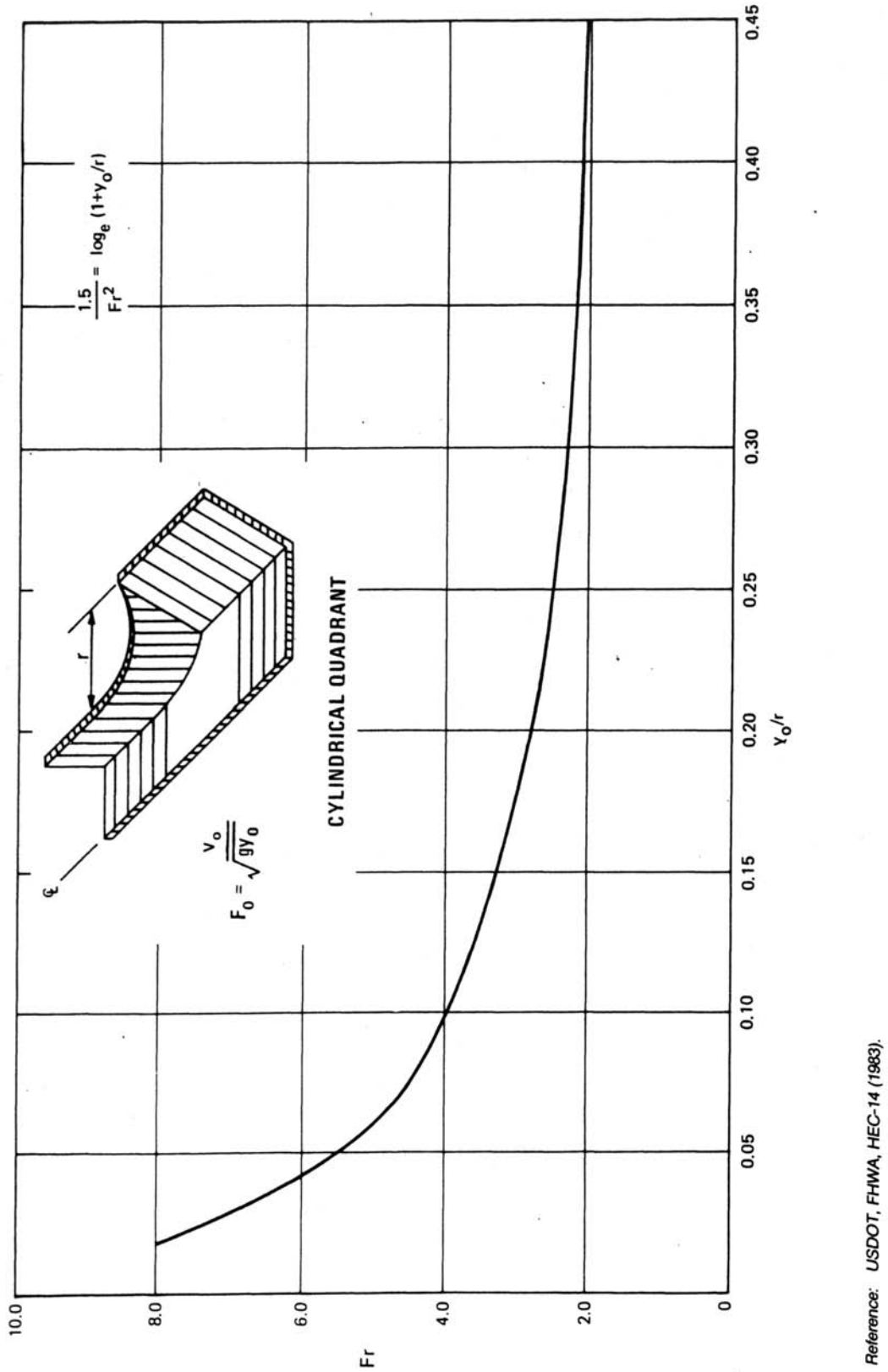

Reference: USDOT, FHWA, HEC-14 (1983).

Figure 10-15
Fr vs. y_o/r for Flow Transitions

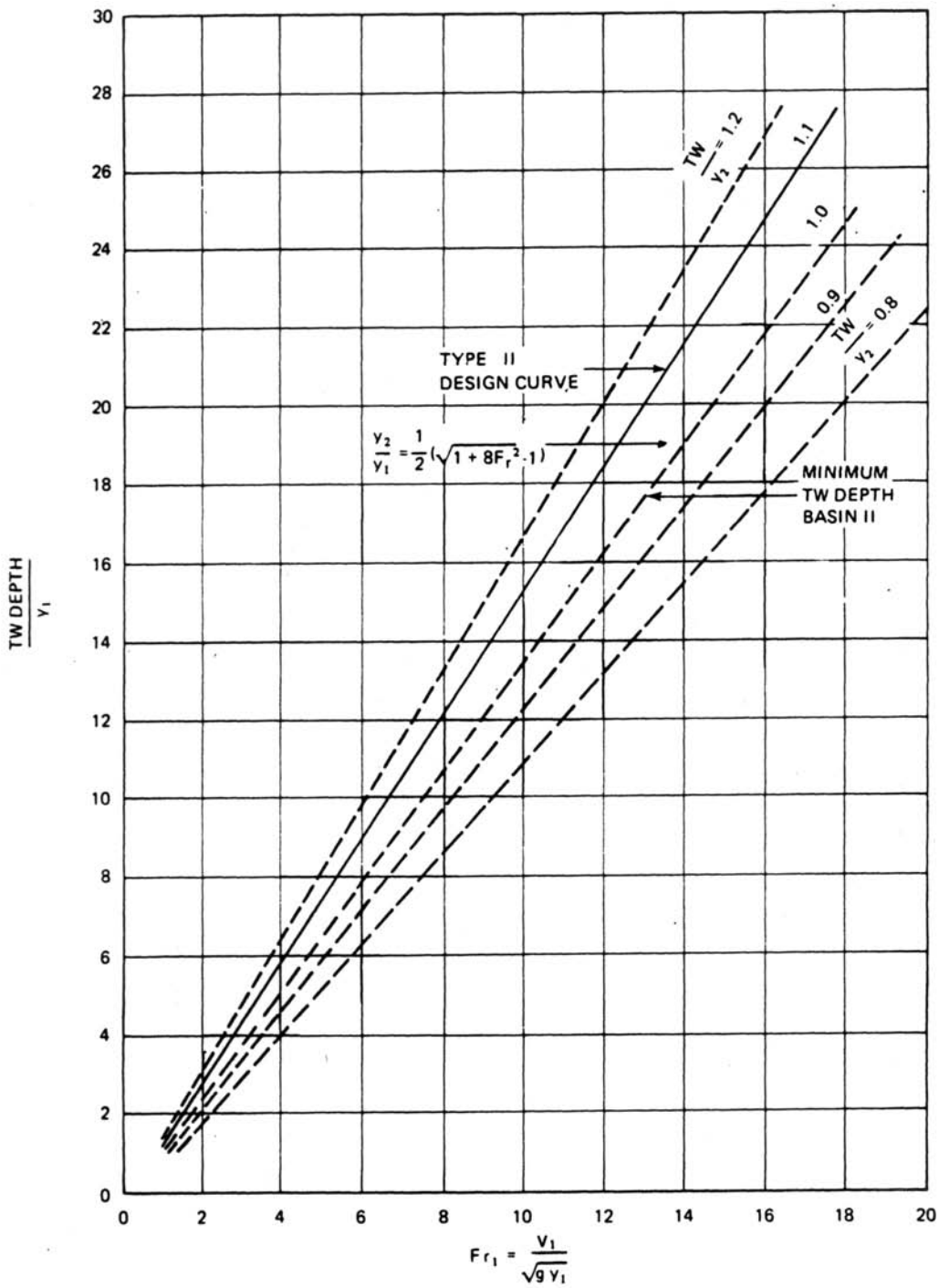

Reference: USDOT, FHWA, HEC-14 (1983).

Figure 10-16
Tailwater Depth for USBR Type II Outlet Basin