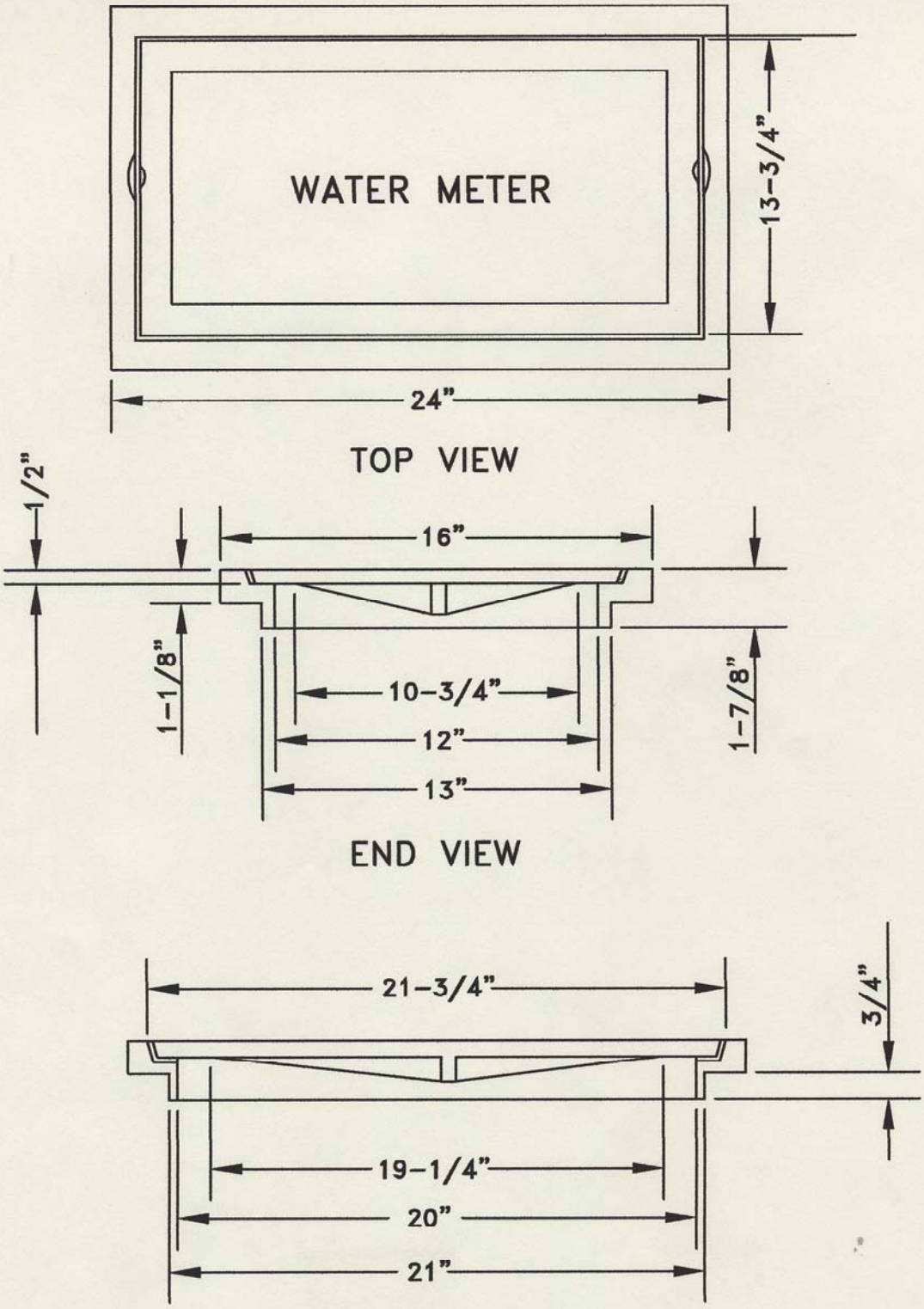

LIGHT DUTY

METRO WATER SERVICES

SMALL METER FRAME AND COVER

NOT TO SCALE	DATE: 7/7/04
DWG. NO. WDET015	

METRO WATER SERVICES

Hal Balthrop

LICENSED DISTRIBUTION OPERATOR

DIRECTOR OF WATER AND SEWERAGE SERVICES