KARL F. DEAN
MAYOR

METROPOLITAN GOVERNMENT OF NASHVILLE AND DAVIDSON COUNTY

Metropolitan Historic Zoning Commission
Sunnyside in Sevier Park
3000 Granny White Pike
Nashville, Tennessee 37204
Telephone: (615) 862-7970
Fax: (615) 862-7974

STAFF RECOMMENDATION
504 Fairfax Avenue
March 20, 2013

Application: New construction-addition of solar panels
District: Hillsboro-West End Neighborhood Conservation Zoning Overlay
Council District: 18
Map and Parcel Number: 10410019100
Applicant: LightWave Solar Electric, LLC., c/o Jon Paul Plumlee
Project Lead: Sean Alexander, sean.alexander@nashville.gov

Description of Project: The applicant is proposing to install forty (40) solar panels on the roof of a one-story contributing house. The panels will be on the front slope of the side-gabled roof, facing South. **Recommendation Summary:** Staff recommends approval of the roof mounted solar panels. Although the front roof plane would generally not be the preferred location for solar panels, the secondary slopes of this roof face north and the rear yard are covered by the shade of several mature trees. Because there is not another feasible location for the panels, because the panels add minimal height to the structure, and because they could be removed without impairing the form, staff finds them to meet guidelines II.B.1. and II.B.2.	**Attachments** **A:** Photographs **B:** Product Brochure

Vicinity Map:

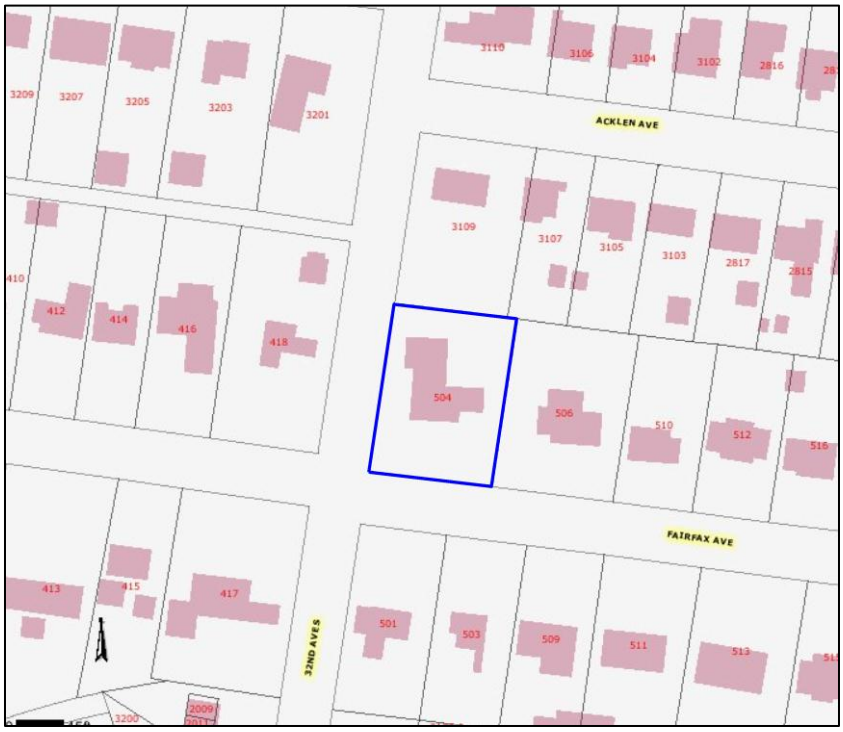

Aerial Map:

Applicable Design Guidelines:

II.B. GUIDELINES
1. New Construction

a. Height

The height of the foundation wall, porch roof(s), and main roof(s) of a new building shall be compatible, by not contrasting greatly, with those of surrounding historic buildings.

b. Scale

The size of a new building and its mass in relation to open spaces shall be compatible, by not contrasting greatly, with surrounding historic buildings.

c. Setback and Rhythm of Spacing

The setback from front and side yard property lines established by adjacent historic buildings should be maintained. Generally, a dominant rhythm along a street is established by uniform lot and building width. Infill buildings should maintain that rhythm.

d. Materials, Texture, Details, and Material Color

The materials, texture, details, and material color of a new building's public facades shall be visually compatible, by not contrasting greatly, with surrounding historic buildings. Vinyl and aluminum siding

e. Roof Shape

The roof(s) of a new building shall be visually compatible, by not contrasting greatly, with the roof shape, orientation, and pitch of surrounding historic buildings.

f. Orientation

The orientation of a new building's front facade shall be visually consistent with surrounding historic buildings.

g. Proportion and Rhythm of Openings

The relationship of width to height of windows and doors, and the rhythm of solids (walls) to voids (door and window openings) in a new building shall be compatible, by not contrasting greatly, with surrounding historic buildings.

2. ADDITIONS

a. Generally, an addition should be situated at the rear of a building in such a way that it will not disturb either front or side facades. To distinguish between the historic structure and an addition, it is desirable to set the addition in from the building side wall or for the addition to have a different exterior cladding. Additions normally not recommended on historic structures may be appropriate for non-historic structures in Hillsboro-West End. Front or side alterations to non-historic buildings that

increase habitable space or change exterior height should be compatible, by not contrasting greatly, with the adjacent historic buildings.

Placement

Additions should be located at the rear of an existing structure.
Connections to additions should, as much as possible, use existing window and door openings rather than remove significant amounts of rear wall material.
Generally rear additions should inset one foot, for each story, from the side wall.
Additions should be physically distinguished from the historic building and generally fit within the shadow line of the existing building.

In order to assure than an addition has achieved proper scale, the addition should generally be shorter and thinner than the existing building. Exceptions may be made when unusual constraints make these parameters unreasonable, such as:

- *An extreme grade change*
- *Atypical lot parcel shape or size*

In these cases, an addition may rise above <u>or</u> extend wider than the existing building; however, generally the addition should not higher <u>and</u> extend wider.

When an addition needs to be taller:
Whenever possible, additions should not be taller than the historic building; however, when a taller addition is the only option, additions to single story structures may rise as high as 4' above the shadow line of the existing building at a distance of 40' from the front edge of the existing building. In this instance, the side walls and roof of the addition must set in as is typical for all additions. The portion of the roof that can be seen should have a hipped, side gable or clipped gable roof to help decrease the visual mass of the addition.

b. When a lot width exceeds 60 feet or the standard lot width on the block, it may be appropriate to add a side addition to a historic structure. The addition should set back from the face of the historic structure and should be subservient in height, width and massing to the historic structure.

The addition should set back from the face of the historic structure (at or beyond the midpoint of the building) and should be subservient in height, width and massing to the historic structure.
Side additions should be narrower than half of the historic building width and exhibit a height of at least 2' shorter than the historic building.
To deemphasize a side addition, the roofing form should generally be a hip or side-gable roof form.

c. The creation of an addition through enclosure of a front porch is not appropriate. The creation of an addition through the enclosure of a side porch may be appropriate if the addition is constructed in such a way that original form and openings on the porch remain visible and undisturbed.

d. Contemporary designs for additions to existing properties are not discouraged when such additions do not destroy significant historical, architectural, or cultural material; and when such design is compatible, by not contrasting greatly, with the size, scale, color, material, and character of the property, neighborhood, or environment.

e. A new addition should be constructed in such a manner that if the addition were to be removed in the future, the essential form and integrity of the original structure would be unimpaired.

Connections should, as much as possible, use existing window and door openings rather than remove significant amounts of rear wall material.

f. Additions should follow the guidelines for new construction.

Background: The building at 504 Fairfax Avenue is a one-story brick, Colonial Revival style house, constructed circa 1950. Although it was listed as non-contributing in a 1993 National Register survey of the district, it has since acquired contributing status.

Analysis and Findings: The applicant proposes to install forty (40) photovoltaic solar panels on the front, south facing slope of the house. The panels will be "flush mounted," matching the pitch of the existing roof. Each panel will be twenty-four by sixty inches (24"x60"), and with the mounting hardware they will cover an area thirteen feet, six inches (13'-6") by forty-one feet, six inches (41'-6"). The panels will be black, against the existing dark gray asphalt shingle roof. This color is compatible with surrounding roofs and meets guideline II.B.1.d. Because of the low-profile installation, staff finds that the solar panel system will be compatible with the height and character of the house, and will meet guideline II.B.1.a.

The meter and AC disconnect switch will be located adjacent to the existing billing meter. The inverter will be located in the basement. The panels will have minimal impact on the historic home, retaining the original form and existing materials.

Preferably, solar panels would be installed on a secondary or side-facing roof plane, or on the roof of an accessory building. However, the front slope of the roof is the only available location that would not be shaded by several large trees nearby. Installation of the solar panels will have a minimal effect on the historic home as there are few penetrations and the system can easily be removed without affecting the historic form. Staff finds that this is a compatible addition under guideline II.B.1.

Recommendation:
Staff recommends approval of the application to install solar panels on the front slope of the roof of 504 Fairfax Avenue, finding the proposal to meet guidelines II.B.1 and II.B.2, and that the appearance and location will have minimal effect on the form of the historic house.

504 Fairfax Avenue, Front.

View from corner of Fairfax Avenue and 32nd Avenue South.

The Claytons	9,200 watts |DC Power	LIGHTWAVE SOLAR ELECTRIC, LLC	A-1
Solar Photovoltaic System	40 modules		
System Design			

SUNPOWER™

E18/230 SOLAR PANEL

18% EFFICIENCY

SunPower's signature black™ panels provide the highest efficiency for their product class and a sleek, black appearance

MAXIMUM SYSTEM OUTPUT

Comprehensive inverter compatibility ensures that customers can pair the highest-efficiency panels with the highest-efficiency inverters, maximizing system output

REDUCED INSTALLATION COST

More power per panel means fewer panels per install. This saves both time and money.

RELIABLE AND ROBUST DESIGN

SunPower's unique Maxeon™ cell technology and advanced module design ensure industry-leading reliability

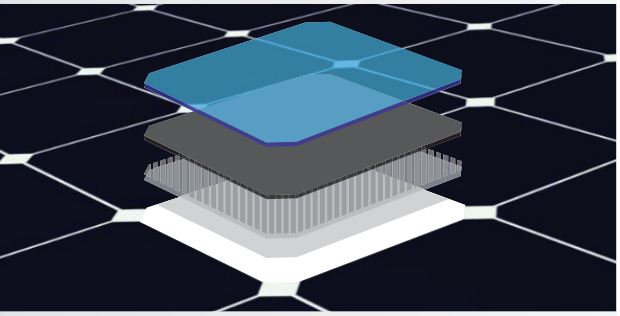

MAXEON™ CELL TECHNOLOGY

Patented all-back-contact solar cell, providing the industry's highest efficiency and reliability.

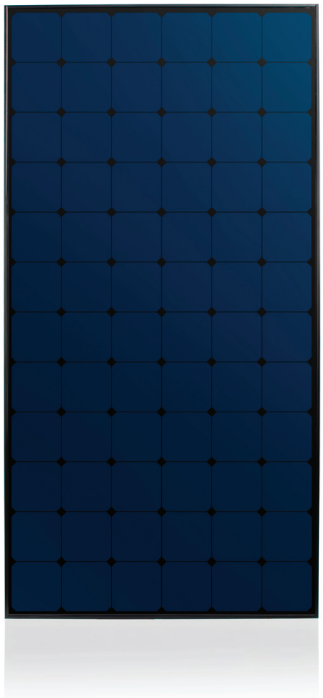

E18 SERIES

THE WORLD'S STANDARD FOR SOLAR™

SunPower™ E18 Solar Panels provide today's high efficiency and performance. Powered by SunPower Maxeon™ cell technology, the E18 series provides panel conversion efficiencies of up to 18.5%. The E18's low voltage temperature coefficient and exceptional low-light performance attributes provide outstanding energy delivery per peak power watt.

SUNPOWER'S HIGH EFFICIENCY ADVANTAGE

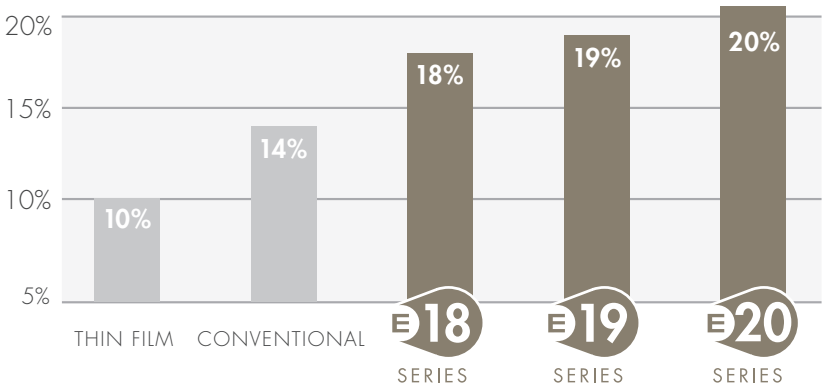

sunpowercorp.com

c UL us

SUNPOWER™ E18/230 SOLAR PANEL

MODEL: SPR-230NE-BLK-D

ELECTRICAL DATA

Measured at Standard Test Conditions (STC): irradiance of 1000W/m², AM 1.5, and cell temperature 25° C

Peak Power (+5/-3%)	P_{max}	230 W
Cell Efficiency	η	22.7 %
Panel Efficiency	η	18.5 %
Rated Voltage	V_{mpp}	40.5 V
Rated Current	I_{mpp}	5.68 A
Open-Circuit Voltage	V_{oc}	48.2 V
Short-Circuit Current	I_{sc}	6.05 A
Maximum System Voltage	UL	600 V
Temperature Coefficients	Power (P)	– 0.38%/K
	Voltage (V_{oc})	–132.5 mV/K
	Current (I_{sc})	3.5 mA/K
NOCT		46° C +/–2° C
Series Fuse Rating		20 A
Grounding	Positive grounding not required	

I-V CURVE

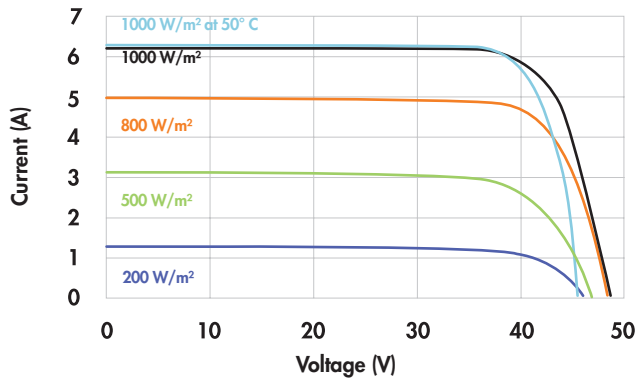

Current/voltage characteristics with dependence on irradiance and module temperature.

MECHANICAL DATA

Solar Cells	72 SunPower Maxeon™ cells
Front Glass	High-transmission tempered glass
Junction Box	IP-65 rated with 3 bypass diodes Dimensions: 32 x 155 x 128 mm
Output Cables	1000 mm cables / MC4 compatible connectors
Frame	Anodized aluminum alloy type 6063 (black)
Weight	33.1 lbs. (15.0 kg)

TESTED OPERATING CONDITIONS

Temperature	– 40° F to +185° F (– 40° C to + 85° C)
Max load	113 psf 550 kg/m² (5400 Pa), front (e.g. snow) w/specified mounting configurations 50 psf 245 kg/m² (2400 Pa) front and back (e.g. wind)
Impact Resistance	Hail: (25 mm) at 51mph (23 m/s)

WARRANTIES AND CERTIFICATIONS

Warranties	25-year limited power warranty
	10-year limited product warranty
Certifications	Tested to UL 1703. Class C Fire Rating

DIMENSIONS

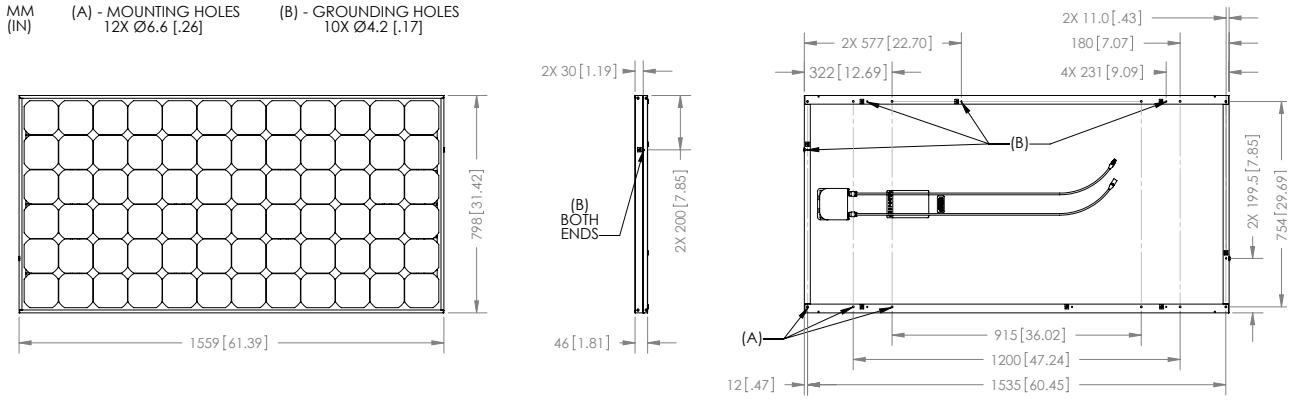

Please read safety and installation instructions before using this product, visit sunpowercorp.com for more details.

© 2012 SunPower Corporation. SUNPOWER, the SunPower Logo, and THE WORLD'S STANDARD FOR SOLAR, and MAXEON are trademarks or registered trademarks of SunPower Corporation in the US and other countries as well. All Rights Reserved. Specifications included in this datasheet are subject to change without notice.

UNIRAC®

THE STANDARD IN PV MOUNTING STRUCTURES™

Flush Mount

Low Profile

High Profile

PV's Most Versatile Mounting System

SOLARMOUNT®

www.unirac.com

SolarMount is much more than a product.

It's a system of engineered components that can be assembled into a wide variety of PV mounting structures. With SolarMount you'll be able to solve virtually any PV module mounting challenge.

It's also a system of technical support: complete installation and code compliance documentation, an on-line SolarMount Estimator, person-to-person customer service, and design assistance to help you solve the toughest challenges.

Which is why SolarMount is PV's most widely used mounting system.

U.S. Des. Patent Nos. D496,248S, D496,249S. Other patents pending.

SolarMount®

PV's most versatile mounting system

SolarMount® Rail Options

SolarMount® HD

HD (heavy duty) rail adds the SolarMount advantage to PV PoleTops®, U-LAs (see separate data sheets), and custom applications that require long spans.

Standard SolarMount®

Standard rail gives you ultimate flexibility, including bottom mounting and tilt-up options.

SolarMount® Light

In flush mounted arrays, **easy handling SolarMount®** Light rail saves aluminum and expense without compromising structural integrity.

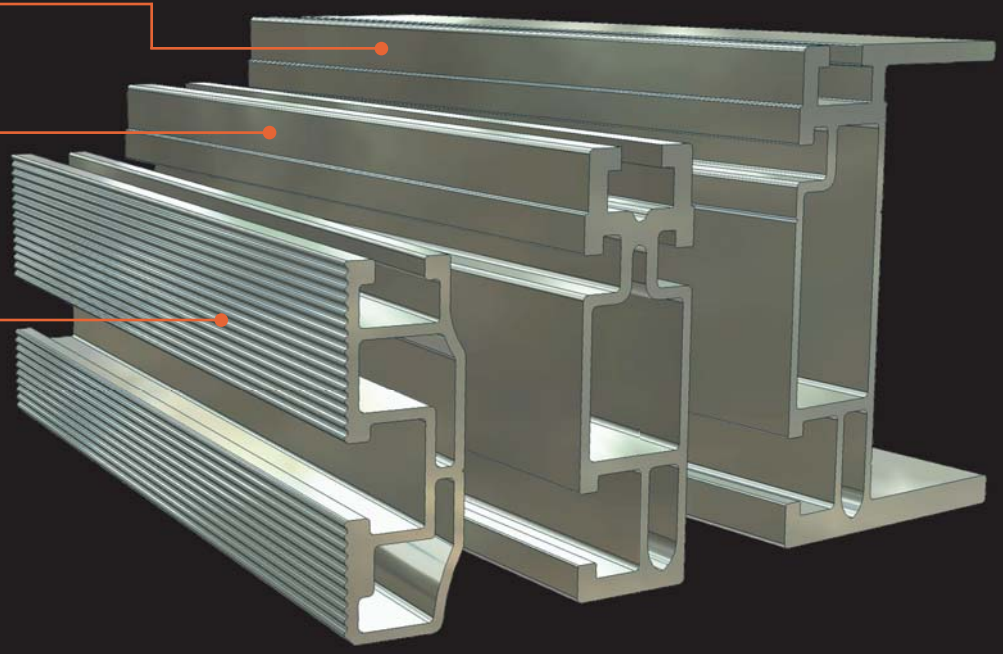

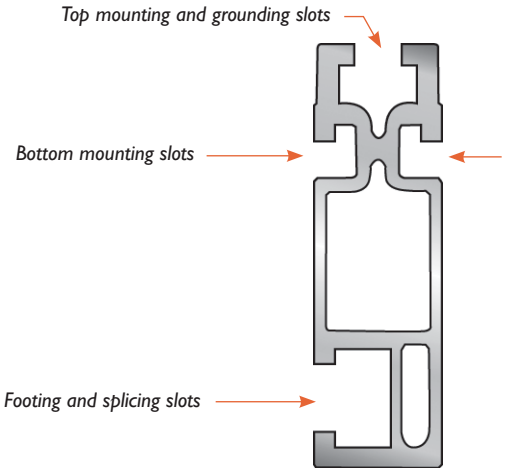

Splice Bars

In flush and low profile installations, securely join **SolarMount®** rail sections using rail footing slots.

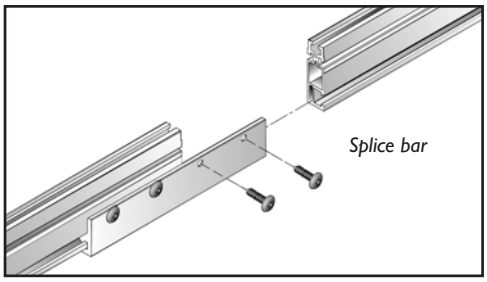

Module Mounting

Assembly Sequence Is Your Choice

Top mounting: Attach modules one-by-one to installed rails.

Bottom mounting: Preassemble full rows before final installation (standard and HD rail only).

Top Mounting Clamps

SolarMount T-bolts quickly mount your modules to any SolarMount rail from the top. This is ideal for flush mount applications, such as residential rooftops, where it is most convenient to secure footings and rails before installing modules. Clamps securely grip any point of the module frame, freeing you from the constraints of module mounting holes.

T-bolt

Bottom Mounting Clips

Use bottom mounting clips (standard and HD rail only) whenever you prefer to attach rails directly to the module mounting holes. Simply fit the clip into its rail slot over the mounting bolt for a secure connection. Adjust the clip position anywhere along the rail slot. Alignment of rails to module mounting holes is always easy and convenient.

Junction Plates

In shared-rail configurations (standard and HD rail only), attach modules with four-slot junction plates. North-south slots secure the rail to the plates. East-west slots secure a module on each side of the rail.

System Footing

Flexible Components Speed Installation

Secure footings bolt quickly and easily to footing bolt slots in any SolarMount® rail.

Standoffs

Use standoffs whenever flashed installations are required, on tile roofs, for example. Two-piece aluminum standoff allow precise placement of a flashing over a secured base prior to the installation of the standoff itself.

All standoff types come in four standard heights: 3, 4, 6, and 7 inches. Appropriate flashings are available.

Two-piece aluminum flat top

Steel raised flange

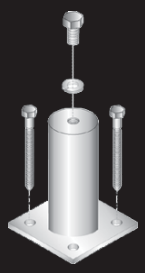

Steel flat top

L-feet

Standard for ground mount installations, L-feet mount rails to residential and commercial rooftops as well. Use them alone above asphalt composition shingles or in conjunction with flat top standoffs. Rail mounting holes are at two heights. In flush mounts, use the upper hole to raise the modules and promote air flow for cooling. Where aesthetics are the greater concern, use the lower hole to keep the modules close to the roof.

L-foot

Strut-in-Tube Style Legs

Quickly set the precise tilt angle required. Styles are available for **high profile** (1 or 2 legs per rail) and **low profile** installations. Each series offers three leg lengths so that you can adjust to exactly the tilt angle you want—up to a maximum of 60 degrees—without cutting and drilling at the job site.

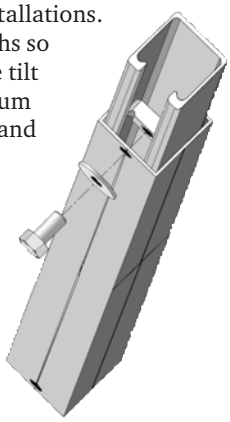

Strut-in-tube leg

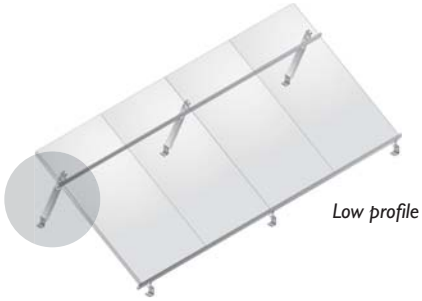

Low profile

High profile

Green-Fasten
Attachments secure, roof intact.

Roof Attachment Specialists
Attachments Secure — Roof Intact

Installing Green-Fasten on a Composition Shingle Roof

No need to remove any shingles if you can locate the rafters.

Tools Required:

- Drill, socket drive for lag bolt, tape measure, stud finder, chalk line, etc.

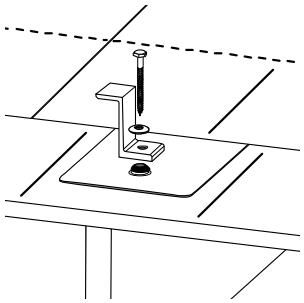

1. Locate the rafters and snap horizontal and vertical lines to mark the installation position for each Green-Fasten. Note: vertical location is for illustration only, generally items are not installed at the eave.
2. Center the Green-Fasten over the rafter.
3. Drill a pilot hole for the lag bolt.
4. Insert the flashing so the top part is under the next row of shingles and the hole lines up with the pilot hole.
5. Insert the lag bolt through the neoprene-bonded washer, the top compression component (Z-Bracket pictured) and the Gasketed hole in the flashing and into the rafter. The lag bolt should be tightened to approximately 97 inch pounds to ensure a watertight seal.

Consult an engineer or go to www.eco-fasten.com for engineering data.

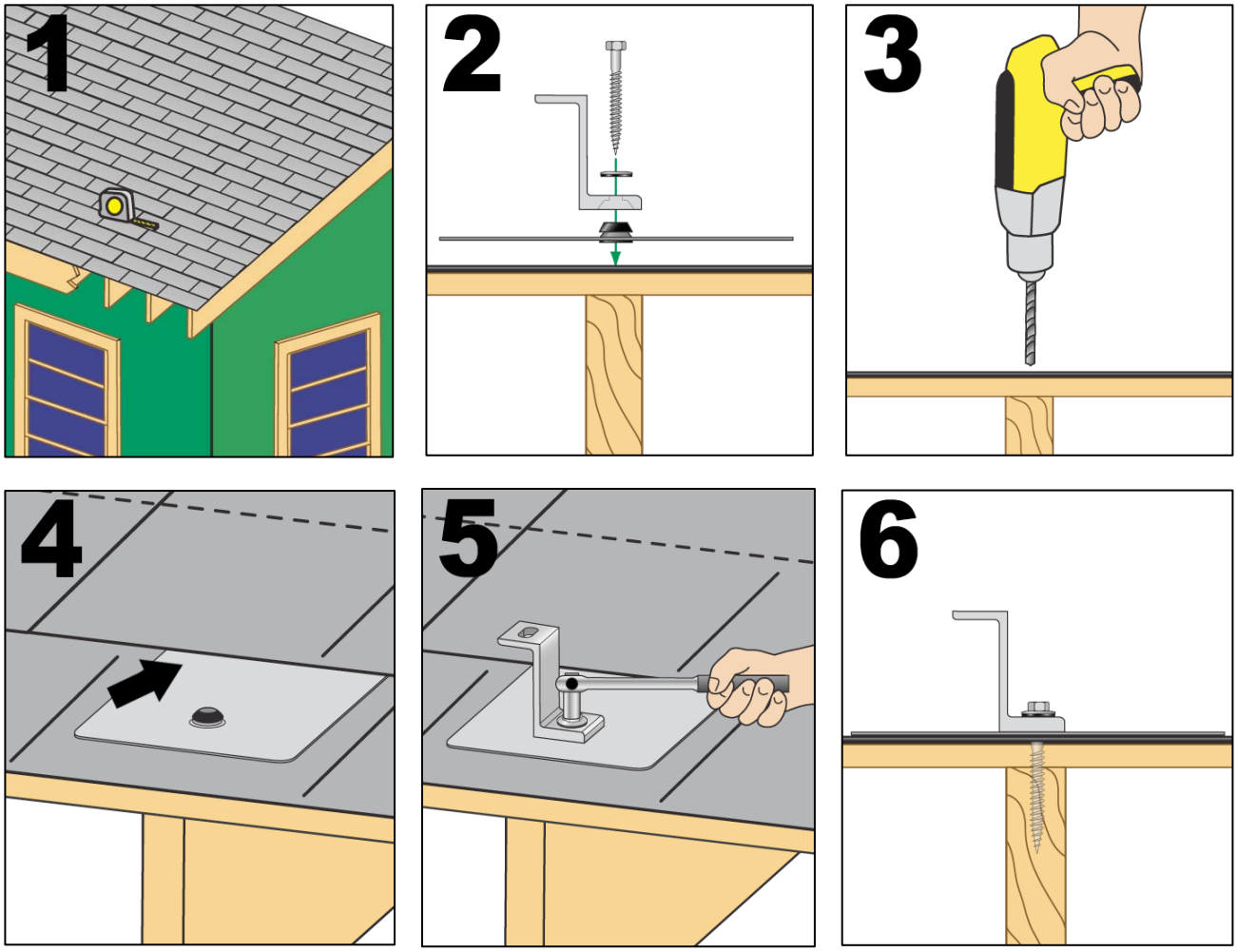

Document version: 04.22.2009

Eco-Fasten
289 Harrel Street ● Morrisville, VT 05661
Toll Free Phone 1.888.766.4273 ● Toll Free Fax 1.888.766.9994
E-mail info@eco-fasten.com

© Copyright 2009 Eco-Fasten, a division of Vermont Slate & Copper Services, Inc

SPS
Solar Panel Store
Everything you need to go Solar!
www.solarpanelstore.com

Made in Vermont, USA
from recycled materials