DAVID BRILEY
MAYOR

METROPOLITAN GOVERNMENT OF NASHVILLE AND DAVIDSON COUNTY

Metropolitan Historic Zoning Commission
Sunnyside in Sevier Park
3000 Granny White Pike
Nashville, Tennessee 37204
Telephone: (615) 862-7970
Fax: (615) 862-7974

STAFF RECOMMENDATION
300 Broadway
August 21, 2019

Application: Alterations—Exterior lighting
District: Broadway Historic Preservation Zoning Overlay
Council District: 19
Zoning: DTC
Map and Parcel Number: 09306308200
Applicant: Erica Garrison, Waller Lansden
Project Lead: Robin Zeigler, robin.zeigler@nashville.gov

Description of Project: The request is to change the color of building illumination of previously approved light fixtures from white-only to white or red and to approve colored illumination installed without a permit on the rooftop addition. **Recommendation Summary:** Staff recommends disapproval of the request to retain colored building illumination and recommends that the rooftop lighting, installed without a permit, be removed, finding that the proposal does not meet Section II.T. of the design guidelines for lighting in the Broadway Historic Preservation Zoning overlay.	**Attachments** **A:** Applicant's letter and application **B:** July 19, 2017 Staff Recommendation regarding building illumination policy

Vicinity Map:

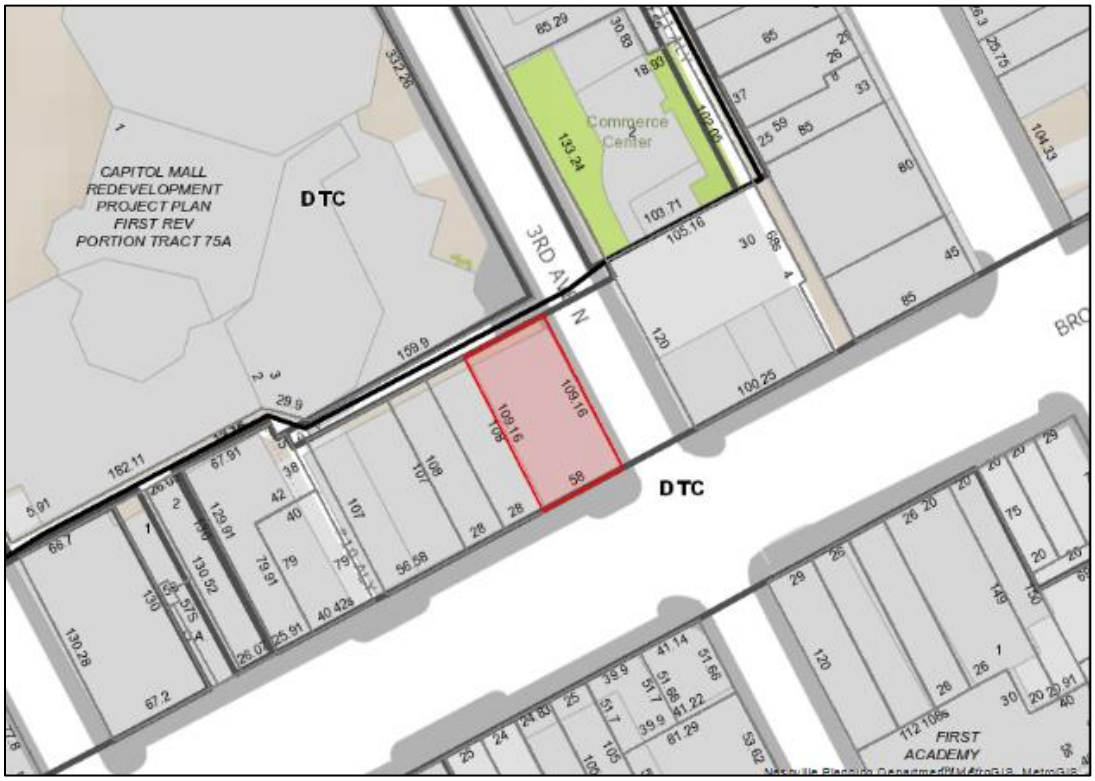

Aerial Map:

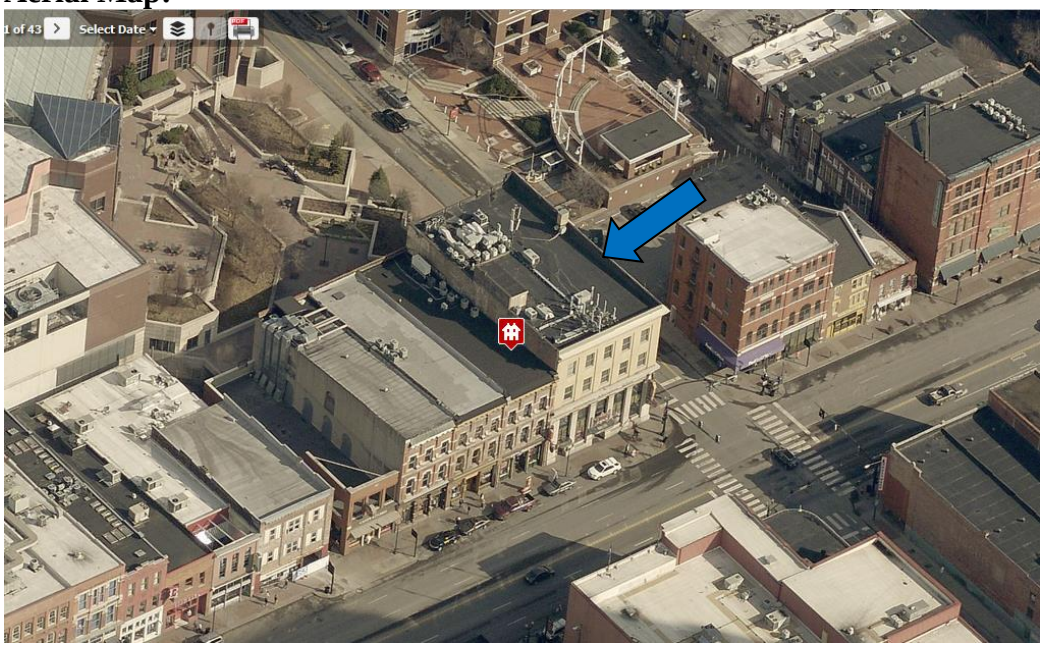

Applicable Design Guidelines:

II. General Principle: Lighting

General Principle: Lighting
Light fixtures should be as simple and unobtrusive as possible.

Guidelines:
T. Lighting

1. If lighting is installed, it should be concealed or simple and unobtrusive in design, materials, and relationship to other façade or elevation elements.
2. Light should be directed toward the façade instead of outward. Building facades may be illuminated through uplights mounted above the storefront cornice.
3. Dark metals are appropriate materials for light fixtures.
4. Concealed, indirect, or spot lighting is appropriate for exterior signage. Visible fluorescent or incandescent bulbs are not appropriate.

Background: 300 Broadway is a four-story stone and brick Neo-classical commercial building that dates to 1914 and is a contributing building in the Broadway Historic Preservation Zoning Overlay. A portion of the street-side façades were redesigned in 1946 by well-known architect Edwin Keeble. Windows were replaced in 2000 as part of a tax credit rehabilitation.

Figure 1. 300 Broadway

Previously the applicant requested colored building illumination but deferred the item. In April they submitted an application for exterior lighting fixtures with white lighting. Finding that the request met the design guidelines, staff issued permit 2017-025978, for white building illumination.

After installation staff observed the lighting to be red and that lighting had been added to the rooftop addition, which the applicant had noted as "removed" on their application. Staff contacted the applicant, who chose not to correct the violation or take the request to the Commission so the case was eventually turned over to Metro Legal. The applicant then submitted an application for the existing fixtures to have colored building illumination and to retain the colored rooftop lighting for the April 2019 MHZC public hearing. They requested deferrals in April, May and July of 2019.

Analysis and Findings: The application is to allow for colored building illumination for lighting fixtures already permitted on the façades of the building and to retain colored rooftop lighting and fixtures installed without a permit.

Location & Direction: The location and direction of lighting fixtures on the façade have been approved with the administrative permit; however, lighting was also installed on the rooftop addition without a permit.

The design guidelines allow for exterior lighting if it is concealed or unobtrusive. The lighting on the addition is inappropriate as the addition should be as minimally visible as possible. Illumination of the top of the addition will only draw attention to the new construction, which is not the intent of the design guidelines for rooftop additions, which states that additions should "not be visually jarring or contrasting" to the historic building.

In addition, light should be directed towards the façade rather than outwards. The lighting on the rooftop is directed away from the building and is therefore inappropriate. Staff recommends removal of the lighting on the addition.

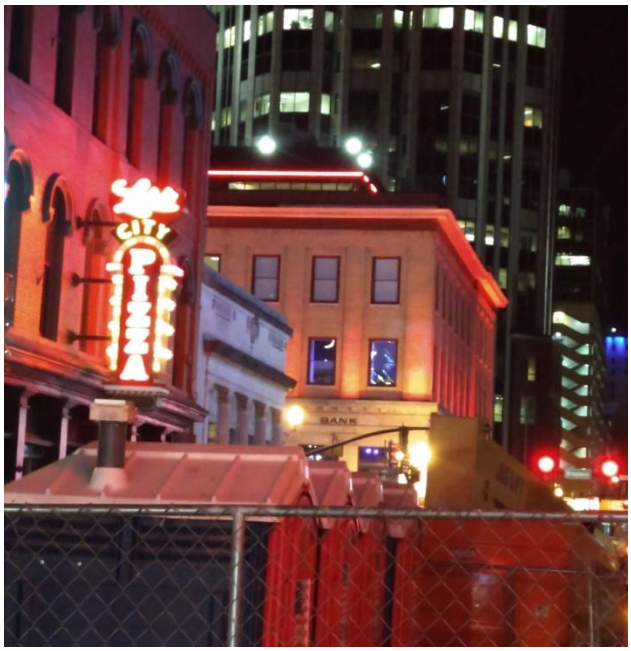

Figure 1: This image, taken from 3rd Avenue South and within the historic overlay, shows the red lighting that caps the rooftop addition.

Design: The drawings note that the lights change colors. Illumination should be white as colored lights change the color of the building and would detract from the historic character of the building. Essentially changing the color of the building with illumination does not meet Section T.1 of the design guidelines, which calls for lighting to be "unobtrusive."

In 2017, staff researched the issue of colored building illumination and held a charrette which included presentations from lighting expert Anthony Denami, preservation consultant Phil Thomason, sign manufacturer Bobby Joslin, state historic preservation office representative Dan Brown, and planning staff member Andrew Collins.

Figures 1 and 2: The upper portion of the side of the building is washed in red lighting and there are red wall sconces on the mezzanine level.

On August 16, 2017, the MHZC voted on a Building and Signage Illumination policy, which states that "colored bulbs or filters are not appropriate. Warm white light that does not distort the color of the building's materials or finishes is appropriate." This italicized information provides additional clarification for design guideline T.1: *If lighting is installed, it should be concealed or simple and unobtrusive in design, materials and relationship to other façade or elevation elements.*

No other buildings within the district have been approved for colored illumination.

Recommendation Summary:
Staff recommends disapproval of the request to retain colored building illumination and recommends that the rooftop lighting, installed without a permit, be removed, finding that the proposal does not meet Section II.T. of the design guidelines for lighting in the Broadway Historic Preservation Zoning overlay.

Scott J. Lynn
EVP & General Counsel
One Gaylord Drive
Nashville, TN 37214
(615) 316-6180 (direct dial)
slynn@rymanhp.com

April 8, 2019

Metro Nashville Historic Zoning Commission
Sunnyside in Sevier Park
3000 Granny White Pike
Nashville, Tennessee 37204

Re: 300 Broadway (Ole Red Nashville) – Application for Exterior Lighting

Ladies and Gentlemen:

We are writing in support of our application to display colored lighting (specifically, red lighting) on the exterior of the Ole Red Nashville building located at 300 Broadway in Nashville, Tennessee.

SUMMARY

In brief, we are asking the Metro Nashville Historic Zoning Commission (the "Commission") to approve the application to allow the 300 Broadway building to display red lighting on the exterior for the following reasons:

1. Prohibitions on Colored Lights Are Not Part of the MHZC Guidelines. Page 10 of the Broadway HP Zoning Overlay Document, dated December 20, 2017 (the "Overlay"), states:

> Italicized portions of the guidelines contain interpretive information that is meant to make the guidelines easier to understand; ***they are not part of the guidelines***. Illustrations and photographs are intended only to provide example buildings and circumstances. ***It is important to remember that every building is different*** and what may be appropriate for one building may not be appropriate for another. [Emphasis Added]

The actual guidelines contained in the Overlay (on Page 39) provide only that lighting should be "simple and unobtrusive in design, materials, and relationship to other façade or elevation elements." When the Commission adopted the interpretive information listed above at its August 16, 2017 meeting, it was specifically concerned that colored lighting would "change the look of, or obscure, architectural features" (thus violating the Secretary of the Interior Standards 5 and 9). As you can see from the image in Exhibit B, this is clearly not a concern in this case (as our proposed lighting is unobtrusive and does not change the look of, or obscure the architectural features of our building). As a result, approving this application would not violate the actual Commission guidelines.

2. No Department of Interior Restrictions on Colored Lights Exist; Many Historic Zoning Districts Also Do Not Explicitly Ban Colored Lights. The Secretary of the Interior's Standards for the Treatment of Historic Properties and the Guidelines for Preserving, Rehabilitating, Restoring and Reconstructing Historic Buildings (collectively, the "SOI Rules") do not specifically prohibit or specifically address colored lighting. Additionally, the historic zoning guidelines adopted by most major cities do not specifically prohibit colored lighting. As a result, the Commission has the ability to approve our application without being in conflict with the Overlay or Tennessee law (which requires consistency with the SOI Rules).

3. The Commission Has the Authority to Take Into Account a Building's Unique Characteristics. Exhibit A to this letter illustrates the current illumination on other buildings on Lower Broadway—in many cases the colored illumination on other building facades created by large lighted signs is comparable to, if not in excess of, the illumination created by the proposed colored lighting contemplated in our application. We believe the lighting contemplated by our application (shown in Exhibit B) is an appropriate balance between maintaining the historic character of our building while also being compatible with the surrounding area and its character as an historic entertainment district illuminated at night by various lighting sources, including signs.

In short, we would ask the Commission not to follow a "blanket" approach with respect to exterior lighting but to examine our application on an individual basis in light of (1) the overall effect of the colored lighting on our building, (2) the current condition of other buildings in close proximity to our building, and (3) the overall characteristics of the Lower Broad entertainment district as a whole.

INFORMATION ABOUT RYMAN HOSPITALITY PROPERTIES, INC. AND OLE RED NASHVILLE/300 BROADWAY

Ryman Hospitality Properties, Inc. is a publicly-traded company based in Nashville formerly known as Gaylord Entertainment Company. In addition to the 300 Broadway location, Ryman Hospitality owns the Gaylord Opryland Resort and the Grand Ole Opry House in the Donelson area, the Wildhorse Saloon on Second Avenue and the Ryman Auditorium in downtown Nashville.

We believe that Ryman and its predecessors have been an important part of downtown Nashville's revitalization efforts, particularly in connection with the renovation of the Ryman Auditorium in 1993-1994 and the opening of the Wildhorse Saloon in 1994. Ryman's current management team has overseen a continual reinvestment in its downtown properties, including the $14 million renovation of the Ryman Auditorium completed in 2015 and a significant renovation to the Wildhorse Saloon completed in 2017.

Ryman's most recent investment in downtown Nashville is Ole Red Nashville, a multi-level entertainment complex located at 300 Broadway. 300 Broadway is an historic building, originally constructed in the early 1900s and re-designed in the 1940s by noted local architect Edwin Keeble. For many years the building was the home of the Broadway National Bank and its successors, but since at least the 1980s the building has been home to various retail shops and office space. Since the 300 Broadway building was not designed to support the load and other requirements of an entertainment

venue, in order to retain the historic characteristics of the building Ryman essentially demolished the entire interior of the building, leaving the original façade in place. This project had a cost to Ryman of approximately $20 million.

In designing the overall signage package for the building, Ryman was mindful of the historic nature of the lower façade of the building and the overall "look and feel" of the entire building. As you can see from the images on Exhibit A and Exhibit B to this letter, the decision was made to avoid dramatically lighted and oversized signs, and instead to use other forms of exterior lighting, while being mindful of the impact of the lighting on the distinctive first story of the building's outside façade.

DISCUSSION OF THE APPLICATION

Prohibitions on Colored Lights Are Not Formally Adopted Commission Guidelines. Page 10 of the Overlay states:

> Italicized portions of the guidelines contain interpretive information that is meant to make the guidelines easier to understand; ***they are not part of the guidelines***. Illustrations and photographs are intended only to provide example buildings and circumstances. ***It is important to remember that every building is different*** and what may be appropriate for one building may not be appropriate for another. [Emphasis Added]

The actual guidelines contained in the Overlay (on Page 39) provide only that lighting should be "simple and unobtrusive in design, materials, and relationship to other façade or elevation elements."[1] The August 16, 2017 Commission Meeting Minutes contain a discussion regarding the Commission's adoption of the interpretative information listed in Footnote 1 below. The Minutes specifically provided that, when the Commission adopted the interpretive information in Footnote 1 below, it was specifically concerned that colored lighting would "change the look of, or obscure, architectural features and thus no longer be "unobtrusive" (thus violating the Secretary of the Interior Standards 5 and 9). As you can see from the image in Exhibit B, this is clearly not a concern in this case, and as a result approving this application would not violate the actual Commission guidelines, due to the unobtrusive nature of our proposed lighting.

Approval of Our Lighting Application Would Not Conflict with the Secretary of Interior Standards. We believe it is important to note that the SOI Rules do not specifically prohibit (or really even address) colored exterior lighting. The 1997 version of The Secretary of Interior's Standards for Rehabilitation and Illustrated Guidelines for Rehabilitating Historic Buildings do not specifically mention exterior lighting as a topic. The 2017 version of The Secretary of Interior's Standards for the Treatment of Historic Properties With Guidelines for Preserving, Rehabilitating, Restoring and Reconstructing

---

[1] While the Commission's interpretive guidance on Page 39 of the Overlay does state that "[c]olored bulbs or filters are not appropriate" and that "[w]arm white light that does not distort the color of the buildings materials or finishes is appropriate", we would like to again remind the Commission that this is interpretive guidance only and should be read in light of the entire proviso on page 10 of the Overlay (quoted above in its entirety) and the other reasons contained in this letter.

Historic Buildings provide (in the guidelines) only that "Designing new onsite features (such as parking areas, access ramps, or lighting) when required by a new use, so that they are unobtrusive as possible, retain the historic relationship between the buildings and the landscape, and are compatible with the historic character of the property" is a recommended practice (Page 142).

Additionally, while it is true that, as noted in the August 16, 2017 Commission minutes, there likely are very few other historic zoning commissions across the country that "specifically approve" colored lighting, it is important to note that many, if not most, of these other historic zoning commissions do not expressly prohibit, or even specifically address, colored lighting. As only one example, the City of Pittsburgh Historic Preservation Guidelines (which contain a section on exterior lighting) do not address colored lighting at all, instead stating that any exterior lighting should be "compatible with the surrounding historic context and minimize light spill onto adjoining properties and the night sky".

The Commission Should Consider Our Application in Light of the Individual Characteristics of Our Building. Exhibit A to this letter illustrates the current illumination on other buildings on Lower Broadway—in many cases the colored illumination on other building facades created by the existing lighted signs is comparable to, if not in excess of, the illumination created by the proposed colored lighting contemplated in our application. We believe the lighting contemplated by our application (shown in Exhibit B) is an appropriate balance between maintaining the historic character of our building while also being compatible with the surrounding area and its character as an historic entertainment district.

In short, we would ask the Commission not to follow a "blanket" approach with respect to exterior lighting but to examine our application on an individual basis in light of (1) the overall effect of the colored lighting on our building, (2) the current lighting of the other buildings in close proximity to our building, and (3) the overall characteristics of the Lower Broad entertainment district as a whole.

Thank you in advance for you consideration of this matter, and we look forward to speaking with you at the April 17, 2019 Commission meeting.

Sincerely,

Scott J. Lynn

cc: Colin Reed, Chairman and CEO, Ryman Hospitality Properties, Inc.

Exhibit A – Lower Broad at Night

Exhibit B – Ole Red Colored Lighting

PRESERVATION PERMIT APPLICATION

METROPOLITAN HISTORIC ZONING COMMISSION

3000 Granny White Pike, Nashville, TN 37204
615-862-7970, 615-862-7974 fax, HistoricalCommission@nashville.gov

DEADLINE: Complete applications must be received a minimum of 16 days prior to the next MHZC hearing which takes place on the third Wednesday of the month. Please visit www.nashville.gov for the schedule. Incomplete applications will not be scheduled until all information has been received.

PROPERTY ADDRESS: 300 Broadway, Nashville, TN 37201

APPLICANT (All communication by phone, fax, email or mail will be with the applicant.)

Name Erica Garrison with a copy to Scott Lynn @ slynn@rymanhp.com

Mailing Address Waller Lansden, 511 Union St., Suite 2700

City Nashville Zip Code TN

Contact Phone 615-850-8779 Fax Number 615-244-6804 Email erica.garrison@wallerlaw.com

☐Owner ☐ Contractor ☐Architect/Designer ■Other legal counsel

PROPERTY OWNER (If different from applicant.)

Name 300 Broadway LLC

Mailing Address 1 Gaylord Dr

City Nashville Zip code 37214

Contact Phone 615-316-6180 Fax Number Email slynn@rymanhp.com

TYPE OF WORK ■New Construction (Addition) ☐Demolition ☐Renovation ■Other Change light color of exterior lights to white

(Only exterior projects are reviewed.)

DESCRIPTION OF WORK (Please use a separate sheet of paper for longer descriptions.)

Proposed use of white or red lights on the exterior as more fully described herein. No additional work or construction required as lights can be changed to red through automation.

Any substitution or deviation from the approved work items listed on the Preservation Permit requires further review and approval by the Historic Zoning Commission prior to being undertaken. Accurate scale elevations, drawings, and site plans are needed for project review. The MHZC retains copies of all materials submitted.

Does the project require an alteration to base zoning?

☐**Yes** **If yes, please see "Setback Determinations" at the bottom of page 2 for notification information. If notice is not met, project review will be delayed until the following public hearing.**

■ **NO** **If no, notification by the applicant is not required.**

Estimated Cost of Work None

Code Administration's Temporary Bldg Permit # Will provide if necessary
(This number starts with a "T" followed by the year. It may also be obtained later.)

Covenant Instrument # N/A
(Required for Detached Accessory Dwelling Units)

SIGNATURE **DATE** 3/4/2019

I/We the above signed do hereby make application for a Preservation Permit following plans and proposals to be undertaken within the boundaries of an historic preservation overlay pursuant to Article IX of the Metropolitan Code.

SUBMIT FORM VIA EMAIL *Please include complete set of drawings in your email submission

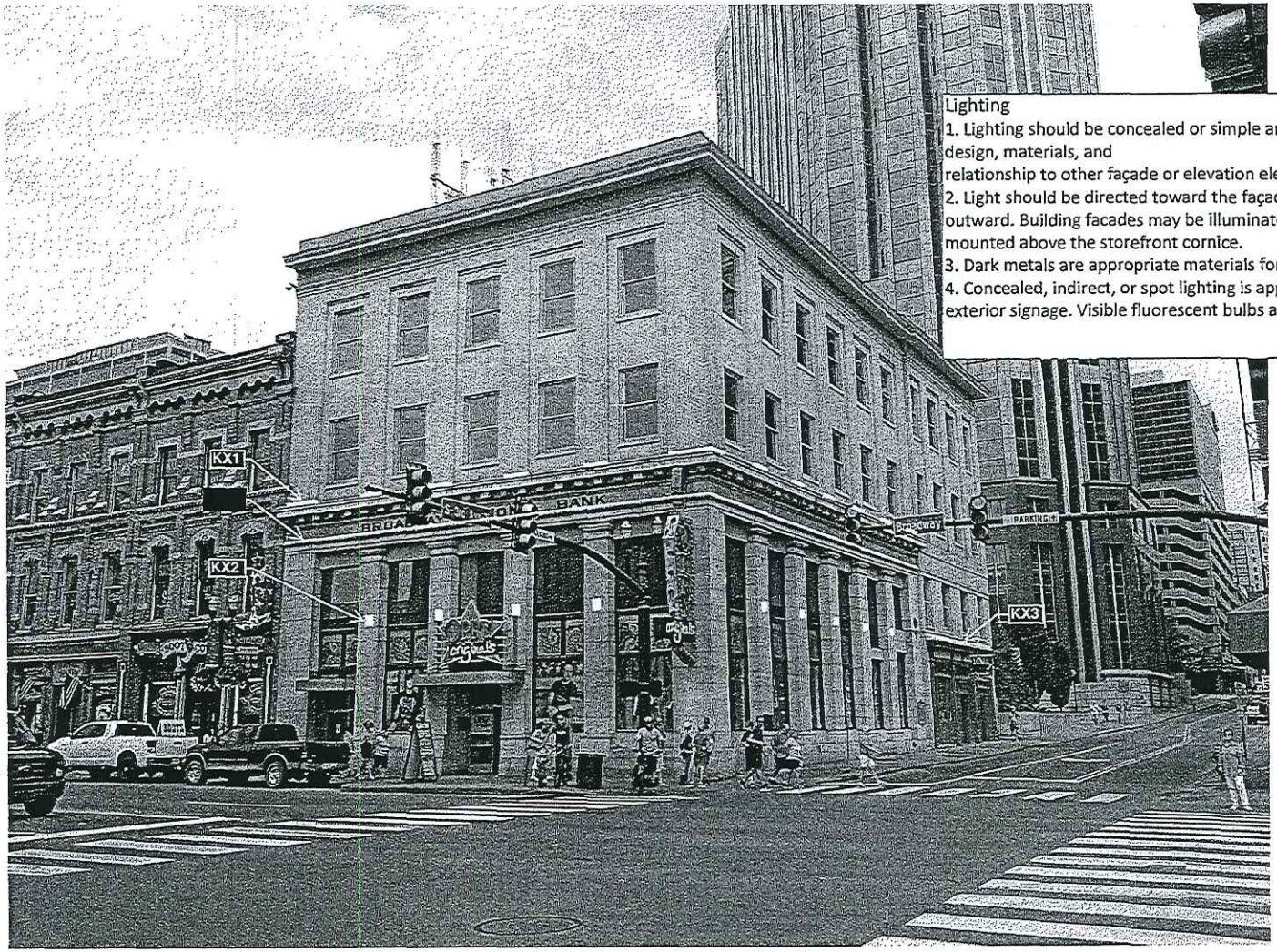

Lighting

1. Lighting should be concealed or simple and unobtrusive in design, materials, and relationship to other façade or elevation elements.
2. Light should be directed toward the façade instead of outward. Building facades may be illuminated through uplights mounted above the storefront cornice.
3. Dark metals are appropriate materials for light fixtures.
4. Concealed, indirect, or spot lighting is appropriate for exterior signage. Visible fluorescent bulbs are not appropriate.

OLE RED

TUCK-HINTON
ARCHITECTS

EXTERIOR FACADE LIGHTING

15004
03 APRIL 2017

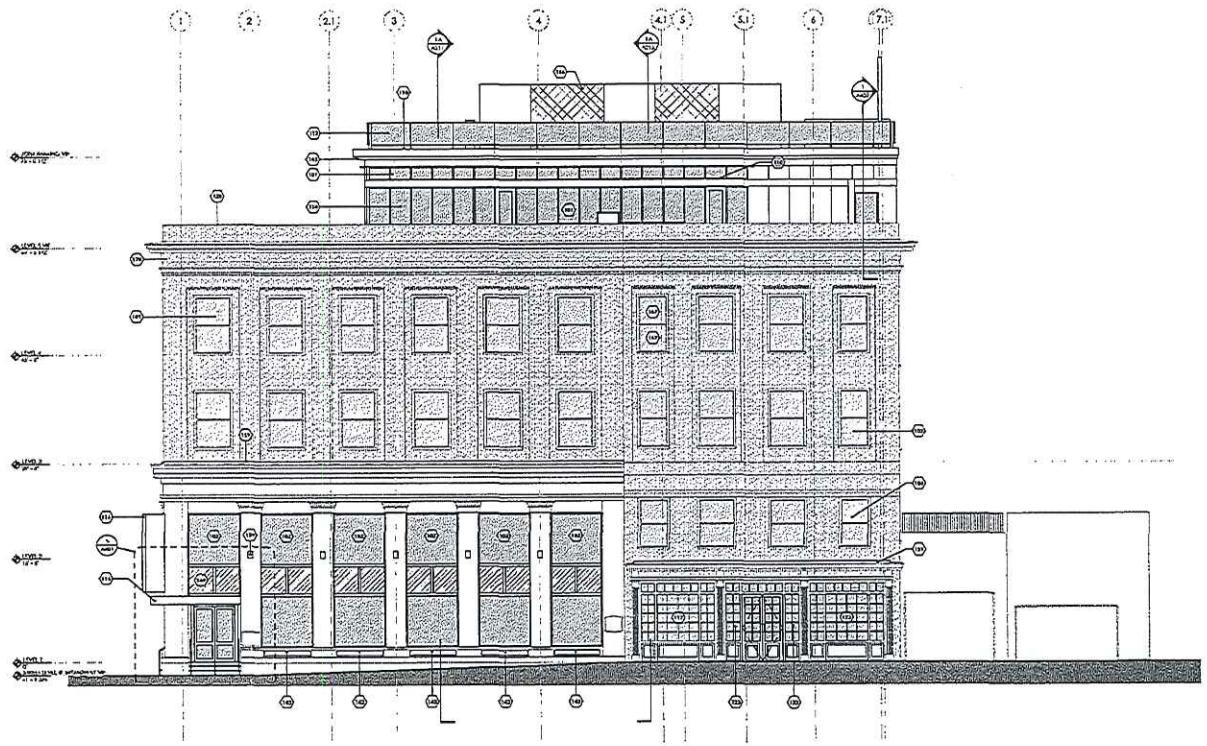

EAST ELEVATION 1

8' 4' 0 8'

GRAPHIC SYMBOLS

- KEYNOTE SYMBOL, REFER TO NOTES ON SPECIFIC SHEET
- BRICK
- METAL PANEL SYSTEM
- PREVAILING WINDOW GLASS
- REPATTERNED REFLECTIVE GLASS
- STEEL SHEET PILE

NOTES

ALL EXISTING BRITTLE BRICK AND STONE (MASONRY) SHALL BE CLEANED AND LOOSE PAINT REMOVED. SLICK POINT LOOSENING BRICK MORTAR. MORTAR & MISSING AND PROVIDE NEW MORTAR. LEDGE FOR 1/4 TO 1/2 M.

EXISTING BRICK THAT HAS BECOME TO POLLUTED SHALL BE REMOVED AND REPLACE

KEYNOTES

- 101 ALUM INSULATED STOREFRONT WINDOW SYSTEM
- 102 ALUM INSULATED STOREFRONT WINDOW SYSTEM, TO MATCH EXISTING CURTAIN COMPONENTS
- 103 ALL EXISTING WINDOWS TO REMAIN (UNO), WINDOWS TO BE PAINTED (COLOR TBD), WINDOWS TO BE FIXED GLASSES, REPAIRS AS REQUIRED
- 112 SINGLE PLY MEMBRANE ROOF ON TAPERED ROOF INSULATION
- 113 ALUMINUM WALL PANELS ON PARTIAL SHEET PANELING, COLORS TO BE DETERMINED
- 114 SUNWORK GLASS WINDOW WALL AS EXTL 3 REPAIRS
- 115 ALUMINUM COMPOSITE METAL PANEL CANOPY
- 116 MARQUEE - SEE DOOR HARDWARE
- 117 FULL STRIP OF EXISTING FINIS, CAULK, PATCH, PREP AND PAINT. REPAIR OR REPLACE ANY DAMAGED EXISTING WOOD MOULDINGS
- 123 NEW WALL WOOD STOREFRONT TO MATCH EXISTING
- 126 REMOVEABLE AWNING, H.I.C.
- 139 INTEGRAL ALUMINUM COMPOSITE METAL COPING
- 140 SMALL PLANTER AT EXISTING STONE SILL TYPICAL - SEE WOOD HEAD FRAMES (TO-116)
- 146 ALUMINUM COMPOSITE METAL PANEL SYSTEM
- 148 REPLACE WITH NEW ON GLASS AT EXTL 2 WINDOW ONLY
- 159 EXTERIOR LIGHTING - COORD. W/ ELECTRICAL
- 166 SOLID SHEET PANEL BEHIND WINDOW WITH PAINT WALL AND WINDOW LINES
- 167 PRIVACY FILM ON WINDOW
- 170 PAINT EXISTING CONCRETE SILL, COLOR TO BE SELECTED BY ARCHITECT

ELEVATION REFERENCE

TUCK-HINTON ARCHITECTS

OLE RED

300 BROADWAY, NASHVILLE, TN

CONSTRUCTION DOCUMENTS
28 FEBRUARY 2017

15004

CHRISTINE HOBBS ... STATE OF TENNESSEE

EAST ELEVATION

A201

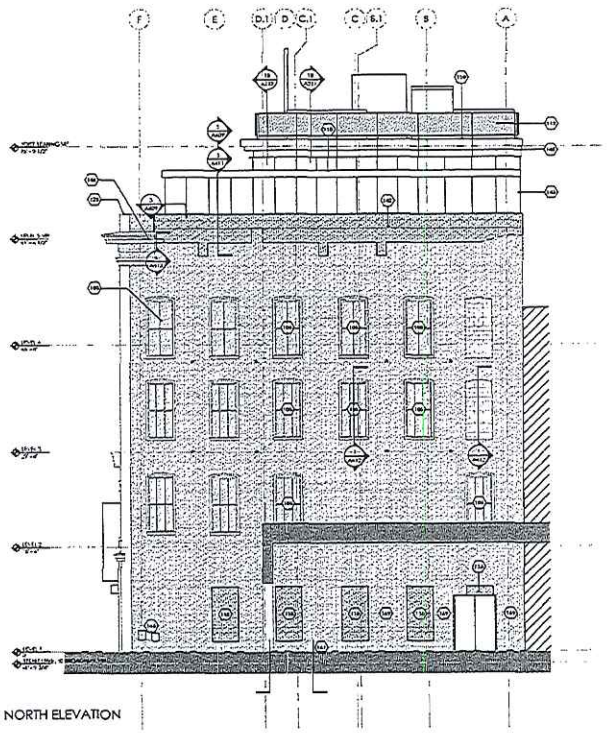

1A NORTH ELEVATION

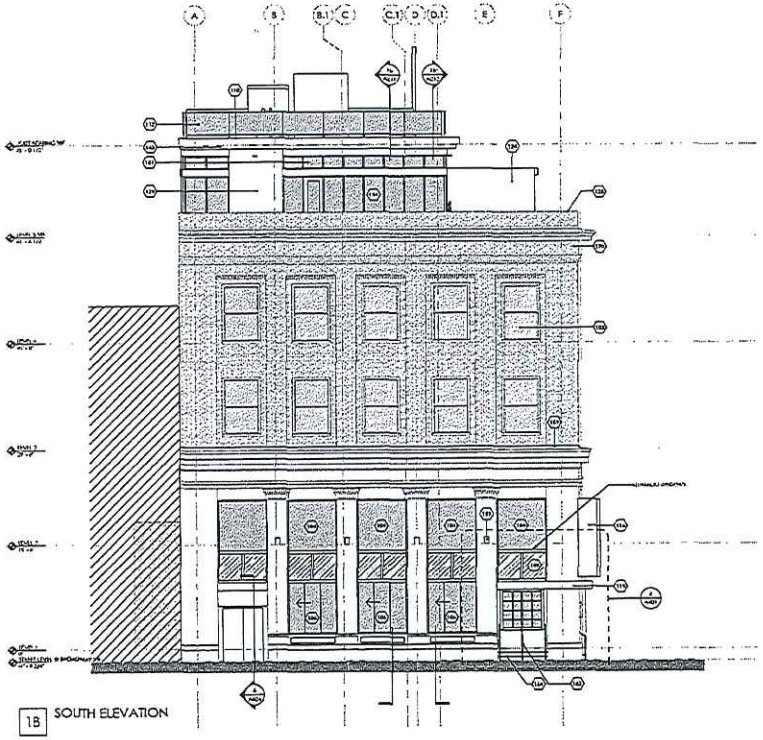

1B SOUTH ELEVATION

ELEVATIONS 1

8' 4' 0 8'

GRAPHIC SYMBOLS

KEYNOTE SYMBOL
REFER TO NOTE ON SPECIFIC SHEET

BRICK

METAL PANEL SYSTEM

INSULATING VISION GLASS

REFLECTIVE FILM ON GLASS

STEEL SHEET WALL

NOTES

ALL EXISTING LIMESTONE BRICK AND STONE MASONRY SHALL BE CLEANED AND LOOSE PARTS REMOVED. REPLACE DAMAGED BRICK WITH MORTAR & MESHING AND PREPARE HORIZONTAL LEDGE FOR FLASH TO SIT

EXISTING BRICK THAT IS LOSSY TO WALL OR JAMBS SHALL BE REMOVED AND REPAIR

KEYNOTES

101 ALUM INSULATED STOREFRONT WINDOW SYSTEM
102 ALL EXTERIOR WINDOWS TO REMAIN (U.O.) WINDOWS TO BE PAINTED (COLOR TBD), WINDOWS TO BE HELD CLOSED, REPAIRS AS REQUIRED
104 INSULATED SINGLE HUNG WINDOW SYSTEM W/ SHUTTERS LVL 2 TYP, TO MATCH EXISTING LAYOUT/CONFIGURATION
105 WINDOW TO BE REMOVED (WINDOW, FRAME, PAINTED CASING) TO BE A DOOR WITH AT BALCONIES
106 SEAMLESS OPTIMIZE GLASS WINDOW WALL AT BALCONY LVL 1
112 SINGLE-PLY REVERSIBLE ROOF ON TAPERED RIGID INSULATION
113 ACRYLIC SCREEN WALL FRAMED ON PAINTED STEEL FRAMING COLORS: MATCHING
114 DECORATIVE GLASS WINDOW WALL AT LVL 3 TERRACE
115 ALUMINUM COMPOSITE METAL PANEL CANOPY
116 MARQUEE - SEE BUILDING ELEVATIONS
118 BRICK WALL & WINDOW OPENING TO MATCH EXISTING, SET BACK FROM EXISTING EXTERIOR FACE
124 WOOD PANEL FEATURE WALL
126 RETRACTABLE AWNING, M.L.C.
127 METAL ALUMINUM COUNTERS METAL COVING
128 BRICK INFILL & PARAPET TO MATCH EXISTING, LEVEL 4 & TO BALCONY FACADE
146 ALUMINUM COMPOSITE METAL PANEL SYSTEM
146 UNION JOINT SCRIPT
149 REPLACEMENT FILM ON GLASS @ LVL 2 FLOOR LINE, TYP
154 EXTERIOR LIGHTING - COORD. W/ ELECTRICAL
162 STEEL HANDRAIL
164 SKYLIGHT SEATS
168 MID-STATE BASE CONNECTION AND GAS METER
169 PATCH EXISTING BRICK WHERE NECESSARY
170 PAINT MATCHING SAME BRICK, COLOR TO BE ENTERED BY ARCHITECT

ELEVATION REFERENCE

TUCK-HINTON
ARCHITECTS

OLE RED
300 BROADWAY, NASHVILLE, TN

CONSTRUCTION DOCUMENTS
28 FEBRUARY 2017

15004

NORTH & SOUTH ELEVATIONS

A202

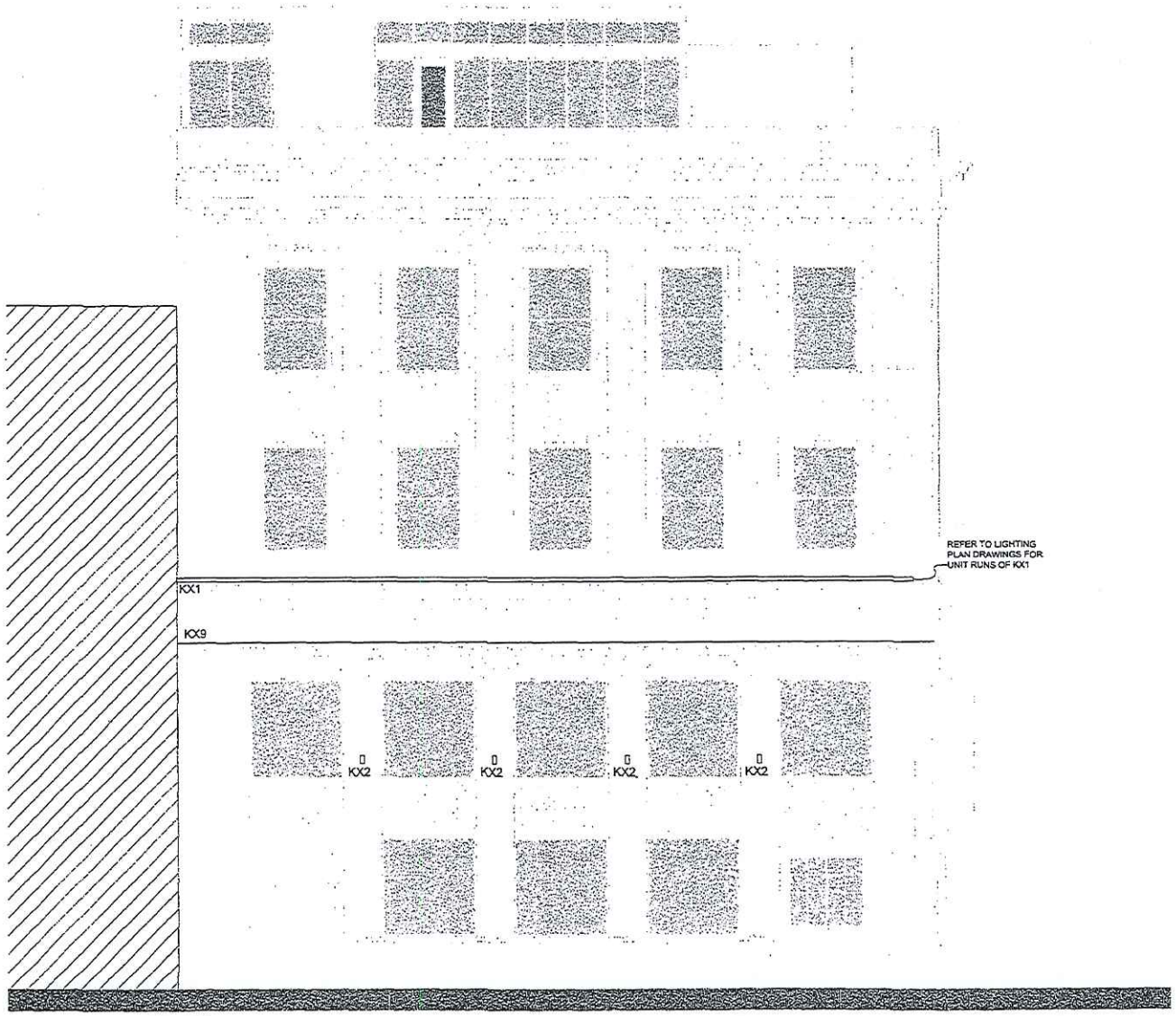

CONTOLS NOTES:

- REFER TO LIGHTING PLAN DRAWINGS FOR ZONING AND CONTROLS INFORMATION

SOUTH ELEVATION LIGHTING
SCALE: 1/4" = 1'-0"
CMK DRAWING FOR REFERENCE ONLY

1

TUCK-HINTON
ARCHITECTS

OLE RED
300 BROADWAY, NASHVILLE, TN

CM KLING + ASSOCIATES INC
ARCHITECTURAL LIGHTING DESIGN

Construction Documents
26 FEBRUARY 2017

15004

NOT FOR CONSTRUCTION

SOUTH ELEVATION LIGHTING

LT-08

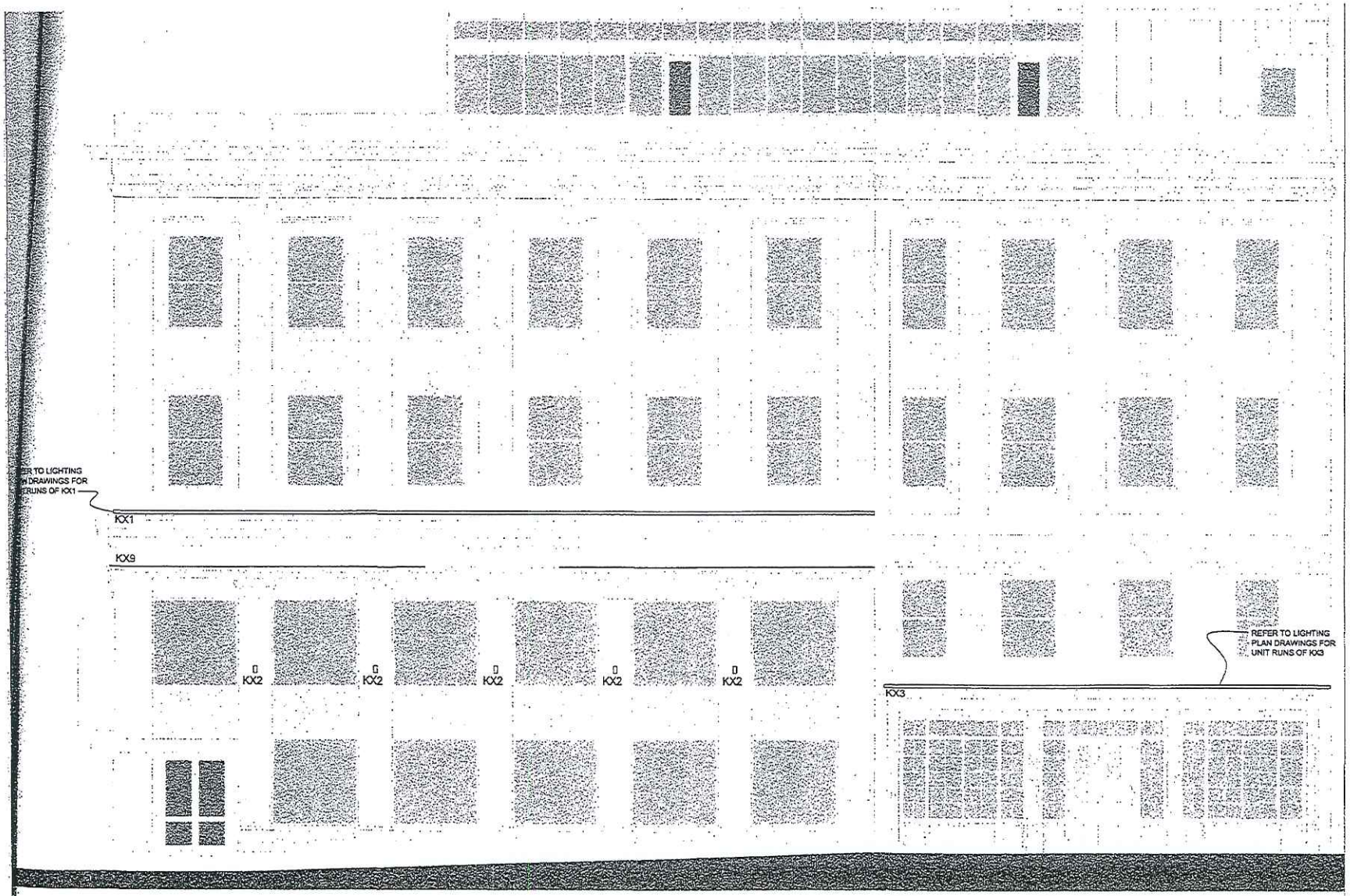

CONTOLS NOTES:

- REFER TO LIGHTING PLAN DRAWINGS FOR ZONING AND CONTROLS INFORMATION

EAST ELEVATION LIGHTING
SCALE: 1/4" = 1'-0"
CMK DRAWING FOR REFERENCE ONLY

1

TUCK·HINTON ARCHITECTS

OLE RED
300 BROADWAY, NASHVILLE, TN

CM KLING – ASSOCIATES INC
ARCHITECTURAL LIGHTING DESIGN
1411 KING STREET ALEXANDRIA, VA 22314
TELEPHONE 703-684-2070 WWW.CMKLAD.COM

Construction Documents
28 FEBRUARY 2017

15004

NOT FOR CONSTRUCTION

EAST ELEVATION LIGHTING

LT-07

EXTERIOR

KX1	SURFACE MOUNTED LINEAR GRAZER	FIXTURE	LUMENPULSE	LOG-VOLT-LENGTHS PER PLAN-RGBW-10X60-SAM-BK-DMX/RDM	17.25W / LF	BY EE	BLACK	2-5/16"	X		3-1/2"	
		LAMP	LUMENPULSE	RGBW COLOR CHANGING LED								
		POWER SUPPLY	LUMENPULSE	DMX								
KX2	SURFACE MOUNTED DIRECT / INDIRECT SCONCE	FIXTURE	ERCO	85110.023	12W	BY EE	GRAPHITE	3-3/4"	X		7-11/16"	
		LAMP	ERCO	3000K, 90+ CRI LED								
		POWER SUPPLY	ERCO	REVERSE PHASE DIM								
KX3	SURFACE MOUNTED LINEAR GRAZER	FIXTURE	LUMENPULSE	LOG-VOLT-LENGTHS PER PLAN-RGBW-10X10-SAM-BK-DMX/RDM	17.25W / LF	BY EE	BLACK	2-5/16"	X		3-1/2"	
		LAMP	LUMENPULSE	RGBW COLOR CHANGING LED								
		POWER SUPPLY	LUMENPULSE	DMX								
KX4	SURFACE MOUNTED EXTERIOR TAPE LIGHT	FIXTURE	LED LINEAR	HYDRALUX-HD10-W8-22-IP67 + VARIOPSU 24V/60 DRIVER	3.3W / LF	BY EE	N/A	1/2"	X		.15"	
		LAMP	LED LINEAR	2900K LED								
		POWER SUPPLY	LED LINEAR	1-10V DIM								
KX5	SURFACE MOUNTED LINEAR GRAZER BACKLIGHT	FIXTURE	LUMENPULSE	LOG-VOLT-LENGTHS PER PLAN-RGBW-10X60-SAM-BK-DMX/RDM	17.25W / LF	BY EE	BLACK	2-5/16"	X		3-1/2"	
		LAMP	LUMENPULSE	RGBW COLOR CHANGING LED								
		POWER SUPPLY	LUMENPULSE	DMX								
KX6	TRIMLESS RECESSED INGROUND UPLIGHT	FIXTURE	INTERLUX - FILIX	FX RDD60-L-30-FL-24-B-C + D-520-24006	6W	BY EE	BLACK	2-1/2"		X	4"	
		LAMP	INTERLUX - FILIX	3000K LED								
		POWER SUPPLY	INTERLUX - FILIX	0-10V DIM 10%								
KX7	SURFACE MOUNTED EXTERIOR TASK TAPE LIGHT	FIXTURE	LED LINEAR	HYDRALUX-HD10-W8-22-IP67 + VARIOPSU 24V/60 DRIVER	3.3W / LF	BY EE	N/A	1/2"	X		.15"	
		LAMP	LED LINEAR	2900K LED								
		POWER SUPPLY	LED LINEAR	1-10V DIM								
KX8	RECESSED ILLUMINATED TILE	FIXTURE	COOLEDGE	TILE-STD-300-30 + DIM DRIVER	2.5W / SQ FT	BY EE	N/A			X	1/8"	
		LAMP	COOLEDGE	3000K LED								
		POWER SUPPLY	COOLEDGE	0-10V DIM								
KX9	LINEAR SURFACE MOUNTED COLOR CHANGING TAPE LIGHT	FIXTURE	LUMINII	LLX18WET-RGB-SL-NC-LENGTHS PER PLAN + PSDMX-3X100-24 + SLIM LINE 7 PROFILE	4W / LF	BY EE	WHITE	3/4"	X		1/4"	
		LAMP	LUMINII	RGB COLOR CHANGING LED								
		POWER SUPPLY	LUMINII	DMX								
KX10	SURFACE MOUNTED ADJUSTABLE SPOTLIGHT	FIXTURE	INTERLUX - LINEA	EYELET65-Q 91219-W-30	2W	BY EE	BLACK	1-1/4"	X		1"	
		LAMP	INTERLUX - LINEA	3000K LED								
		POWER SUPPLY	INTERLUX - LINEA	NON-DIM								

Specification Sheet

lumenfacade™
COLOR CHANGING

Client _____ **Project name** _____

Order# _____ **Type** _____ **Qty** _____

FEATURES AND BENEFITS

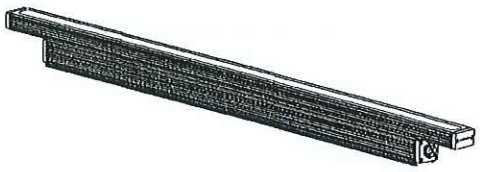

c UL us CE RoHS CIDET CERTIFICADO No 05684, 05685 RETILAP **IK07***

Physical :

- Low copper content extruded aluminum housing
- Available in 1', 2', 3' or 4' sections
- Electro-statically applied polyester powder coat finish
- Machined aluminum end caps and silicone gaskets
- Stainless steel hardware
- Clear tempered glass
- Asymmetric wallwash, 10° x 10°, 10° x 60°, 30° x 60° or 60° x 60° optics
- IP66
- IK07 rated (asymmetric wallwash lens is IK06 rated)
- Meets 3G ANSI C136.31 Vibration standard for bridge applications
- *Corrosion-resistant coating for hostile environments***

Performance :

- Minimum 1fc (10.7 lux) @ 85 feet (26m) distance (RGBW full white, 4' unit, 10° x 60° optic)
- Color mixing options: RGB (3 channels) or RGBW (4 channels)
- Lumen maintenance L70 @ 25°C - 120,000 hrs
- Lumen measurements comply with LM - 79 - 08 standard
- Resolution per foot or per fixture (configured with LumenID V3 software & DMX/RDM)
- Operating temperatures: -25° C to 50° C [-13F to 122F]

4ft (full white)	Delivered Output [lm]	Intensity [peak cd]
RGB, 10°x60°	1,898	8,350
RGBW, 10°x60°	2,215	7,300
RGB, WW	1,565	2,464
RGBW, WW	1,956	2,993

Electrical :

- Line voltage luminaire for 100 to 277V
- Power and data in 1 cable (#16-5)
- Up to 112 feet with 1 power & data feed (277V)
- 17.25W/ft
- DMX/RDM enabled

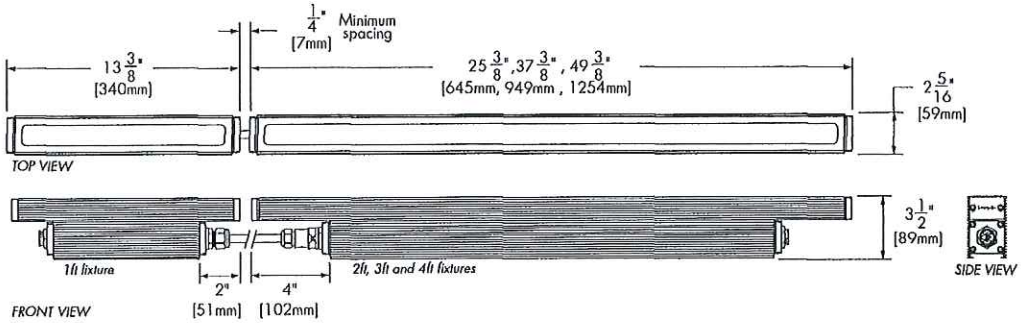

*Asymmetric wallwash lens is IK06 rated.
** Use only when exposed to salt spray and harsh chemicals. This option is not required for normal outdoor exposure!

08/JN/2016
N.Kassabian - Rev.37

© Copyright lumenpulse 2016

1751 Richardson, Suite 1505
Montreal (Quebec) Canada
H3K 1G6

1.877.937.3003
P.514.937.3003
F. 514.937.6289
info@lumenpulse.com
www.lumenpulse.com

5-year limited warranty.

Consult www.lumenpulse.com for our complete Standard Terms and Conditions of Sales.

lumenpulse

lumenpulse reserves the right to make changes to this product at any time without prior notice and such modification shall be effective immediately.

Specification Sheet

lumenfacade™
COLOR CHANGING

ASYMMETRIC WALLWASH OPTIC FEEDING SIDE DETAIL

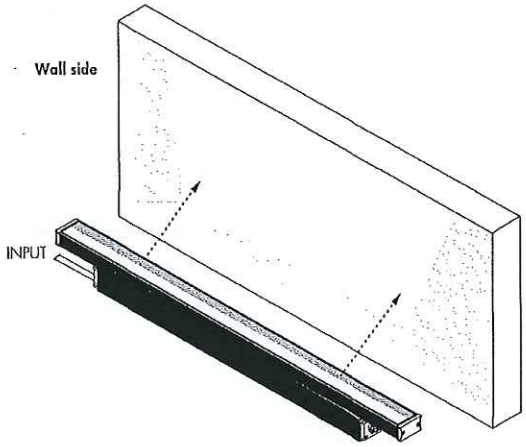

WWLF
Asymmetric Wallwash Optic, Left Feed

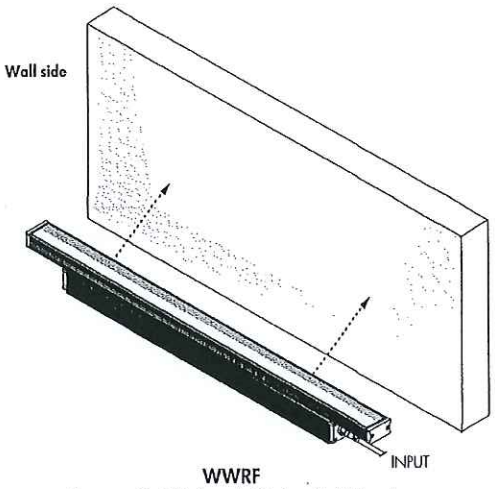

WWRF
Asymmetric Wallwash Optic, Right Feed

Always position frosted side toward the wall

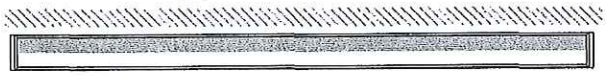

TOP VIEW

FRONT VIEW

RIGHT SIDE VIEW
(Fixture pointing upwards)

*Fixture's feeding side is based on uplight installations. Feeding sides are reversed when fixture is used in a downlight application.

Recommended setback from wall is 1/10 of the wall height.

Example: 2ft setback for a 20ft wall.

© Copyright lumenpulse 2016

1751 Richardson, Suite 1505
Montreal (Quebec) Canada
H3K 1G6

1.877.937.3003
P.514.937.3003
F. 514.937.6289
info@lumenpulse.com
www.lumenpulse.com

5-year limited warranty.

Consult www.lumenpulse.com for our complete Standard Terms and Conditions of Sales.

lumenpulse

lumenpulse reserves the right to make changes to this product at any time without prior notice and such modification shall be effective immediately.

Specification Sheet

lumenfacade™
COLOR CHANGING

MOUNTING OPTIONS

Surface Mount

SAM
Slim Adjustable Mounting

UMP
Fixed Mounting

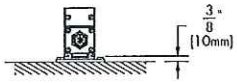

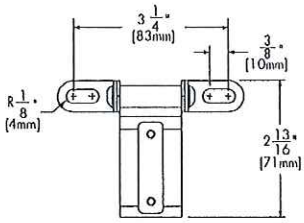

SAM
Mounting Hole Pattern

Wall Mount

UMAS
Universal Adjustable Mounting

WAM2
Adjustable Wall Mounting 2"

WAM6
Adjustable Extended Arm Mounting 6"

WAM12
Adjustable Extended Arm Mounting 12"

WAM18
Adjustable Extended Arm Mounting 18"

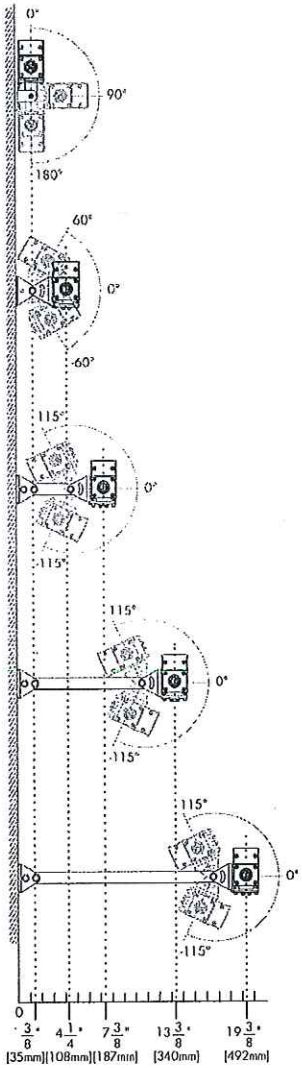

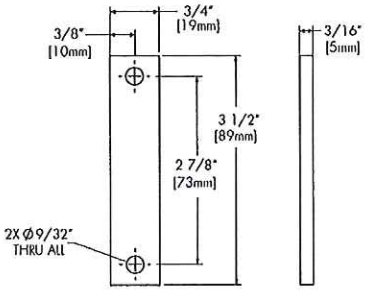

UMP
Mounting Hole Pattern

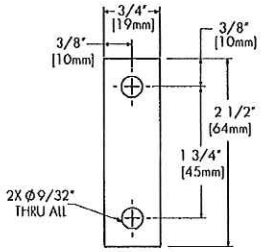

UMAS
Mounting Hole Pattern

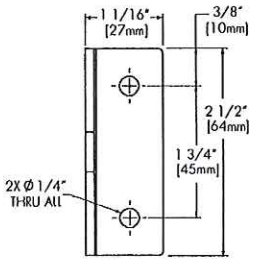

WAM
Mounting Hole Pattern

© Copyright lumenpulse 2016

1751 Richardson, Suite 1505
Montreal (Quebec) Canada
H3K 1G6

1.877.937.3003
P.514.937.3003
F. 514.937.6289
info@lumenpulse.com
www.lumenpulse.com

5-year limited warranty.

Consult www.lumenpulse.com for our complete Standard Terms and Conditions of Sales.

lumenpulse

Lumenpulse reserves the right to make changes to this product at any time without prior notice and such modification shall be effective immediately.

Specification Sheet

lumenfacade™
COLOR CHANGING

OPTION

ETE - End-to-end configuration,
no jumper cable needed.
16" cable included at input.

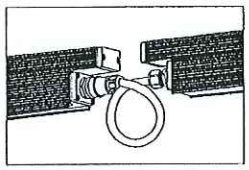

ACCESSORIES
Order separately

Control Systems:

LTO2 Lumentouch is a wall mount DMX 512 controller keypad.

LCU Lumencue is a USB / mini SD DMX 512 controller.

LID LumenID is a diagnostic and addressing DMX 512 controller.
It must be specified on all DMX applications.
Refer to LID specification sheet for details.

LTN Lumentone is a simple pre-programmed DMX 512 controller
with a push button rotary dial and live feedback.

Control Boxes:

CBX DMX/RDM control box.
Up to six power and data outputs to fixtures or fixture runs.
Ethernet enabled option.
Refer to CBX specification sheet for details.

Leader Cable :

LOGLCD___ Leader Cable for Lumenfacade.
Please add desired cable length : 10', 25' or 50' [3m, 7.6m or 15.2m] standard lengths
Sealing endcap is mandatory for any unused connector.
(1) included with every leader cable

LOGLCD___-ETE Leader Cable for Lumenfacade, ETE option.
Please add desired cable length : 10', 25' or 50' [3m, 7.6m or 15.2m] standard lengths
Sealing endcap is mandatory for any unused connector.
(1) included with every leader cable

Jumper Cable :

LOGJCD___ Jumper Cable for Lumenfacade.
Please add desired cable length : 2' or 4' [0.6m, 1.2m] standard lengths

LOGJCD___-ETE Jumper Cable for Lumenfacade, ETE option.
Please add desired cable length : 2' or 4' [0.6m, 1.2m] standard lengths

© Copyright Lumenpulse 2016

1751 Richardson, Suite 1505
Montreal (Quebec) Canada
H3K 1G6

1.877.937.3003
P.514.937.3003
F. 514.937.6289
info@lumenpulse.com
www.lumenpulse.com

5-year limited warranty.

Consult www.lumenpulse.com
for our complete Standard Terms
and Conditions of Sales.

lumenpulse

Lumenpulse reserves the right to make changes to this product at any time without prior notice and such modification shall be effective immediately.

Specification Sheet

lumenfacade™
COLOR CHANGING

RESOLUTION DETAILS

Fixture resolution can be configured on-site within the LumenID V3 software. A DMX/RDM enabled CBX is required.

Resolution per foot: each foot is addressed independently

DMX ADDRESSES:

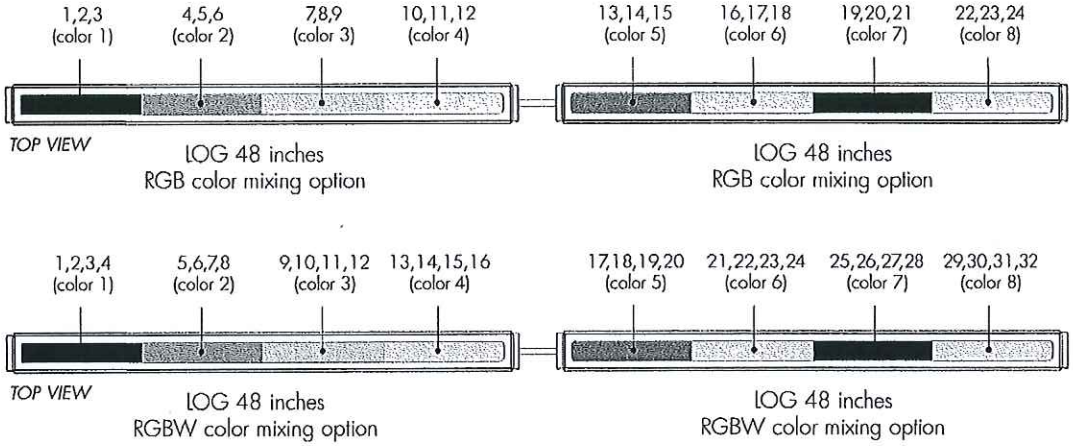

Resolution per fixture: each fixture is addressed independently

DMX ADDRESSES:

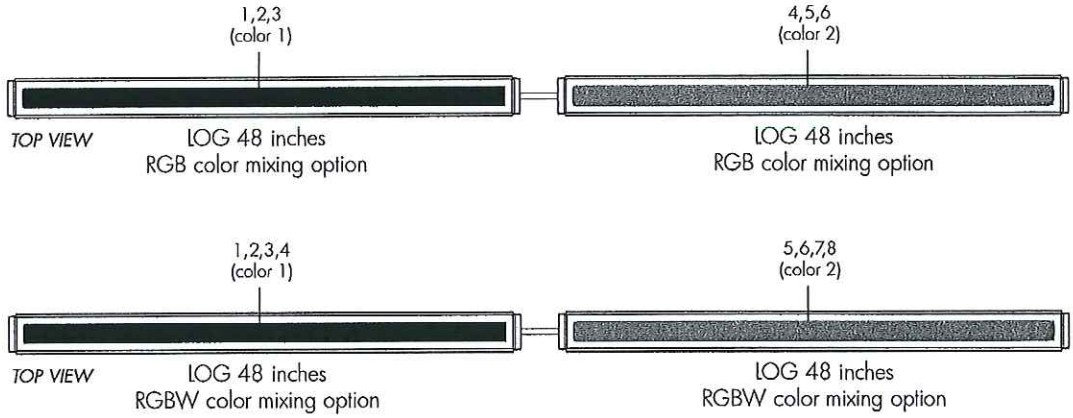

© Copyright Lumenpulse 2016

1751 Richardson, Suite 1505
Montreal (Quebec) Canada
H3K 1G6

1.877.937.3003
P.514.937.3003
F. 514.937.6289
info@lumenpulse.com
www.lumenpulse.com

5-year limited warranty.

Consult www.lumenpulse.com for our complete Standard Terms and Conditions of Sales.

lumenpulse

lumenpulse reserves the right to make changes to this product at any time without prior notice and such modification shall be effective immediately.

OLE RED

Type KX1

Specification Sheet

lumenfacade™

COLOR CHANGING

HOW TO ORDER

LOG							DMX/RDM	
1	2	3	4	5	6	7	8	9
	Select:	Select:	Select:	Select:	Select:	Select:		Select:

1

Housing:

LOG - Lumenfacade™

2

Voltage:

100 - 100 volts
120 - 120 volts
208 - 208 volts
220 - 220 volts
240 - 240 volts
277 - 277 volts

3

Length:

12 - 13 3/8 inches (340mm) (2 kg/4.5 lbs)
24 - 25 3/8 inches (645mm) (3.17 kg/7 lbs)
36 - 37 3/8 inches (949mm) (4.75 kg/10.5 lbs)
48 - 49 3/8 inches (1254mm) (6.35 kg/14 lbs)

4

Colors and Color temperatures:

RGB - Additive red, green and blue
RGBW - Additive red, green, blue and white 4000K

5

Optics:

WWLF - Asymmetric Wallwash optic, left feed[1]
WWRF - Asymmetric Wallwash optic, right feed[1]
10x10 - 10° x 10° [2]
10x60 - 10° x 60°
30x60 - 30° x 60°
60x60 - 60° x 60°

6

Mounting Option:

SAM - Slim Adjustable Mounting
UMP - Fixed Mounting[3]
UMAS - Universal Adjustable Mounting[3]
WAM2 - Adjustable Wall Mounting 2"
WAM6 - Adjustable Extended Arm Mounting 6"
WAM12 - Adjustable Extended Arm Mounting 12"
WAM18 - Adjustable Extended Arm Mounting 18"

7

Finish:

BK - Black Sandtex
SI - Silver Sandtex
WH - Smooth white
CC - Custom color and finish (please specify RAL color)[4]

8

Control:

DMX/RDM - DMX/RDM enabled[5]

9

Option:

ETE - End - to - end configuration, no jumper cable needed
CRC - Corrosion-resistant coating for hostile environments
3GV - 3G ANSI C136.31 Vibration Rating[6]

Notes:

[1] Right feeding side is standard unless otherwise specified. [2] For best results, we recommend a 6-inch (15cm) setback from surface. Contact factory for application support. [3] Suitable to use when **3GV** option is specified. [4] North American RAL colors specified with RAL number only are provided with a smooth/high-gloss finish. Please consult factory for other RAL textures and glosses, - or to match alternate color charts. Final color matching results may vary. [5] Fixtures set to by fixture resolution (consult the Resolution Details page for the number of DMX addresses). [6] Available with UMP and UMAS mounting options only.

© Copyright Lumenpulse 2016

1751 Richardson, Suite 1505
Montreal (Quebec) Canada
H3K 1G6

1.877.937.3003
P.514.937.3003
F. 514.937.6289
info@lumenpulse.com
www.lumenpulse.com

5-year limited warranty.

Consult www.lumenpulse.com for our complete Standard Terms and Conditions of Sales.

lumenpulse

Lumenpulse reserves the right to make changes to this product at any time without prior notice and such modification shall be effective immediately.

CM KLING + ASSOCIATES INC

ERCO

Cylinder Façade luminaire

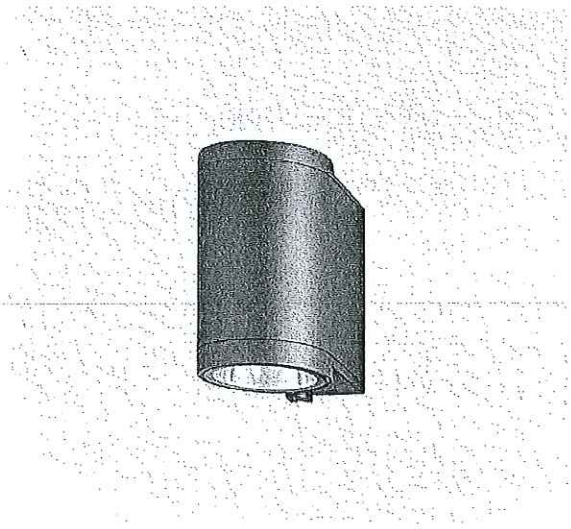

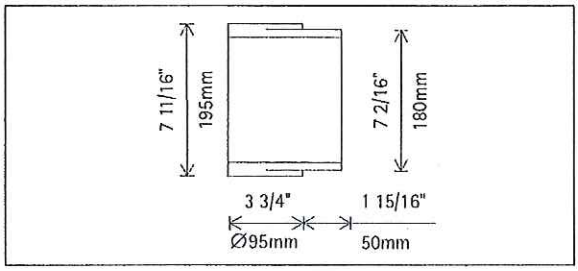

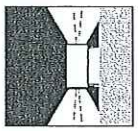

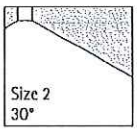

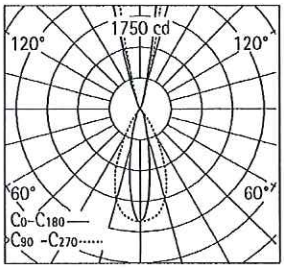

85110.023 Graphit m
LED 12W 1260lm 3000K warm white
Dimmable
Version 5
Spherolit lens, spot

Product description
Housing: corrosion-resistant aluminum profile, No-Rinse surface treatment. Double powder-coated. Optimized surface for reduced accumulation of dirt. Tamper-proof screw.
Cover and wall plate: corrosion-resistant cast aluminum.
Control gear, 60Hz, 120V dimmable, 277V switchable. 2 cable entries. Through-wiring possible. 3-pole terminal block.
LED module: high-power LEDs on metal-core PCB. Collimating lens made of optical polymer.
Front lens top: Spherolit lens, spot. Upper non-reflective safety glass.
Front lens bottom: Reflector: aluminum, silver, bright anodized. Spherolit lens, oval flood. Lower non-reflective safety glass.
Suitable for wet location (IP65): dust-proof and water jet-proof.
120V: Dimming with external dimmers possible (trailing edge).
Weight 4.19lbs / 1.90kg

Technical data

Luminous flux of the luminaire	954lm
Connected load	15W
Luminaire efficacy	64lm/W
Color deviation	2 SDCM
Color rendition index	CRI>90
Lumen maintenance	L90/B10 ≤50000h
LED failure rate	0.1% ≤50000h
LMF	E

For your regional contact in the ERCO Sales network click here
www.erco.com/contact

© ERCO GmbH 2017

Technical region: 120V/60Hz, 277V/60Hz
We reserve the right to make technical and design changes.
Edition: 27.01.2017
Current version under
www.erco.com/85110.023

ERCO

Cylinder Façade luminaire

Planning data

Cleaning (a)	1				2				3			
Ambient conditions	P	C	N	D	P	C	N	D	P	C	N	D
LMF	0.96	0.94	0.90	0.86	0.93	0.91	0.86	0.81	0.92	0.90	0.84	0.79
RSMF	0.94	0.89	0.80	0.69	0.93	0.88	0.79	0.69	0.93	0.88	0.79	0.69

Hours of operation (h)	1000	5000	10000	20000	30000	40000	50000
LLMF	1.00	0.99	0.98	0.96	0.94	0.92	0.90
LSF	1	1	1	1	1	1	1

MF	LMFxRSMFxLLMFxLSF
MF	Maintenance Factor
LMF	Luminaire Maintenance Factor
RSMF	Room Surface Maintenance Factor
LLMF	Lamp Lumens Maintenance Factor
LSF	Lamp Survival Factor
P	Room pure
C	Room clean
N	Room normal
D	Room dirty

Technical data based on international standards and directives

IEC 60598	Luminaires – Parts 1 + 2: General requirements, particular requirements and tests
IEC 62031	LED modules for general lighting – Safety specifications
IEC 62471	Photobiological safety of lamps and lamp systems
UL 1598	Luminaires
UL 1574	Standard for Track Lighting Systems
UL 8750	Standard for Light Emitting Diode (LED) Equipment for Use in Lighting Products
IES LM-79-08	Electrical and Photometric Measurements of Solid-State Lighting Products
IES LM-80-08	Measuring Lumen Maintenance of LED Light Sources
CIE 13	Method of measuring and specifying color rendering properties of light sources

ERCO

Cylinder Façade luminaire

Accessories

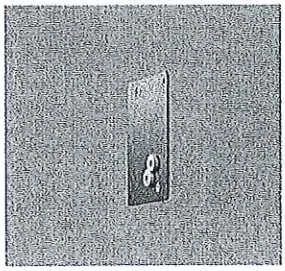

33137.023
Mounting plate
Corrosion-resistant cast aluminum, No-Rinse surface treatment. Graphit m, double powder-coated.
Weight 0.55lbs / 0.25kg

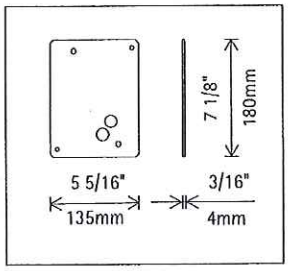

Specification Sheet

lumenfacade™
COLOR CHANGING

Client _____ **Project name** _____

Order# _____ **Type** _____ **Qty** _____

FEATURES AND BENEFITS

Physical :

- Low copper content extruded aluminum housing
- Available in 1', 2', 3' or 4' sections
- Electro-statically applied polyester powder coat finish
- Machined aluminum end caps and silicone gaskets
- Stainless steel hardware
- Clear tempered glass
- Asymmetric wallwash, 10° x 10°, 10° x 60°, 30° x 60° or 60° x 60° optics
- IP66
- IK07 rated (asymmetric wallwash lens is IK06 rated)
- Meets 3G ANSI C136.31 Vibration standard for bridge applications
- Corrosion-resistant coating for hostile environments**

c UL us CE RoHS CIDET CERTIFICADO No 05684, 05685 RETILAP **IK07***

Performance :

- Minimum 1fc (10.7 lux) @ 85 feet (26m) distance (RGBW full white, 4' unit, 10° x 60° optic)
- Color mixing options: RGB (3 channels) or RGBW (4 channels)
- Lumen maintenance L70 @ 25°C - 120,000 hrs
- Lumen measurements comply with LM - 79 - 08 standard
- Resolution per foot or per fixture (configured with LumenID V3 software & DMX/RDM)
- Operating temperatures: -25° C to 50° C [-13F to 122F]

4ft (full white)	Delivered Output [lm]	Intensity [peak cd]
RGB, 10°x60°	1,898	8,350
RGBW, 10°x60°	2,215	7,300
RGB, WW	1,565	2,464
RGBW, WW	1,956	2,993

Electrical :

- Line voltage luminaire for 100 to 277V
- Power and data in 1 cable (#16-5)
- Up to 112 feet with 1 power & data feed (277V)
- 17.25W/ft
- DMX/RDM enabled

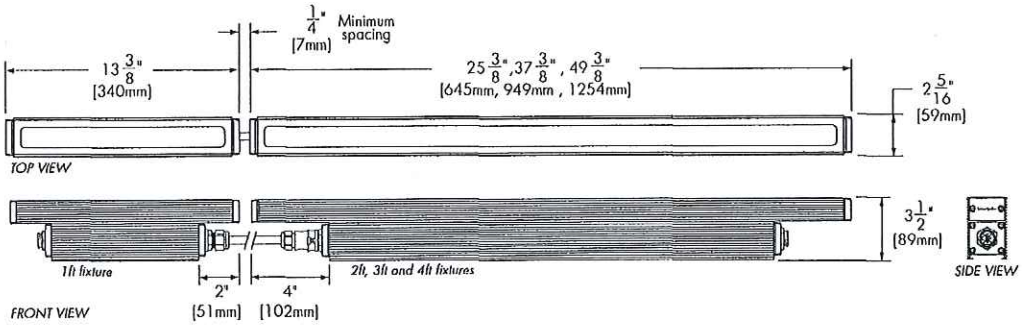

*Asymmetric wallwash lens is IK06 rated.
** Use only when exposed to salt spray and harsh chemicals. This option is not required for normal outdoor exposure!

08/JN/2016
N.Kassabian - Rev.37

© Copyright Lumenpulse 2016

1751 Richardson, Suite 1505
Montreal (Quebec) Canada
H3K 1G6

1.877.937.3003
P.514.937.3003
F. 514.937.6289
info@lumenpulse.com
www.lumenpulse.com

5-year limited warranty.

Consult www.lumenpulse.com for our complete Standard Terms and Conditions of Sales.

lumenpulse

Lumenpulse reserves the right to make changes to this product at any time without prior notice and such modification shall be effective immediately.

Specification Sheet

lumenfacade™
COLOR CHANGING

ASYMMETRIC WALLWASH OPTIC FEEDING SIDE DETAIL

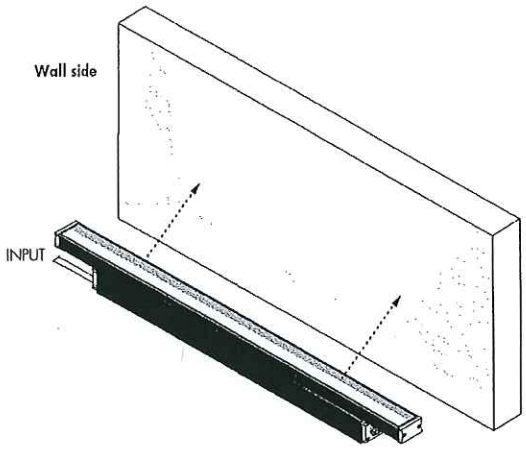

WWLF
Asymmetric Wallwash Optic, Left Feed

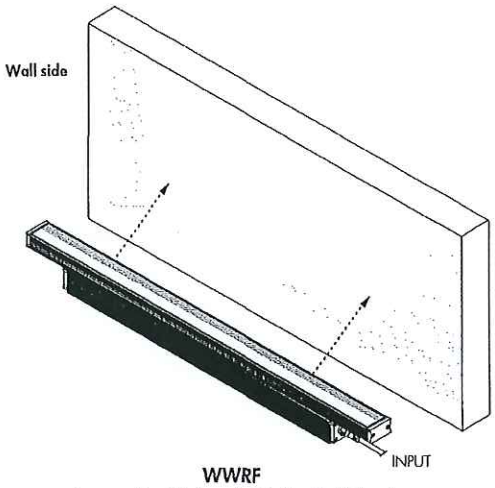

WWRF
Asymmetric Wallwash Optic, Right Feed

Always position frosted side toward the wall

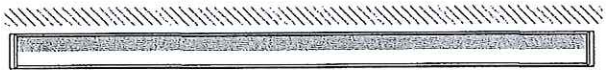

TOP VIEW

FRONT VIEW

RIGHT SIDE VIEW
(Fixture pointing upwards)

*Fixture's feeding side is based on uplight installations. Feeding sides are reversed when fixture is used in a downlight application.

Recommended setback from wall is 1/10 of the wall height.

Example: 2ft setback for a 20ft wall.

© Copyright lumenpulse 2016

1751 Richardson, Suite 1505
Montreal (Quebec) Canada
H3K 1G6

1.877.937.3003
P.514.937.3003
F. 514.937.6289
info@lumenpulse.com
www.lumenpulse.com

5-year limited warranty.

Consult www.lumenpulse.com for our complete Standard Terms and Conditions of Sales.

lumenpulse

lumenpulse reserves the right to make changes to this product at any time without prior notice and such modification shall be effective immediately.

Specification Sheet

lumenfacade™
COLOR CHANGING

MOUNTING OPTIONS

Surface Mount

SAM
Slim Adjustable Mounting

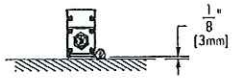

UMP
Fixed Mounting

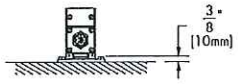

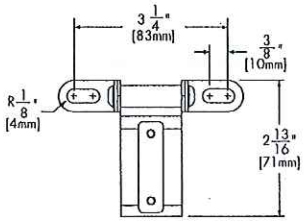

SAM
Mounting Hole Pattern

Wall Mount

UMAS
Universal Adjustable Mounting

WAM2
Adjustable Wall Mounting 2"

WAM6
Adjustable Extended Arm Mounting 6"

WAM12
Adjustable Extended Arm Mounting 12"

WAM18
Adjustable Extended Arm Mounting 18"

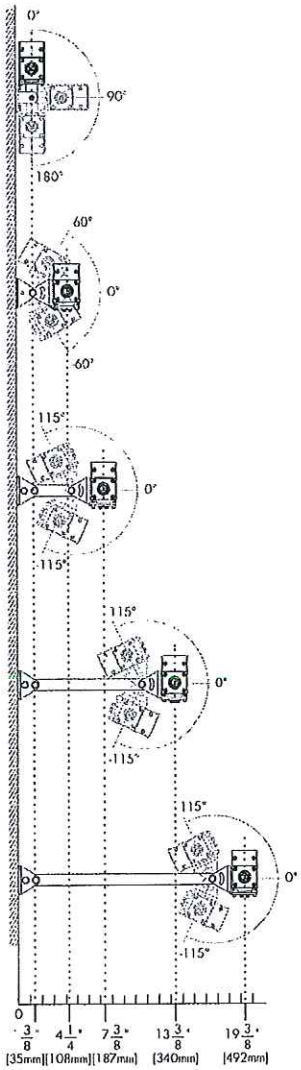

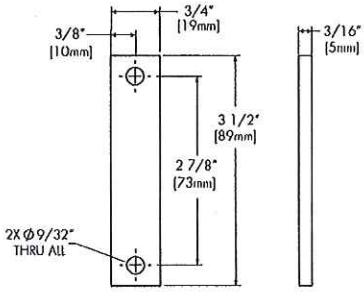

UMP
Mounting Hole Pattern

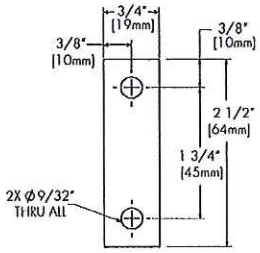

UMAS
Mounting Hole Pattern

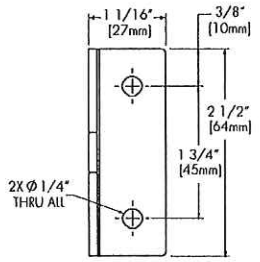

WAM
Mounting Hole Pattern

© Copyright Lumenpulse 2016

1751 Richardson, Suite 1505
Montreal (Quebec) Canada
H3K 1G6

1.877.937.3003
P.514.937.3003
F. 514.937.6289
info@lumenpulse.com
www.lumenpulse.com

5-year limited warranty.

Consult www.lumenpulse.com for our complete Standard Terms and Conditions of Sales.

lumenpulse

Lumenpulse reserves the right to make changes to this product at any time without prior notice and such modification shall be effective immediately.

Specification Sheet

lumenfacade™
COLOR CHANGING

OPTION

ETE - End-to-end configuration,
no jumper cable needed.
16" cable included at input.

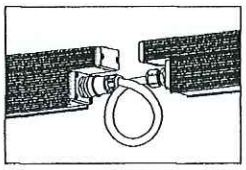

ACCESSORIES
Order separately

Control Systems:

LTO2 Lumentouch is a wall mount DMX 512 controller keypad.

LCU Lumencue is a USB / mini SD DMX 512 controller.

LID LumenID is a diagnostic and addressing DMX 512 controller.
It must be specified on all DMX applications.
Refer to LID specification sheet for details.

LTN Lumentone is a simple pre-programmed DMX 512 controller
with a push button rotary dial and live feedback.

Control Boxes:

CBX DMX/RDM control box.
Up to six power and data outputs to fixtures or fixture runs.
Ethernet enabled option.
Refer to CBX specification sheet for details.

Leader Cable :

LOGLCD__ Leader Cable for Lumenfacade.
Please add desired cable length : 10', 25' or 50' [3m, 7.6m or 15.2m] standard lengths
Sealing endcap is mandatory for any unused connector.
(1) included with every leader cable

LOGLCD__-ETE Leader Cable for Lumenfacade, ETE option.
Please add desired cable length : 10', 25' or 50' [3m, 7.6m or 15.2m] standard lengths
Sealing endcap is mandatory for any unused connector.
(1) included with every leader cable

Jumper Cable :

LOGJCD__ Jumper Cable for Lumenfacade.
Please add desired cable length : 2' or 4' [0.6m, 1.2m] standard lengths

LOGJCD__-ETE Jumper Cable for Lumenfacade, ETE option.
Please add desired cable length : 2' or 4' [0.6m, 1.2m] standard lengths

---

© Copyright Lumenpulse 2016

1751 Richardson, Suite 1505
Montreal (Quebec) Canada
H3K 1G6

1.877.937.3003
P.514.937.3003
F. 514.937.6289
info@lumenpulse.com
www.lumenpulse.com

5-year limited warranty.

Consult www.lumenpulse.com
for our complete Standard Terms
and Conditions of Sales.

lumenpulse

Lumenpulse reserves the right to make changes to this product at any time without prior notice and such modification shall be effective immediately.

MEGAN BARRY
MAYOR

METROPOLITAN GOVERNMENT OF NASHVILLE AND DAVIDSON COUNTY

Metropolitan Historic Zoning Commission
Sunnyside in Sevier Park
3000 Granny White Pike
Nashville, Tennessee 37204
Telephone: (615) 862-7970
Fax: (615) 862-7974

STAFF RECOMMENDATION

Broadway, Second Avenue and Downtown Historic Preservation Zoning Overlays
July 19, 2017

Application: Building and Signage Illumination Policy
District: Broadway and Second Avenue Historic Preservation Zoning Overlays
Council District: 19
Map and Parcel Number: multiple
Project Lead: Robin Zeigler, robin.zeigler@nashville.gov

Description of Project: Recommendation of a policy regarding building and signage illumination to provide clarification of existing design guidelines. **Recommendation Summary:** Staff recommends adoption of the italicized information for building illumination; noted previously as additional guidance for applicants regarding existing design guidelines. Further, staff recommends consideration of a more comprehensive revision of the design guidelines to include the ability to have LED bulbs on signage.	**Attachments** **A:** Meeting Minutes **B**: Partner Comments

Applicable Design Guidelines:

I. INTRODUCTION

B. *By state law, all design guidelines for historic preservation zoning overlays must comply with the* Secretary of the Interior's Standards for Treatment of Historic Properties*:*

1. A property shall be used for its historic purpose or be placed in a new use that requires minimal changes to the defining characteristics of the building and its site and environment.

2. The historic character of a property shall be retained and preserved. The removal of historic materials or alteration of features and spaces that characterize a property shall be avoided.

3. Each property shall be recognized as a physical record of its time, place, and use. Changes that create a false sense of historical development, such as adding conjectural features or architectural elements from other buildings, shall not be undertaken.

4. Most properties change over time; those changes that have acquired historical significance in their own right shall be retained and preserved.

5. Distinctive features, finishes, and construction techniques or examples of craftsmanship that characterize a property shall be preserved.

6. Deteriorated historic features shall be repaired rather than replaced. Where the severity of deterioration requires replacement of a distinctive feature, the new feature shall match the old in design, color, texture, and other visual qualities and, where possible, materials. Replacement of missing features shall be substantiated by documentary, physical, or pictorial evidence.

7. Chemical or physical treatments, such as sandblasting, that cause damage to historic materials shall not be used. The surface cleaning of structures, if appropriate, shall be undertaken using the gentlest means necessary.

8. Significant archeological resources affected by a project shall be protected and preserved. If such resources must be disturbed, mitigation measures shall be undertaken.

9. New additions, exterior alterations, or related new construction shall not destroy historic materials that characterize the property. The new work shall be differentiated from the old and shall be compatible with the massing, size, scale, and architectural features to protect the historic integrity of the property and its environment.

10. New additions and adjacent or related new construction shall be undertaken in such a manner that if removed in the future. The essential form and integrity of the historic property and its environment would be unimpaired.

II. Rehabilitation

T. Lighting

1. If lighting is installed, it should be concealed or simple and unobtrusive in design, materials, and relationship to other façade or elevation elements.
2. Light should be directed toward the façade instead of outward. Building facades may be illuminated through uplights mounted above the storefront cornice.
3. Dark metals are appropriate materials for light fixtures.
4. Concealed, indirect, or spot lighting is appropriate for exterior signage. Visible fluorescent or incandescent bulbs are not appropriate.

IV.SIGNAGE
Illumination

Illumination of signs shall be in accordance with the following requirements:

External Illumination
· External light sources shall be placed close to, and directed onto the sign and shielded to minimize glare into the street, sidewalks or onto adjacent properties.
· Projecting light fixtures used for externally illuminated signs shall be simple and unobtrusive in appearance. They should not obscure the sign.

Internal Illumination
· Channel letters may be internally lit or back-lit.
· For cabinet signs, the background must be opaque. Only graphics, text and logs may be illuminated, and a halo of one inch around graphics, text, and logos may be non-opaque.
· Exposed neon may be used for lettering or as an accent.

Prohibited Light Sources
The following light sources are prohibited:
· Blinking, flashing, chasing, and sequential lighting. This type of lighting may be allowed for Broadway (not the district but the street) only through a modification. In these cases, the chase or flash should not last less than every three seconds.
· Bare bulb illumination.

Raceways and Transformers
· Visible transformers are prohibited.

Background: The MHZC hosted a public charrette on June 19, 2017 for educational purposes and to obtain feedback from the public. Please see attached minutes.

Analysis and Findings:

Staff recommends the addition of italicized information to the Broadway, Second Avenue and Downtown Historic Preservation Zoning Overlays design guidelines to provide further direction on the existing design guidelines. Staff further recommends the consideration of formally adopting non-italicized changes to the design guidelines. Additional guidance is necessary due to the changes in lighting options over the last few years.

Following is existing language regarding building and signage illumination with proposed new language underlined. Italicized language is not part of the formally adopted design guidelines but provides further direction regarding the Commission's interpretation of the design guidelines.

<u>Building Illumination</u>

T. Lighting

1. If lighting is installed, it should be concealed or simple and unobtrusive in design, materials, and relationship to other façade or elevation elements.

- *Colored bulbs or filters are not appropriate. Warm white light that does not distort the color of the building's materials or finishes is appropriate.*
- *Floodlights, spotlights, mercury vapor, sodium vapor, fluorescent tube lamp and CFL lamps and/or colored lights are not appropriate.*
- *Lighting fixtures and illumination should not flash, spin or be animated in any manner.*
- *Conduits, junction boxes and wires should not be visible on street-facing facades.*

2. Light should be directed toward the façade instead of outward. Building facades may be illuminated through uplights mounted above the storefront cornice.

- *Light fixtures installed directly above or behind the storefront cornice are appropriate; however, light fixtures above those locations are inappropriate.*
- *Exterior lighting of rooftop additions is inappropriate as the visibility of rooftop additions should be minimized. Rooftop decks may be lighted with ground and/or table lighting. Entrances of rooftop decks may have minimal lighting to provide for safety.*
- *Hardware should be installed in masonry joints rather than through the brick.*

3. Dark metals are appropriate materials for light fixtures.

- *The fixture could also be of a color to match the surface upon which it is mounted.*

4. Concealed, indirect, or spot lighting is appropriate for exterior signage. Visible fluorescent or incandescent bulbs are not appropriate.

The MHZC does not review temporary lighting, such as seasonal or event lighting that has minimal installation and is not in place for more than 30 days.

Staff finds that this italicized and underlined information provides clarification of existing design guidelines. There is concern by staff and by the State Historic Preservation Office that colored lighting would not meet the Secretary of Interior Standards, which the design guidelines are required to do based on state law. Colored building illumination has the potential to change the look of, or obscure, architectural features, which does not meet standard 5 and 9. (See public comment.)

Signage Lighting

Following is existing language regarding signage illumination with proposed new language underlined and information proposed to be removed shown as stricken text.

Prohibited Light Sources
The following light sources are prohibited:
· Blinking, flashing, chasing, and sequential lighting. This type of lighting may be allowed for Broadway (not the district but the street) only through a

modification. In these cases, the chase or flash should not last less than every three seconds.
~~· Bare bulb illumination.~~
Chasing lights on Broadway shall only be one element of any one side of a projecting sign, such as one word or one image that may have repeating parts. The one word or one image may repeated on the opposite side of a projecting sign. Rope lighting (also known as "strand lighting, lite ropes, flexible impact lighting, tubular lighting, and string lighting) is prohibited.

T. Lighting

4. Concealed, indirect, or spot lighting is appropriate for exterior signage. Visible fluorescent or incandescent bulbs are not appropriate.
5. LED bulbs made to look like incandescent bulbs (A-shape) are appropriate if all the bulbs are the same color and the bulbs do not blink, flash, chase or have sequential lighting.

Bare bulbs on signage have been a frequent request; however, they have not been allowed since at least the 1970s, decades prior to the establishment of the overlays. Neither the MDHA design guidelines nor the Downtown Code allow for bare bulb signage. Staff finds that most other cities also prohibit bare bulb signage. Staff suspects that this is the case because bulbs could break easily and if not replaced, create a blighted look. Bulbs today are manufactured to be much more resilient and are not as easily broken. For this reason, and because bare bulbs were used on historic signage in the general downtown area, staff recommends approval of bare bulbs with some requirements. Because the design guidelines specifically prohibit bare bulbs, this change will require a noticed revision to the design guidelines rather than just the addition of italicized information. Staff also recommends italicized information be added that is consistent with section 17.28.100 of Metro Code regarding rope lighting. There are other revisions, not related to building and signage illumination that staff recommends for the design guidelines. The information regarding bare bulbs could be added at the time of that revision, if such a revision moves forward.

Recommendation
Staff recommends adoption of the italicized information for building and signage illumination, noted previously, finding that it provides additional guidance to existing design guidelines.

Further, staff recommends consideration of a more comprehensive revision of the design guidelines that could include the ability to have LED bulbs on signage.

PARTNER COMMENTS

MEMORANDUM

TO: Robin Zeigler
FROM: Claudette Stager
RE: Washing historic buildings with light
DATE: July 12, 2017

The Secretary of the Interior's Standards is the primary resource used to maintain the historic character of buildings. While not mentioning washing buildings with lights of different color, the Standards do mention maintaining the historic character of buildings. Washing buildings in lights may obscure historic features of buildings, making them appear non-historic. Temporary washing of buildings in lights for special occasions like holidays is acceptable but permanent washing of buildings in lights can be considered a change in the historic character of a building.

In addition, light pollution, sometimes caused by merchants competing with each other for bigger and brighter signs, detracts from the historic character of neighborhoods by changing the focus from the historic buildings to their new lighting and/or signage. All buildings change over time, but too many changes mean you no longer have a historic resource. Changing lighting on historic buildings should be done in a matter that is compatible to the historic buildings.

MEGAN BARRY
MAYOR

METROPOLITAN GOVERNMENT OF NASHVILLE AND DAVIDSON COUNTY

Metropolitan Historic Zoning Commission
Sunnyside in Sevier Park

METRO HISTORIC ZONING COMMISSION (MHZC)
MINUTES

June 19, 2017

Building & Signage Illumination Charrette

MHZC Members: Vice Chair Bell, Kaitlin Jones, Elizabeth Mayhall, Ben Mosley, Cyril Stewart
MHZC Staff: Tim Walker, Robin Zeigler, Sean Alexander, Melissa Baldock, Paul Hoffman.
Presenters: Anthony Denami, Phil Thomason, Bobby Joslin, Dan Brown, Andrew Collins
Public: Seab Tuck, Janie Wright, David Ghatan, Sam Reed, Brian Taylor, Charles Robert Bone, Jenn Harman, Claudette Stager, Dan Brown, Jane-Coleman Harbison, Usaann DuPont

Anthony Denami provided an overview of lighting types. No questions or comments.

Bobby Joslin, from Joslin & Sons, presented information about the use of bare bulbs in signage. Ms. Zeigler explained that such has not been allowed since the 1970s and it may be because bulbs were not as well made as they are now and could break easily, not be replaced, and therefore create a blighted look. Mr. Joslin explained that bulbs have changed and that the LED is the type we are most likely to see requests for. He said that the Paradise Park sign, which has had bulbs for multiple years, has not needed replacements since the installation of modern bulbs. Ms. Zeigler asked if Mr. Joslin had any recommendations for the type of bulbs or finish of bulbs they should consider. Mr. Joslin said that we might want to keep them a consistent color on one sign to avoid the "circus look." Commissioner Stewart asked about controls for the brightness of the light and Mr. Joslin responded that it is a tough issue because it depends on multiple factors such as sign location, height, other signs/lights nearby, trees, etc.

Dan Brown, from the Tennessee Historical Commission, explained that he was a part of researching lighting tfor design guidelines for the Vieux Carre. He provided some background on the research and how they addressed the Secretary of Interior Standards. Seab Tuck said that upper levels are not currently lighted and lighting them in any color would be better than no lighting. Mr. Brown responded that Nashville's standards need to be in line with what other cities do and the secretary of interior's standards. Bobby Joslin said that the National Park Service says that if guidelines are too specific signage can go against the diversity of an historic district. Mr. Brown countered that guidelines that are too broad can diminish the safety and authenticity of the historic area.

Phil Thomason, preservation consultant, noted that the issues Nashville is dealing with in terms of lighting has not been an issue for other cities. David Ghatan (architectural lighting designer) said there are signs that have colored light. Jane-Coleman Harbison asked about how you know how much lighting affects the historic character of a building and what is appropriate. Thomason suggested experimentation. Claudette Stager expressed concern with the amount of change over time or at once, and the impact that has on the building's historic integrity. David Ghatan asked, rhetorically, how do you build a vocabulary that works for different buildings with different ideas and technology.

Andrew Collins, from the Planning Department explained the goal of the DTC, on which the current design guidelines are based and the initial desire to decrease clutter. Brian Taylor remarked that a lot has changed since the development of the DTC standards, which he helped to create, and so should be looked at again. He stated that signage is more important to creating the pedestrian experience than lighting upperstories.

RESPONSES FROM GUIDED DISCUSSION

General Comments:
Maintain architectural character and authenticity
For certain occasions can be appropriate but not as a permanent or nightly features
Color and content of sign are not in purview of MHZC
Concern for too many changes that could negatively impact historic cohesiveness of district leading to potential for delisting NR
The character is the signage and the tourist district.
To add to "considerations" I think the creative intent behind the project is important. Is it to illuminate architecture of marketing/entertainment.
So much of the "character" of modern day Broadway has occurred in the last 10 years, and the interest in investing in that area is at an all-time high. We should encourage experimentation and investment in this time, not restrict it.

Could colored building illumination have a negative effect on the historic character of the district or an individual building?
No: 9
Yes: 4

In terms of building illumination what are the three most important considerations that should have associated requirements in the guidelines? Please mark up to 3.
Accentuation of architectural features: 11
Color and color rendering: 8
Purpose of lighting: safety, building identification, storefront visibility, etc.: 7
Original color of building: 6
Location of building fixture: 5
Illumination intensity: 3
Exposed conduit and wiring: 2
Design of visible fixtures: 2
Dimensions of fixtures: 2
Glare and brightness: 1
Color temperature: 1
Location of building light wash: 0
Illumination kept to ground floor: 0
Uniformity and darkness: 0
Durability of fixture: 0
Daylight/nighttime control: 0

If allowed, should bare bulbs be limited to the Broadway HPZO in order to allow Broadway to remain unique?
No: 14
Yes: 2

Could bare bulbs have a negative effect on the historic character of the district or an individual building?
No: 14
Yes: 2

If bare bulbs are allowed on signage, what are the most important considerations that should have associated requirements in the guidelines? Please mark up to 3.
Lighting intensity: 10
Ability of bulbs to flash or chase: 9
Type of sign that allows for bare bulbs: 9
Color of bulb: 6
Integral part of the sign: 2
Percentage of signage that includes bulbs: 1
Finish of bulb: matte, frosted, shiny, etc: 1

In terms of signage illumination, what are the 3 most important considerations that should have associated requirements in the guidelines. Please mark up to 3.

Glare and brightness: 11
Chasing/flashing: 8
Day/night control: 5
Illumination intensity: 4
Combination of effects:3
Different types of lights for different types of signs: 3
Color temperature: 2
Color and color rendering: 1
Controls based on available light: 0