ACTIVITY: Temporary Inlet Protection

TCP – 24

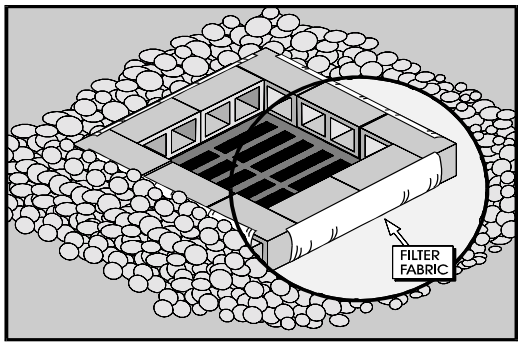

Targeted Constituents				
● Significant Impact		◗ Partial Impact	○ Low or Unknown Impact	
● Sediment	○ Heavy Metals	◗ Floatable Materials	○ Oxygen Demanding Substances	
○ Nutrients	○ Toxic Materials	○ Oil & Grease	○ Bacteria & Viruses	○ Construction Wastes

Implementation Requirements				
● High		◗ Medium	○ Low	
◗ Capital Costs	○ O & M Costs	◗ Maintenance	○ Suitability for Slopes >5%	○ Training

Description

Various devices which detain sediment-laden runoff and allow the sediment to settle prior to discharge into a stormwater inlet or catch basin. This management practice is likely to create a significant reduction in sediment and a partial reduction in floatable materials.

Suitable Applications

- Every storm drain inlet or catch basin receiving sediment-laden runoff should be protected, either by covering the inlet or promoting sedimentation upstream of the inlet.
- Where ponding will not encroach into access road or highway traffic.
- Where disturbed tributary areas have not yet been permanently stabilized.
- Where the drainage area is ½ acre (0.2 ha) or less. Areas draining greater than ½ acre (0.2 ha) must be accompanied by a downstream sediment trap or basin.
- Appropriate during wet and snow-melt seasons.

Installation/ Application

- Storm inlet protection consists of a sediment filter or an impounding area around or upstream of a storm drain, drop inlet, or curb inlet. This erosion and sedimentation control BMP prevents excessive sediment from entering stormwater management systems prior to permanent stabilization of the disturbed area. All on-site storm drain inlets should be protected. Off-site, inlets should be protected in areas where construction activity tracks sediment onto paved areas or where inlets receive runoff from disturbed areas. Different types of inlet protection are appropriate for different applications depending on site conditions and the type of inlet.
- Four types of inlet protection are presented below, however, it is recognized that several other effective methods and proprietary devices exist and may be selected:

- Block and Gravel Filter: Appropriate for flows greater than 0.5 cfs (0.01 m^3/s).
- Gravel and Wire Mesh Filter: Used on curb or drop inlets where construction equipment may drive over the inlet.
- Sand bag barrier: Used to create a small sediment trap upstream of inlets on sloped, paved streets.
- Excavated Drop Inlet Sediment Trap: An excavated area around the inlet to trap sediment (see Sediment Traps TCP-17).

Select the appropriate type of inlet protection and design as referred to or as described in this fact sheet.

- Grates and spaces around all inlets should be sealed to prevent seepage of sediment-laden water.

- Excavate sediment sumps (where needed) 1 to 2 feet (0.31 to 0.63 m) with 2:1 (H:V) side slopes around the inlet.

- Provide area around the inlet for water to pond without flooding structures and property.

Installation Procedure for Block and Gravel Filter:

a. Place hardware cloth or comparable wire mesh with one-half inch (1.3 cm) openings over the drop inlet so that the wire extends a minimum of 1 foot (0.31 m) beyond each side of the inlet structure. If more than one strip is necessary, overlap the strips. Place filter fabric over the wire mesh.
b. Place concrete blocks lengthwise on their sides in a single row around the perimeter of the inlet, so that the open ends face outward, not upward. The ends of adjacent blocks should abut. The height of the barrier can be varied, depending on design needs, by stacking combinations of blocks that are 4 inches (10.2 cm), 8 inches (20.3 cm), and 12 inches (30.5 cm) wide. The row of blocks should be at least 12 inches (30.5 cm) but no greater than 24 inches (61 cm) high.
c. Place wire mesh over the outside vertical face (open end) of the concrete blocks to prevent stone from being washed through the blocks. Use hardware cloth or comparable wire mesh with one half-inch (1.3-cm) openings.
d. Pile washed stone against the wire mesh to the top of the blocks. Use ¾- to 3-inch (1.9- to 7.6-cm) gravel.

Installation Procedure for Gravel and Wire Mesh Filters:

a. Place wire mesh over the drop inlet so that the wire extends a minimum of 1 foot (0.31 m) beyond each side of the inlet structure. Use hardware cloth or comparable wire mesh with one-half inch (1.3-cm) openings. If more than one strip of mesh is necessary, overlap the strips. Place filter fabric over wire mesh.
b. Place ¾ to 3-inch (1.9- to 7.6-cm) gravel over the filter fabric/wire mesh. The depth of the gravel should be at least 12 inches (30.5 cm) over the entire inlet opening.
c. Excavated Drop Inlet Sediment Trap – Size excavated drop inlet to provide a minimum storage capacity calculated at the rate of 67 yd^3/ac (134 m^3/ha) of tributary area.

Installation Procedure for Sand Bag Barrier:

a. Use sand bag made of geotextile fabric (not burlap), and fill with ¾ in. (1.9 cm) rock or ¼ in. (0.64 cm) pea gravel.
b. Construct on gently sloping street.
c. Leave room upstream of barrier for water to pond and sediment to settle.
d. Place several layers of sand bags—overlapping the bags and packing them tightly together.
e. Leave gap of one bag on the top row to serve as a spillway. Flow from a severe storm (up to a 10-year storm) should not overtop the curb.

Maintenance

- Replace clogged filter fabric or stone filters immediately.
- Remove sediment when depth exceeds half the height of the filter, or half the depth of the sediment trap.
- Inspect all inlet and catch basin protection devices weekly, before and after every rainfall event. During extended rainfall events, inspect inlet protection devices at least once every 24 hours.
- Inspect the storm drain inlet or other infrastructure downstream after severe storms in the rainy season to check for bypassed material.
- Remove all inlet protection devices within thirty days after the site is stabilized, or when the inlet protection is no longer needed.
  - Bring the disturbed area to final grade and smooth and compact it. Appropriately stabilize all bare areas around the inlet.
  - Clean around and inside the storm drain inlet as it must be free of sediment and debris at the time of final inspection.

Limitations

- Use only when ponding will not encroach into access roads, highway traffic, or onto erodible surfaces and slopes.
- Sediment removal may be difficult in high flow conditions or if runoff is heavily sediment laden. If high flow conditions are expected, use other on-site sediment trapping techniques in conjunction with inlet protection.

- Frequent maintenance is required.
- For drainage areas larger than ½ acre (0.2 ha), runoff should be routed to a sediment trap or basin designed for larger flows.
- Runoff will bypass protected inlets on slopes.
- Block and gravel filter and sand bag barriers for inlet protection are applicable when sheet flows or concentrated flows exceed 0.5 cfs (0.014 m^3/s), and it is necessary to allow for overtopping to prevent flooding.
- Excavated drop inlet sediment traps are appropriate where relatively heavy flows are expected and overflow capability is needed.

Additional Information

Large amounts of sediment may enter the storm drain system when storm drains are installed before the upslope tributary area is stabilized, or where construction is adjacent to an existing storm drain. In cases of extreme sediment loading, the storm drain itself may clog and lose a major portion of its capacity. To avoid these problems, it is necessary to prevent sediment from entering the system at the inlets.

Primary References

California Storm Water Best Management Practice Handbooks, Construction Handbook, CDM et.al. for the California SWQTF, 1993.

Caltrans Storm Water Quality Handbooks, CDM et.al. for the California Department of Transportation, 1997.

Subordinate References

Best Management Practices and Erosion Control Manual for Construction Sites, Flood Control District of Maricopa County, Arizona, September 1992.

"Draft – Sedimentation and Erosion Control, An Inventory of Current Practices", U.S.E.P.A., April 1990.

Erosion and Sediment Control Handbook, S.J. Goldman, K. Jackson, T.A. Bursetynsky, P.E., McGraw Hill Book Company.

Manual of Standards of Erosion and Sediment Control Measures, Association of Bay Area Governments, June 1981.

Proposed Guidance Specifying Management Measures for Sources of Nonpoint Pollution in Coastal Waters, Work Group Working Paper, USEPA, April 1992.

Stormwater Management Water for the Puget Sound Basin, Washington State Department of Ecology, The Technical Manual – February 1992, Publication #91-75.

Storm Water Pollution Prevention Handbook, First Edition, State of California, Department of Transportation Division of New Technology, Materials, and Research, October 1992.

Inspection Checklist

- Block and Gravel Filter

  - Make sure the blocks are in good shape and not displaced.
  - Check the gravel piled around the blocks to make sure gravel is not washing through the fabric and blocks.
  - Do not clean gravel adjacent to any inlet or waterway.
  - Remove sediment behind the gravel pack when it reaches one-third the block height

- Sand Bag Barrier

  - Inspect bags for holes, gashes, and snags.
  - Check sand bags for proper arrangement and displacement. Remove the sediment behind the barrier when it reaches one-third the height of the barrier.

- Excavated Drop Inlet Sediment Trap

  - Remove sediment from basin when the volume of the basin has been reduced by one-half.

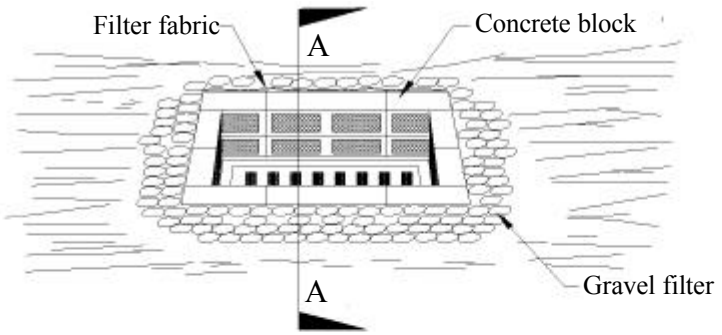

NOTES:
1. Use clean ¾ in. (19 mm) gravel or approved equal.
2. Periodically change gravel with new, clean gravel. Old gravel may be used as backfill material if approved by Engineer.

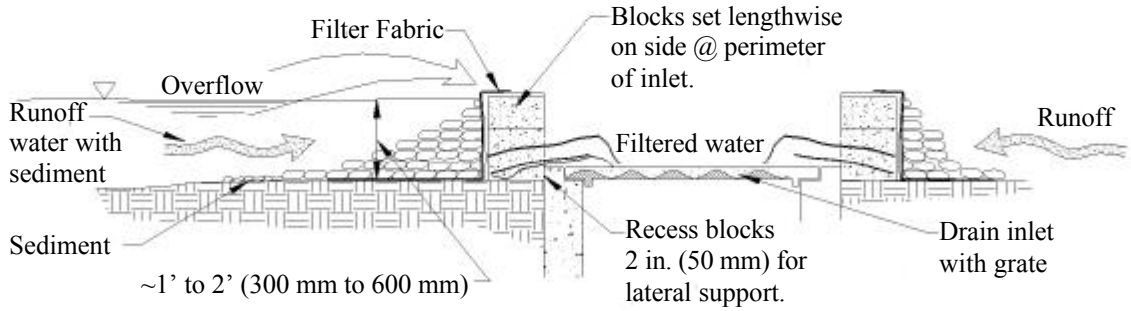

WITHOUT CURB

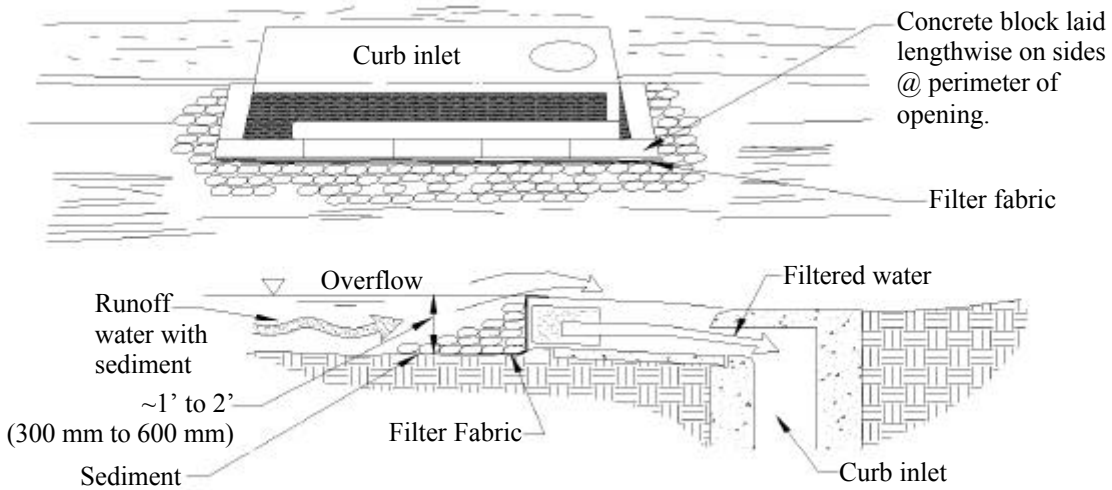

WITH CURB

Figure TCP-24-2
Block and Gravel Catch Basin Filter

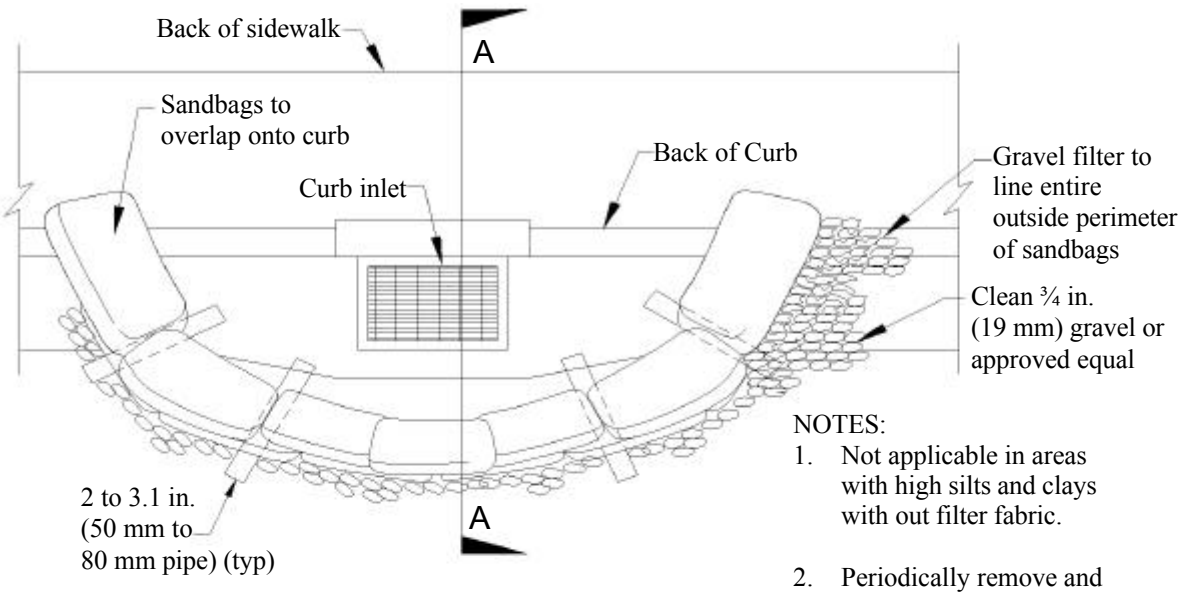

PLAN

NOTES:

1. Not applicable in areas with high silts and clays with out filter fabric.
2. Periodically remove and replace gravel. Old gravel may be used as backfill material if approved by Engineer.

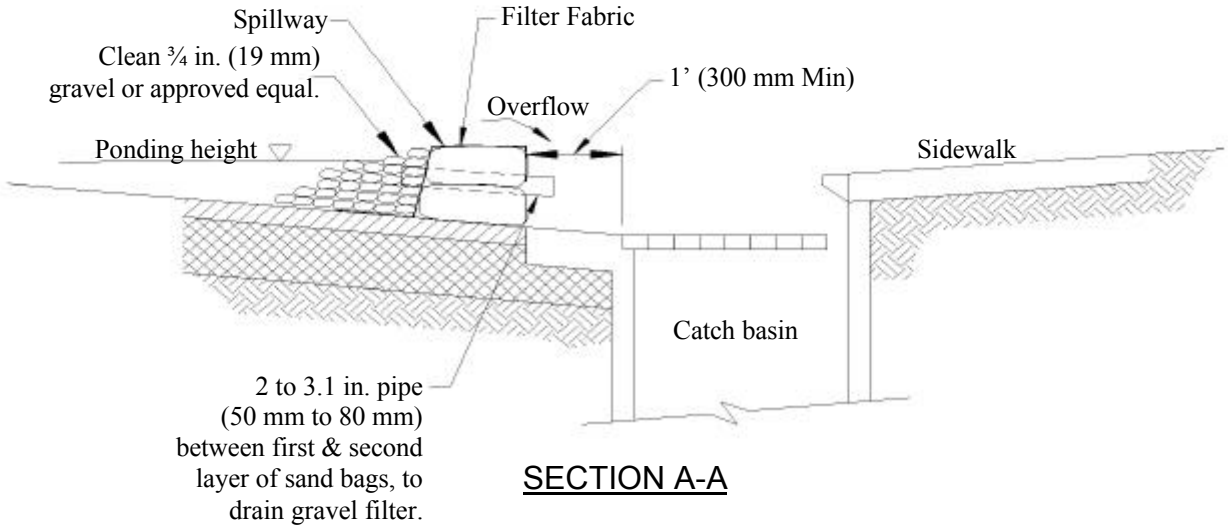

SECTION A-A

Figure TCP-24-3
Sand Bag Barrier

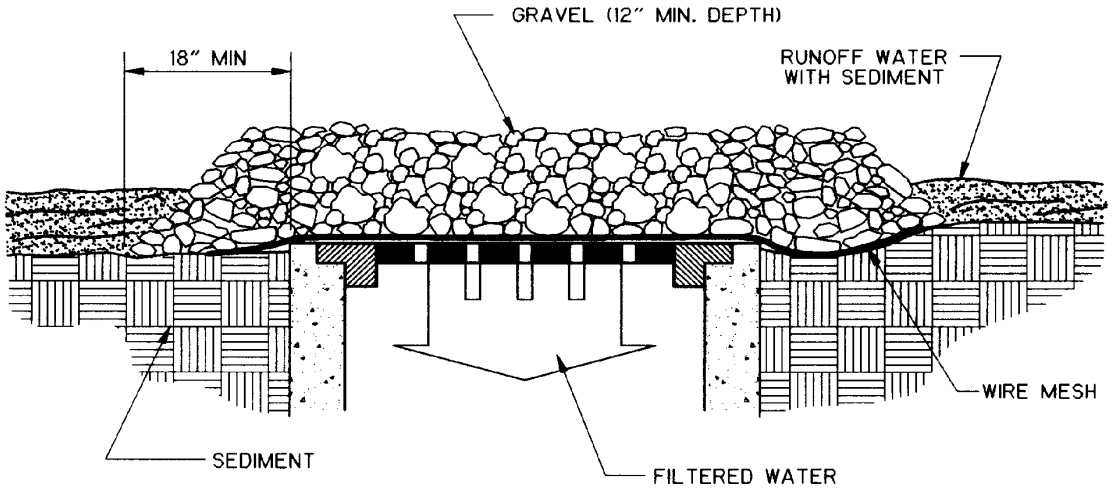

SPECIFIC APPLICATION

THIS METHOD OF INLET PROTECTION IS APPLICABLE WHERE HEAVY CONCENTRATION FLOWS ARE EXPECTED, BUT NOT WHERE PONDING AROUND THE STRUCTURE MIGHT CAUSE EXCESSIVE AND UNPROTECTED AREAS.

Figure TCP-24-4
Wire Mesh and Gravel Inlet Filter

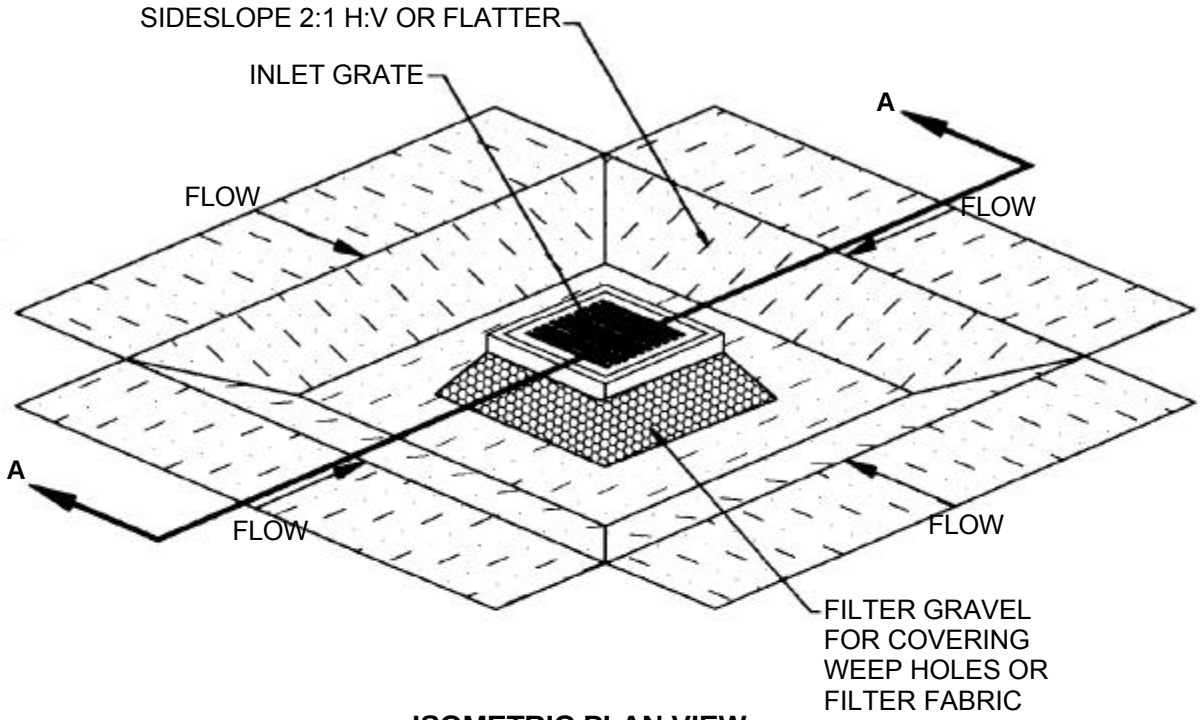

ISOMETRIC PLAN VIEW
N.T.S.

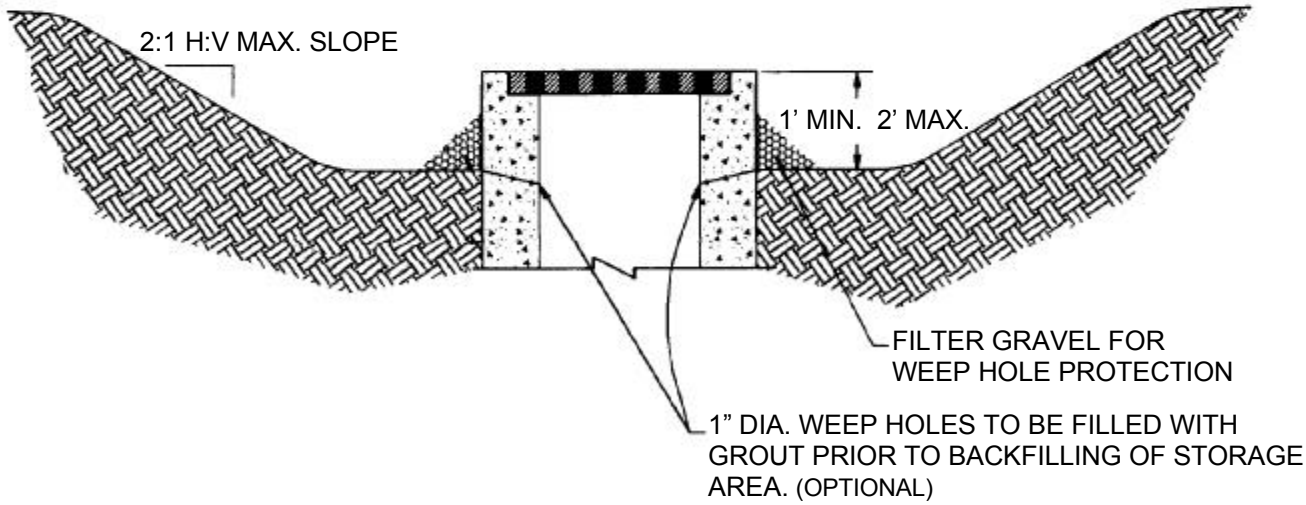

SECTION A-A
N.T.S.

Figure TCP-24-5
Inlet Impoundment/Trap