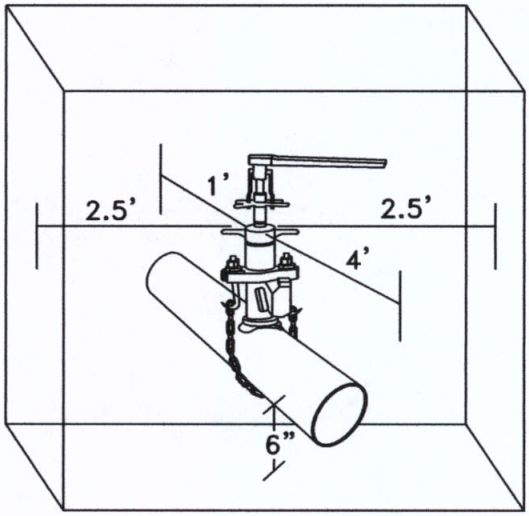

PERSPECTIVE VIEW
N.T.S.

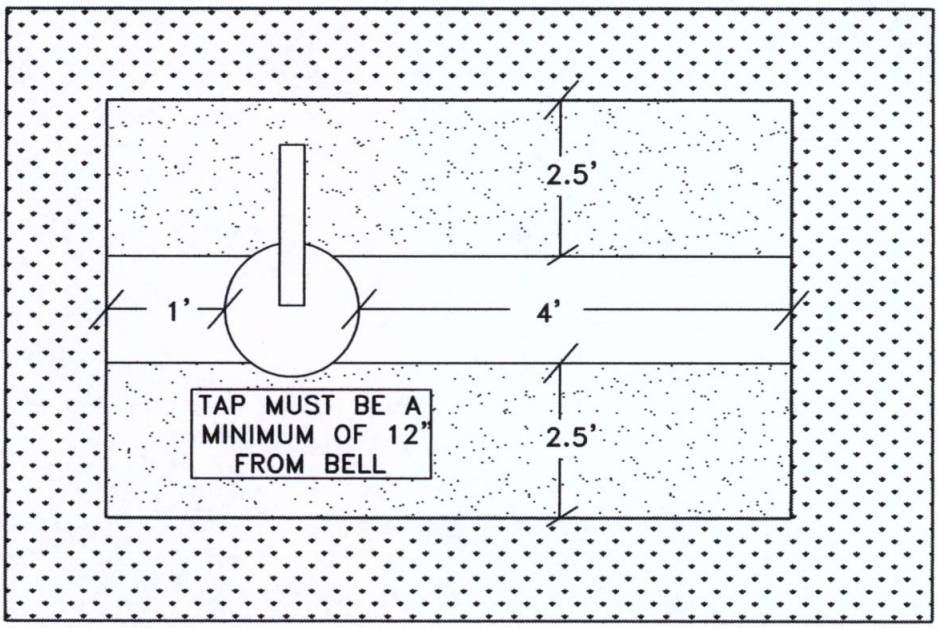

PLAN VIEW
N.T.S.

NOTE: EXCAVATION MUST COMPLY WITH CURRENT OSHA/TOSHA REGULATION.

METRO WATER SERVICES	Hal Balthrop LICENSED DISTRIBUTION OPERATOR
B-101 DRILLING MACHINE DETAIL	
NOT TO SCALE / DATE: 05/05/08	
DWG. NO. WDET034	DIRECTOR OF WATER AND SEWERAGE SERVICES

METRO WATER SERVICES