Proposal No. 2018M-016EN-001

ACORD

CERTIFICATE OF LIABILITY INSURANCE

DATE (MM/DD/YYYY): 07/19/2018

THIS CERTIFICATE IS ISSUED AS A MATTER OF INFORMATION ONLY AND CONFERS NO RIGHTS UPON THE CERTIFICATE HOLDER. THIS CERTIFICATE DOES NOT AFFIRMATIVELY OR NEGATIVELY AMEND, EXTEND OR ALTER THE COVERAGE AFFORDED BY THE POLICIES BELOW. THIS CERTIFICATE OF INSURANCE DOES NOT CONSTITUTE A CONTRACT BETWEEN THE ISSUING INSURER(S), AUTHORIZED REPRESENTATIVE OR PRODUCER, AND THE CERTIFICATE HOLDER.

IMPORTANT: If the certificate holder is an ADDITIONAL INSURED, the policy(ies) must have ADDITIONAL INSURED provisions or be endorsed. If SUBROGATION IS WAIVED, subject to the terms and conditions of the policy, certain policies may require an endorsement. A statement on this certificate does not confer rights to the certificate holder in lieu of such endorsement(s).

PRODUCER
Robins Insurance Agency, Inc
30 Burton Hills Blvd.
Suite 300
Nashville TN 37215

CONTACT NAME: Megan Champ
PHONE (AIC, No, Ext): (615) 665-9200 FAX (AIC, No): (615) 665-9207
E-MAIL ADDRESS: mchamp@robinsins.com

INSURER(S) AFFORDING COVERAGE	NAIC #
INSURER A: Tokio Marine Specialty Insurance Company	23850
INSURER B: Society Insurance	15261
INSURER C:	
INSURER D:	
INSURER E:	
INSURER F:	

INSURED
LOSERS LLC DBA: Losers Most Wanted Bar
1000 18th Ave South
Nashville TN 37212

COVERAGES CERTIFICATE NUMBER: 17/18 Master REVISION NUMBER:

THIS IS TO CERTIFY THAT THE POLICIES OF INSURANCE LISTED BELOW HAVE BEEN ISSUED TO THE INSURED NAMED ABOVE FOR THE POLICY PERIOD INDICATED. NOTWITHSTANDING ANY REQUIREMENT, TERM OR CONDITION OF ANY CONTRACT OR OTHER DOCUMENT WITH RESPECT TO WHICH THIS CERTIFICATE MAY BE ISSUED OR MAY PERTAIN, THE INSURANCE AFFORDED BY THE POLICIES DESCRIBED HEREIN IS SUBJECT TO ALL THE TERMS, EXCLUSIONS AND CONDITIONS OF SUCH POLICIES. LIMITS SHOWN MAY HAVE BEEN REDUCED BY PAID CLAIMS.

INSR LTR	TYPE OF INSURANCE	ADDL INSD	SUBR WVD	POLICY NUMBER	POLICY EFF (MM/DD/YYYY)	POLICY EXP (MM/DD/YYYY)	LIMITS	
A	X COMMERCIAL GENERAL LIABILITY CLAIMS-MADE X OCCUR GEN'L AGGREGATE LIMIT APPLIES PER: X POLICY PRO-JECT LOC OTHER:			PPK1751716	12/15/2017	12/15/2018	EACH OCCURRENCE	$ 1,000,000
							DAMAGE TO RENTED PREMISES (Ea occurrence)	$ 100,000
							MED EXP (Any one person)	$ 5,000
							PERSONAL & ADV INJURY	$ 1,000,000
							GENERAL AGGREGATE	$ 2,000,000
							PRODUCTS - COMP/OP AGG	$ 2,000,000
							Employee Benefits	$ 1,000,000
B	AUTOMOBILE LIABILITY X ANY AUTO OWNED AUTOS ONLY HIRED AUTOS ONLY SCHEDULED AUTOS NON-OWNED AUTOS ONLY			CA18015541	05/01/2018	05/01/2019	COMBINED SINGLE LIMIT (Ea accident)	$ 1,000,000
							BODILY INJURY (Per person)	$
							BODILY INJURY (Per accident)	$
							PROPERTY DAMAGE (Per accident)	$
							Uninsured motorist	$ 1,000,000
	UMBRELLA LIAB OCCUR EXCESS LIAB CLAIMS-MADE DED RETENTION $						EACH OCCURRENCE	$
							AGGREGATE	$
								$
B	WORKERS COMPENSATION AND EMPLOYERS' LIABILITY ANY PROPRIETOR/PARTNER/EXECUTIVE OFFICER/MEMBER EXCLUDED? (Mandatory in NH) Y/N If yes, describe under DESCRIPTION OF OPERATIONS below	N/A		WC17011444	05/01/2018	05/01/2019	X PER STATUTE OTH-ER	
							E.L. EACH ACCIDENT	$ 500,000
							E.L. DISEASE - EA EMPLOYEE	$ 500,000
							E.L. DISEASE - POLICY LIMIT	$ 500,000

DESCRIPTION OF OPERATIONS / LOCATIONS / VEHICLES (ACORD 101, Additional Remarks Schedule, may be attached if more space is required)

Re 111 4th Ave S., Nashville TN 37201. The Metro Gov't of Nashville & Davidson Co. Metro Legal & Claims c/o Ins. & Safety Division is named additional insured as respects to the general liability set forth.

CERTIFICATE HOLDER

The Metro Gov't of Nashville & Davidson Co. Metro Legal & Claims
c/o Ins. & Safety Division
222 3rd Ave. North Suite #501
Nashville TN 37201

CANCELLATION

SHOULD ANY OF THE ABOVE DESCRIBED POLICIES BE CANCELLED BEFORE THE EXPIRATION DATE THEREOF, NOTICE WILL BE DELIVERED IN ACCORDANCE WITH THE POLICY PROVISIONS.

AUTHORIZED REPRESENTATIVE

© 1988-2015 ACORD CORPORATION. All rights reserved.

ACORD 25 (2016/03) The ACORD name and logo are registered marks of ACORD

MHZC INSPECTIONS & FINAL APPROVALS
CALL 862-7970 FOR QUESTIONS AND TO SCHEDULE INSPECTIONS

1. Sign will be a minimum of 1' from the face of the building and will not exceed a total of 6' of projection.
2. There is no blinking, chasing, flashing or sequential lighting.
3. Sign is at least 25' from the nearest projecting sign.
4. Sign will not be more than 18" if it includes neon or internal lighting or 2" if it does not.
5. Sign shall not have any moving or spinning parts.
6. Sign must be inspected by MHZC staff prior to installation
7. Sign's bracket may not be installed into the storefront cornice. Must be installed into brick wall

Top of sign may not extend above the top of the structure's wall. It must end before the area of the cornice.

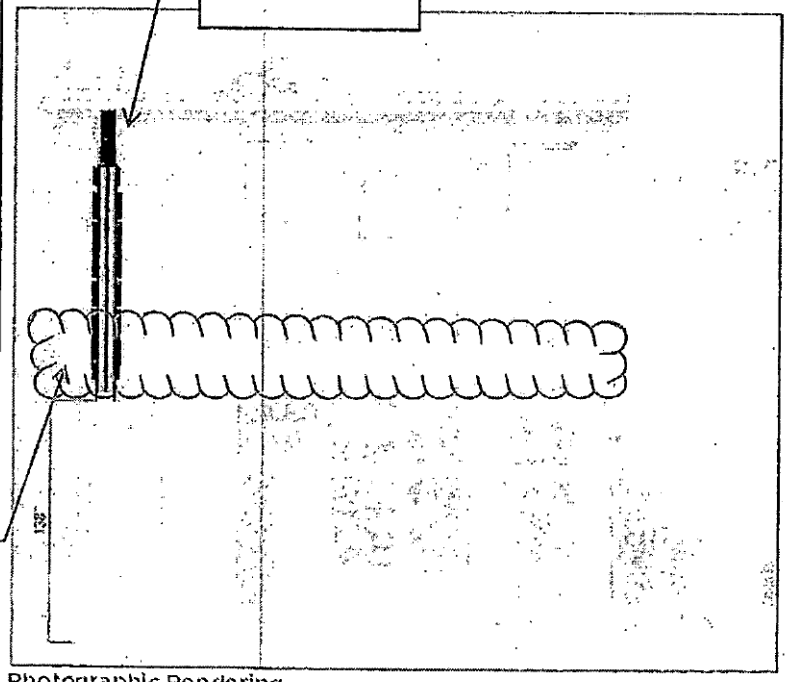

Sign bracket may not be drilled into the storefront cornice. It must be installed into the wall above the storefront cornice.

Photographic Rendering

Losers Projection Sign

Illuminated Neon Sign

SIGN ME UP

Losers

Jim Rowan

Frankie Courtney

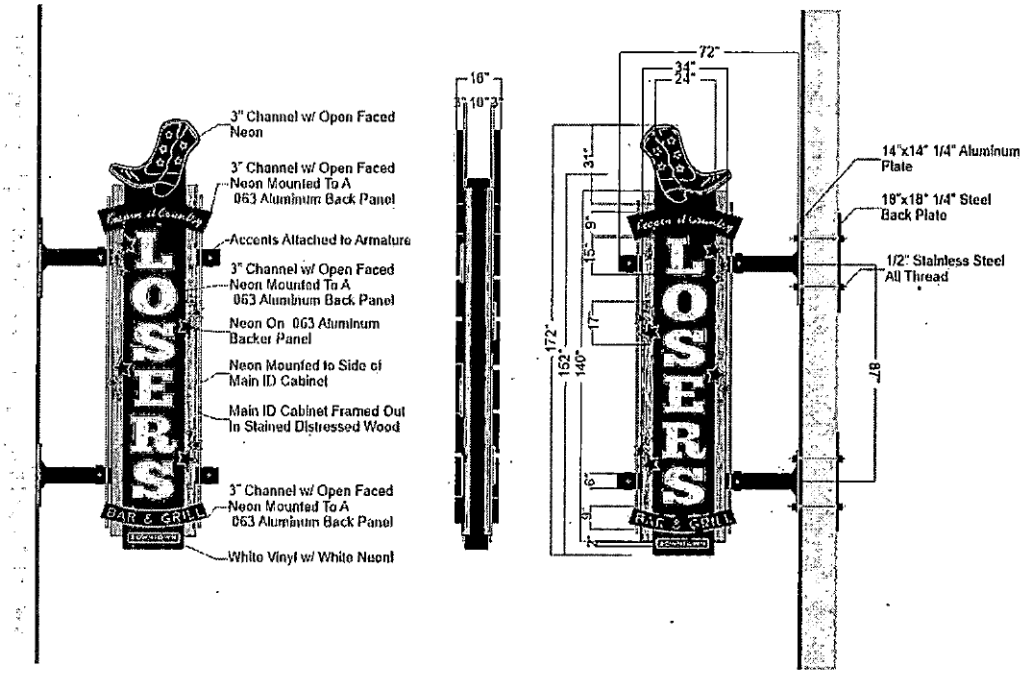

Projection Sign
Side A (Bridgestone Side)

Side View

Projection Sign
Side B (Bridgestone Side)

Losers Projection Sign

Illuminated Neon Sign

SIGN ME UP
2210 DUNN AVE. NASHVILLE, TN 37211 (615) 255-3825

DATE
8/1/2018

CLIENT
Losers

MANAGER
Jim Rowan

DESIGNER
Frankie Courtney